Iron Glider Bench/Chair
Assembly Instructions

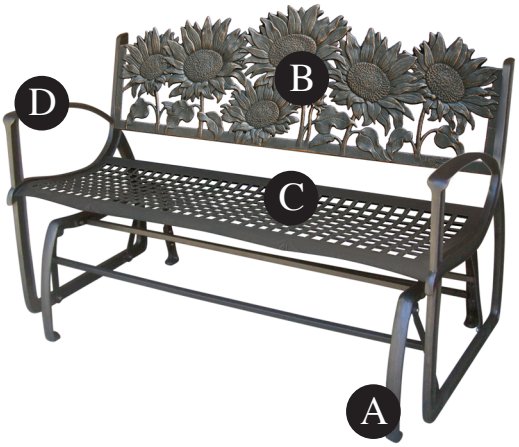

Parts List

A	Base frame	2
B	Backrest	1
C	Seat section	1
D	Seat side frame	2
	Base crossmembers	2
	Swing bars	2

*Hardware**

Stainless steel long bolts	8
Stainless steel short bolts	8
Lockut (black)	8
Flat washer (black)	8
Bolt combo (black)	8

** We provide one extra piece of all hardware.*

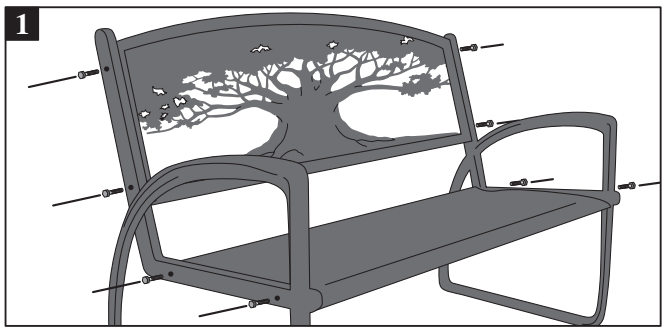

Step 1. Seat assembly. Holding the side frame sections in place, attach the backrest with the black bolt/washer/nut combos. Do not tighten. Position the seat section in place and secure with the remaining black hardware, then tighten all bolts.

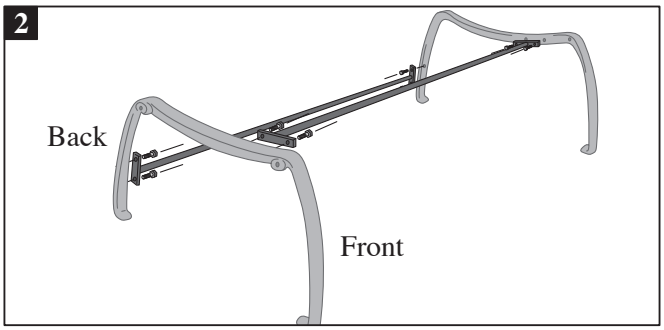

Step 2. Base assembly. Holding base frame sections in place, attach base crossmembers as shown in illustration 2 using two stainless steel short bolts for each side. Tighten.

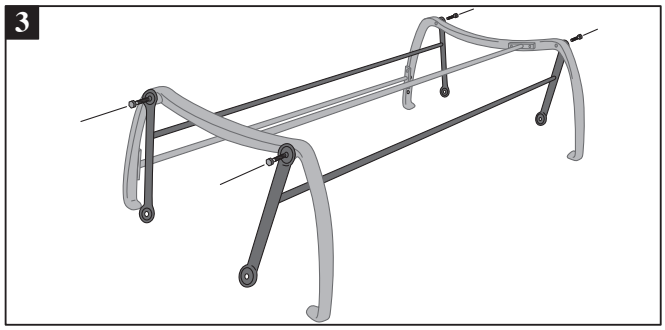

Step 3. Attach the swing bars to the outside of the base frame as shown using the stailess steel long bolts.

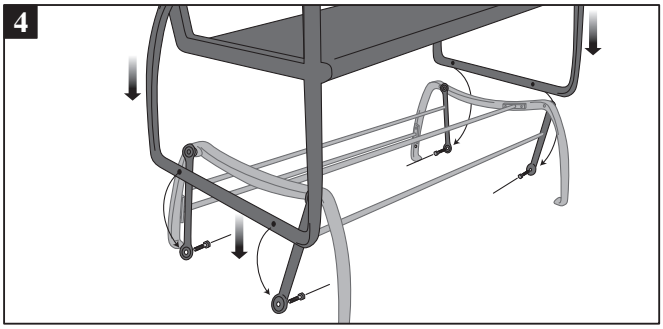

Step 4. Lower the completed seat section carefully over the base. Using the stainless steel long bolts, attach the seat side frame to the lower ends of the swing bars. Note that the section of the base frame containing the lowest crossmember bar is the back side.

Assembly Tips:

The weight and length of the parts makes this is a two person assembly.

To properly align cast iron product, all bolts should first be fastened to about one rotation from being snug. DO NOT "tighten as you go."

Do not overtighten. A small socket wrench is adequate. A power drill/socket is quicker, but also more likely to over-torque and damage the unit. It is also more likely to strip the powder-coat off of the hardware, allowing rust to form.

If the assembled unit does not sit solid on all 4 corners, loosen the bolts from step 2, have someone sit lightly on the seat, and retighten.

Maintenance Tip:

Although this is a maintenance-free product, there are steps you can take to keep it looking its best. Sun exposure will eventually break down any paint, even 2 layers of powder coat. Less sun exposure equals longer paint life. Partial shade placement, off season storage, etc. helps extend the life of the finish. If the product needs to be in the sun year-round, do so. That's what it was designed for.