72″ Cabinet

Diagrams with Dimensions
page 01 of 03

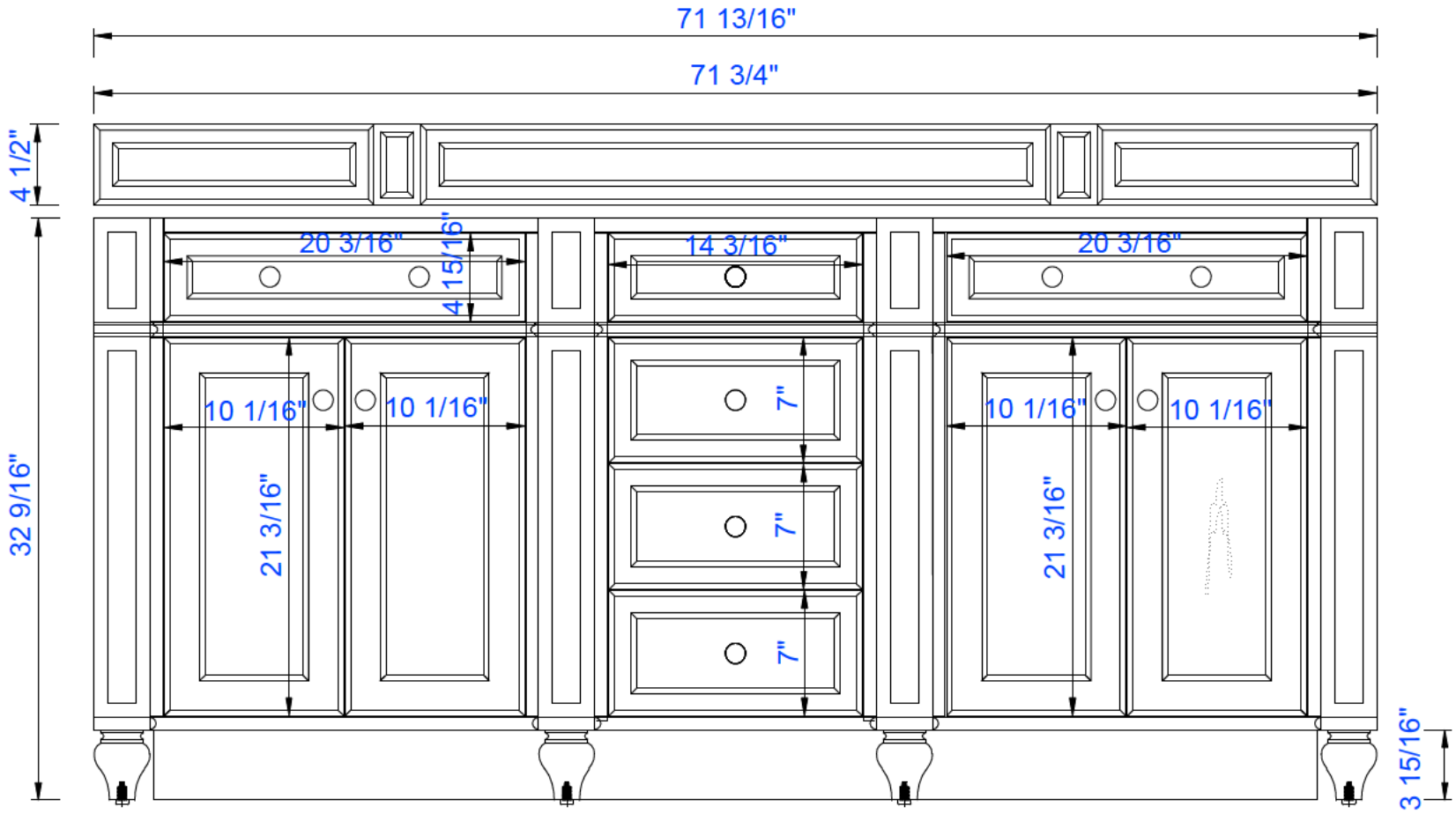

72″ Cabinet

Diagrams with Dimensions
page 02 of 03

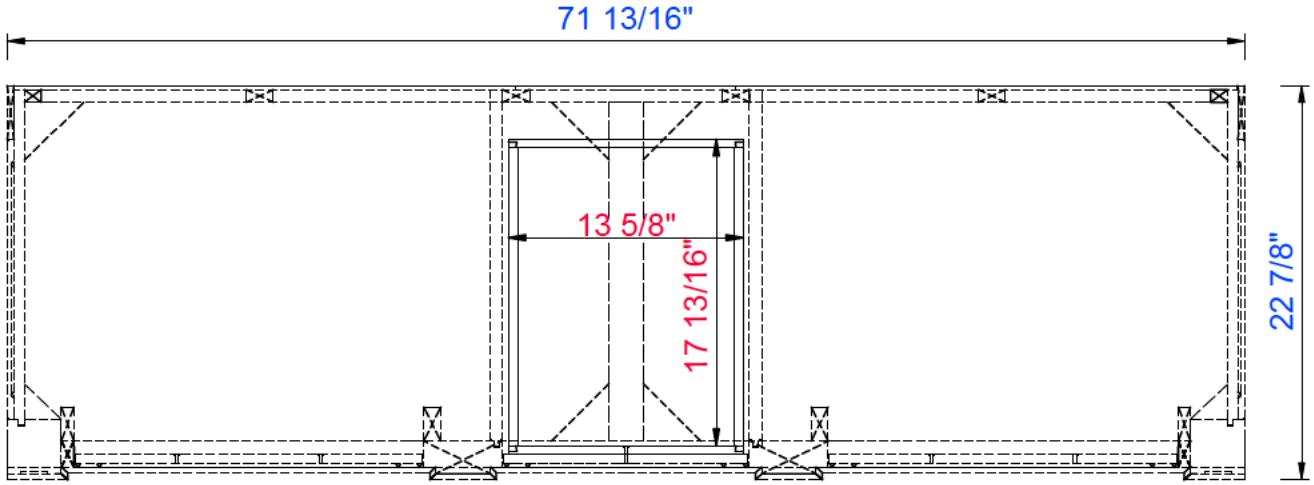

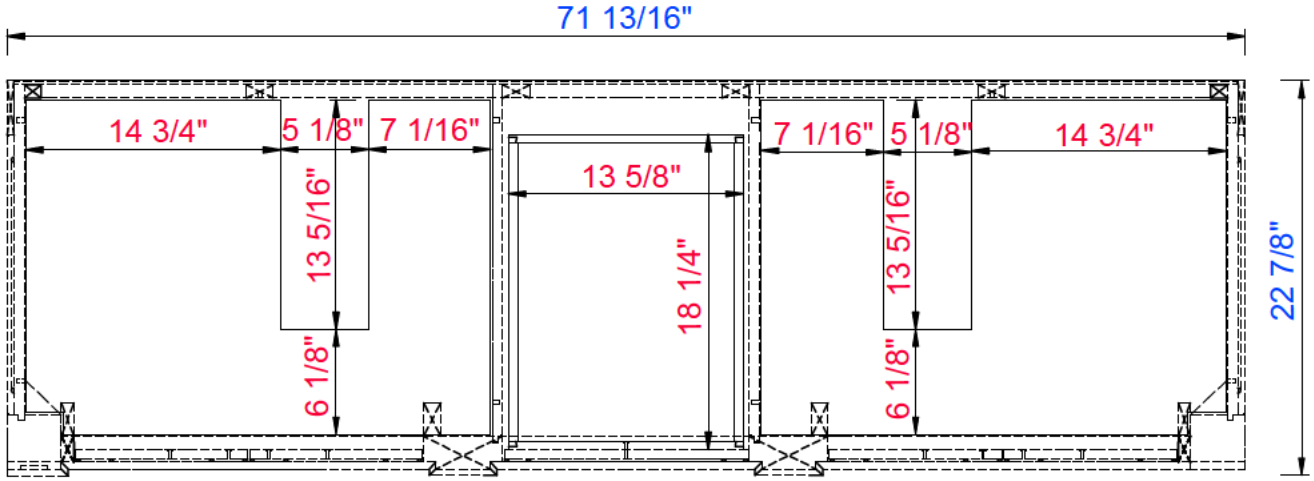

72″ Cabinet

Diagrams with Dimensions
page 03 of 03

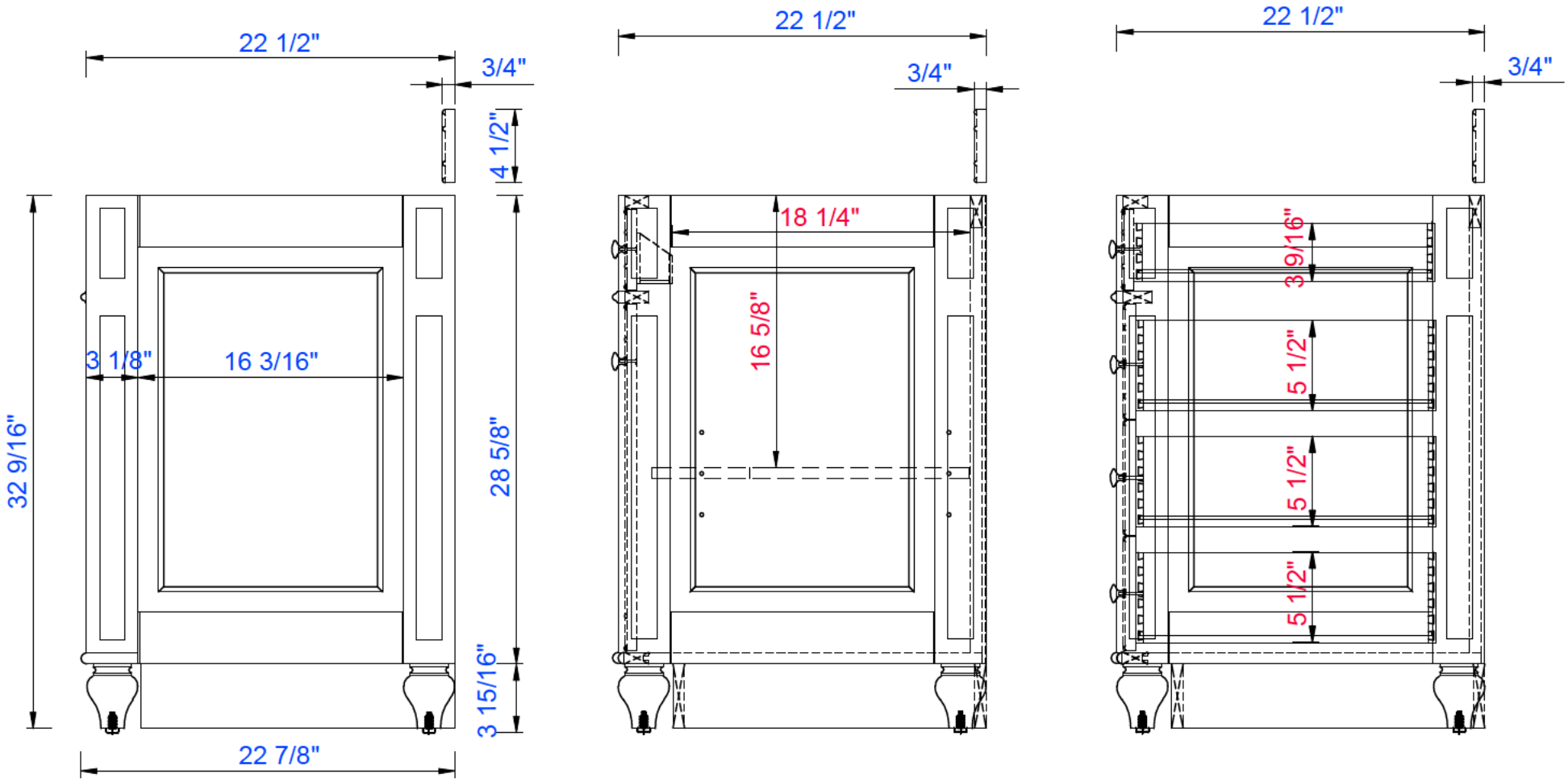

1828mm

1828mm Cabinet

Diagrams with Dimensions
page 01 of 03

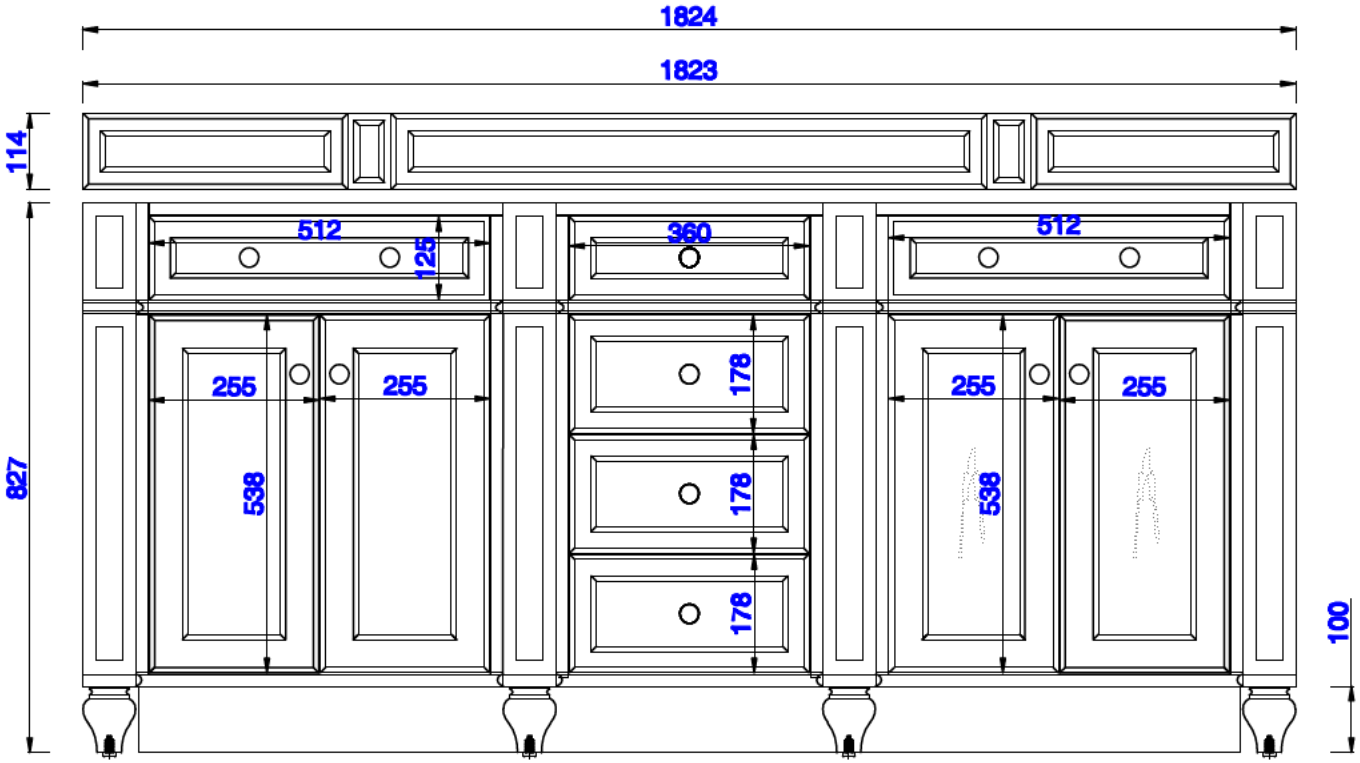

1828mm Cabinet

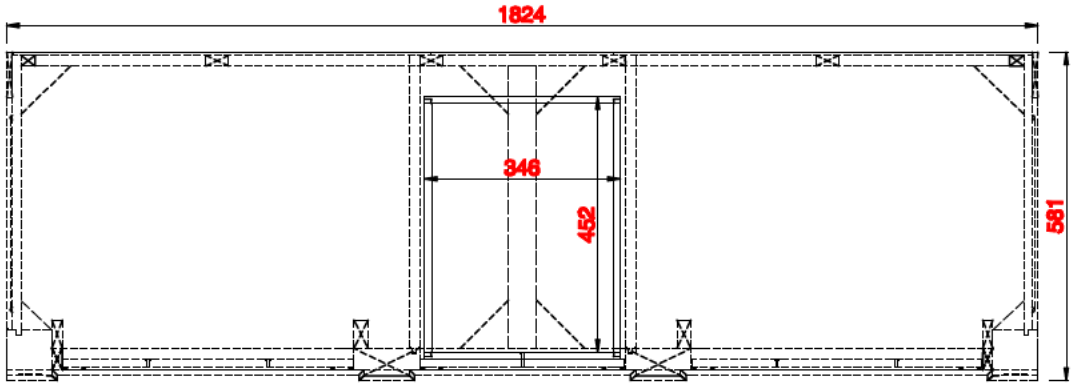

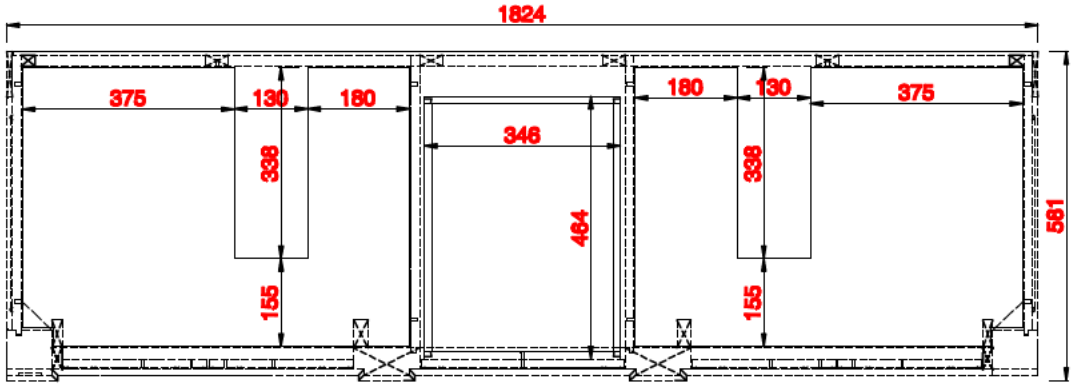

1828mm Cabinet
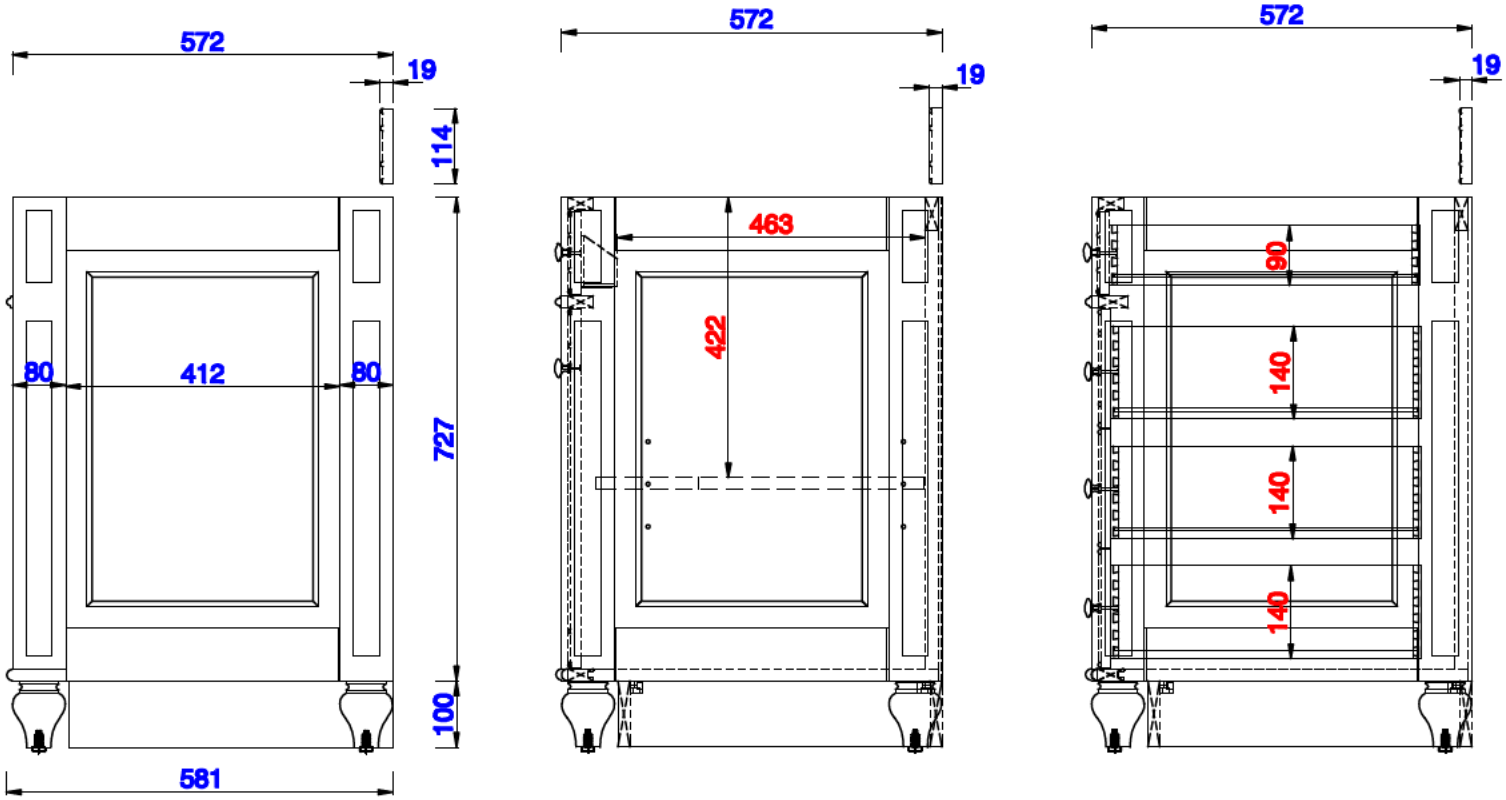
Diagrams with Dimensions
page 03 of 03