ASSEMBLY INSTRUCTION

A		Sucker	11PCS
B		1/4"*15mmL	4PCS
C		Base unit	1PC
D		Top glass	1PC

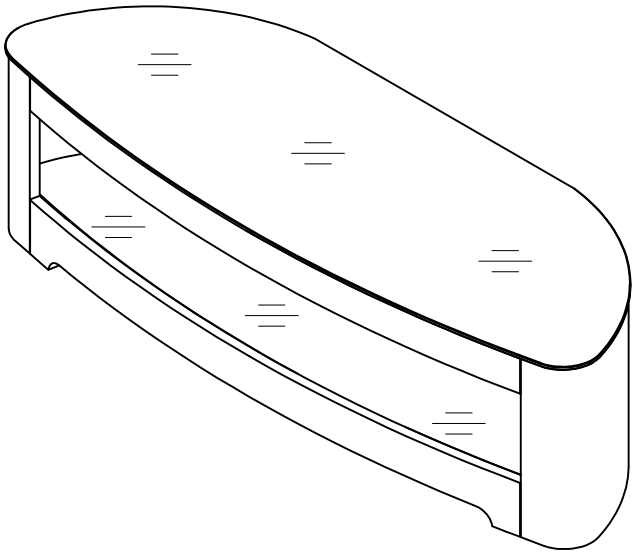

STEP1

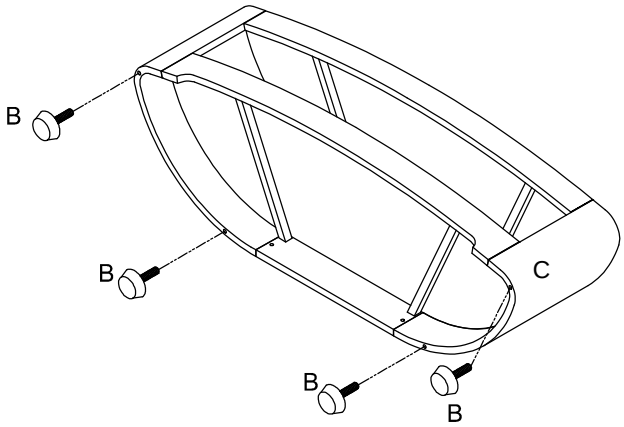

STEP2

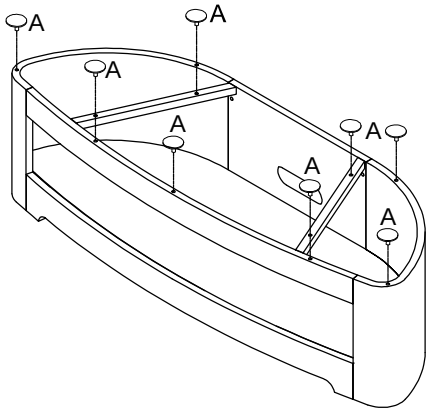

STEP3

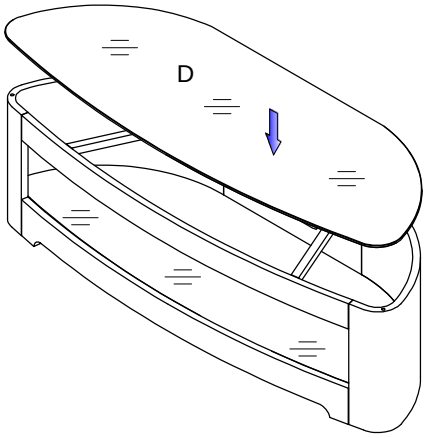
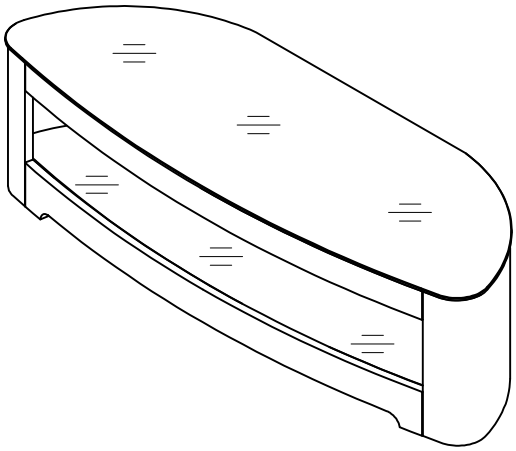
STEP4