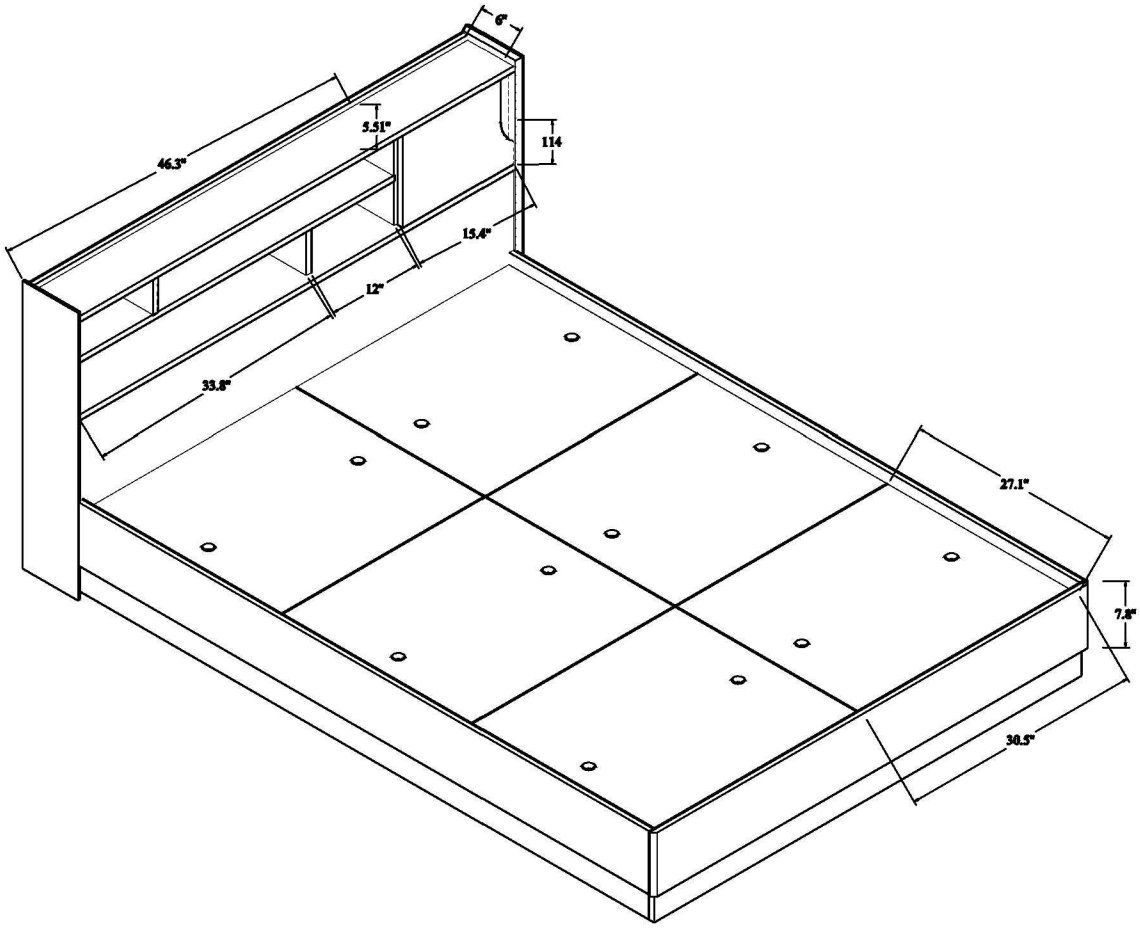
6"
46.3"
5.51"
114
15.4"
12"
33.8"
27.1"
7.8"
30.5"