INSTRUCTIONMANUAL

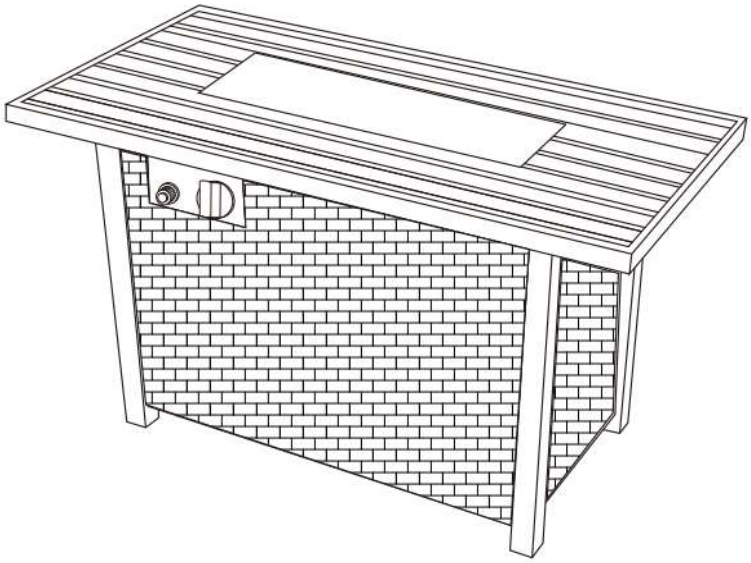

Outdoor Gas Fire Pit Table

IF YOU PURCHASED THE PRODUCT ONLINE AND HAVE

ANY QUESTIONS OR CONCERNS

PLEASE CONTACT US VIA EMAIL,TEXT,OR PHONE

Date of Manufacture: 25W43

TABLE OF CONTENTS

- Table of Contents.....2
- Warning and Cautions.....3-5
- Tools and Parts.....6-9
- Assembly.....10
- Lighting Operation..... 11-12
- Maintenance and Storage..... 13-14
- Trouble Shooting.....15

REMINDER

BEFORE ASSEMBLY

Verify that all parts are included with your gas fire pit BEFORE you begin assembly by checking the Parts and Hardware List. For your convenience, some parts may be pre-assembled or attached to heater components.

Leave hardware installed HALF-TIGHTENED on the gas fire pit during assembly until the unit is completely assembled, then finish tightening all hardware installed.

YOUR OWNER'S MANUAL

Keep and store this Owner's Manual for future reference -It contains important instructions and procedures for safety and maintenance.

WARNINGS AND CAUTIONS

Read the instructions before use. This appliance must be installed in accordance with enforced regulations and the following instructions.

⚠ CAUTION

Installer: Leave the manual with the user for future use.
Consumer: Please keep this manual for future reference.

⚠ DANGER

IF YOU SMELL GAS:
- **Shut off gas to the appliance.**
- **Extinguish any open flame.**
- **If odor continues, keep away from the appliance and immediately call your gas supplier or fire department.**

⚠ DANGER

CARBON MONOXIDE HAZARD
This appliance can produce carbon monoxide, which has no odor. Using it in an enclosed space can cause injury or death. Never use this appliance in an enclosed space such as a camper, tent or building.



⚠ WARNING

Never leave fire pit unattended when hot or in use.
Keep out of reach of children.

⚠ WARNING

Do not try to light this appliance without reading the "LIGHTING" instructions section of this manual.
Do not store or use gasoline or other flammable liquids or vapors in the vicinity of this or any other appliance. An LP cylinder not connected for use must not be stored in the vicinity of this or any other appliance. If the information in this manual is not followed exactly, a fire or explosion may result, causing property damage, personal injury or death.

⚠ WARNING

Improper installation, adjustment, alteration, service or maintenance can cause property damage, injury or death. Read the installation, operation and maintenance instructions thoroughly before installing or servicing this gas appliance.

⚠ WARNING

FOR OUTDOOR USE ONLY!

⚠ WARNING: FUELS USED IN LIQUEFIED PROPANE GAS APPLIANCES, AND THE PRODUCTS OF COMBUSTION OF SUCH FUELS, CAN EXPOSE YOU TO CHEMICALS INCLUDING BENZENE, WHICH IS KNOWN TO THE STATE OF CALIFORNIA TO CAUSE CANCER AND CAUSE BIRTH DEFECTS OR OTHER REPRODUCTIVE HARM. For more information go to: www.P65Warnings.ca.gov.

You must provide propane gas and a propane cylinder. Use a standard 20 lb. propane cylinder only.

Use this appliance only with a propane vapor withdrawal supply system. See Chapter 5 of the Standard for Storage and Handling of Liquefied Petroleum Gas, ANSI/NFPA 58. Your local library or fire department should have this book.

The pressure regulator and hose assembly supplied with the appliance must be used.

The installation must conform with local codes, or in absence of local codes, with National Fuel Gas Code, ANSI Z223.1.

A dented, rusted or damaged propane cylinder may be hazardous and should be checked by your cylinder supplier. Never use a propane cylinder with a damaged valve connection.

The LP-gas supply cylinder must be constructed and marked in accordance with the U.S. Department of Transportation (D.O.T) Specifications for LP-Gas Cylinders, or the standard for Cylinders, Spheres and Tubes for Transportation of Dangerous Good and Commission, CAN/CSA -B339, as applicable.

The LP-gas supply cylinder must be provided with a cylinder connection device compatible with the connection for the appliance.

The cylinder used must include a collar to protect the cylinder valve.

The LP-gas supply cylinder must be provided with a listed overfill protection device (OPD).

Do not store a spare LP Gas cylinder under or near this appliance.

Never fill the cylinder beyond 80 percent full.

For appliances designed to use a CGA No. 791 QCC connection.

Place the dust cap on the cylinder valve outlet whenever the cylinder is not in use.

Other types of caps or plugs may result in the leakage of propane.

Note Gas Supply Pressure: 25 to 250 PSI.

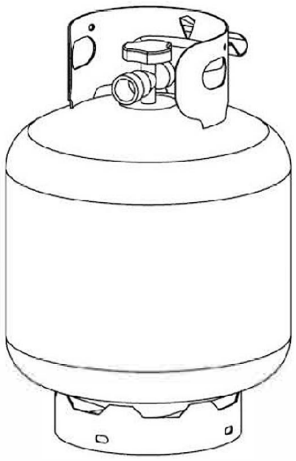

Standard 20 lb. tank

PLEASE READ THE FOLLOWING SAFETY RULES

WARNING:

The appliance is not for use with solid fuel.

The installation must conform with local codes or, in the absence of local codes, with the National Fuel Gas Code, ANSI Z223. 1/ NFPA 54, NFPA58 Natural Gas and Propane Installation Code, CSA B149.1, or Propane Storage and Handling CODE, B149.2.

The appliance, when installed, must be electrically grounded in accordance with local codes or, in the absence of local codes, with the National Electrical Code, ANSI/ NFPA 70, or the Canadian Electrical Code, CSA C22.1.

Prior to use, check for damaged parts such as hose, regulators, pilot or burner.

Inspect the fuel supply connection for signs of leakage (including the hose for LP models) before each use of the appliance.

All leak tests should be done with a soapy solution. NEVER USE AN OPEN FLAME TO CHECK FOR LEAKAGE.

Children and adults should be alerted to the hazards of high surface temperatures and should stay away to avoid burns or clothing ignition.

Young children should be carefully supervised when they are in the area of the appliance.

Clothing or other flammable materials should not be hung from the appliance or placed on or near the appliance.

Any guard or other protective device removed for servicing the appliance must be replaced prior to operating the appliance.

Installation and repair should be done by a qualified service person. The appliance should be inspected before use and at least annually by a qualified service person.

More frequent cleaning may be required as necessary . It is imperative that the control compartment , burners , and circ--ulating air passageways of the appliance be kept clean.

Keep the appliance area clear and free from combustible materials, gasoline and other flammable vapors and liquids.

DO NOT OBSTRUCT the flow of combustion and ventilation air.

Keep the ventilation opening(s) of the cylinder enclosure free and clear from debris.

The appliance shall be used only in a well-ventilated space and shall not be used in a building, garage, or any other enclosed area.

An appliance may be installed with shelter no more inclusive than: With walls on all sides, but with no overhead cover.

Within a partial enclosure that includes an overhead cover and no more than two side walls. These side walls may be parallel, as in a breezeway, or at right angles to each other.

Main parts

A. Table top

B. Door

C. Later panel

D. Front pane

E. Side panel

F. Left back leg (It has already been installed on the side panel)

G. Right back leg (It has already been installed on the side panel)

H. Metalstand

I. Table lid hook (It has already been installed on the side of the table)

J. Table lid

N. Control knob (preassembled)

O. Fire pit guard(preassembled)

P. Firebowl (preassembled)

Q.Burner(preassembled)

R. Electronic igniter (preassembled)

S. M6 x 15 screw(x4)

T. M6 x 30 screw (x12)

V. Glass beads

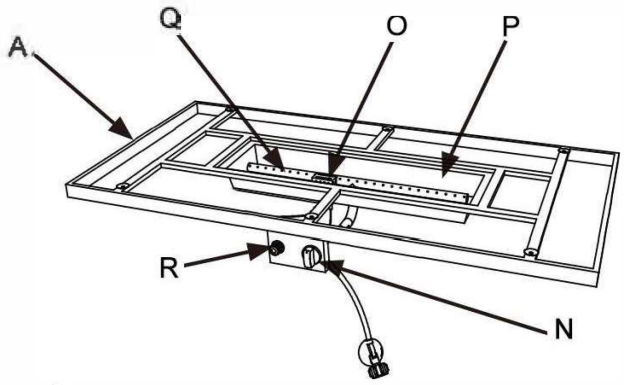

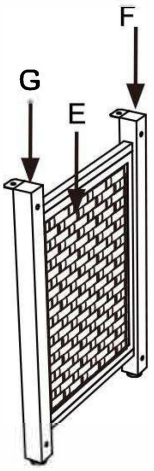

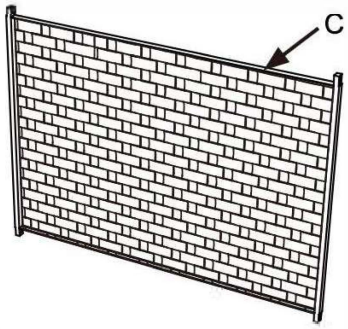

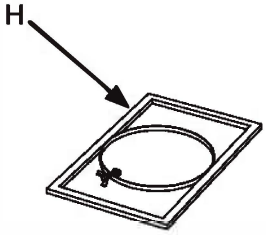

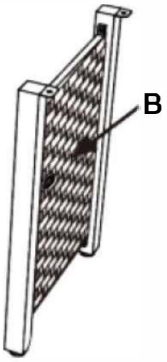

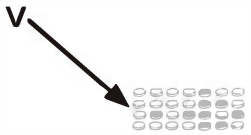

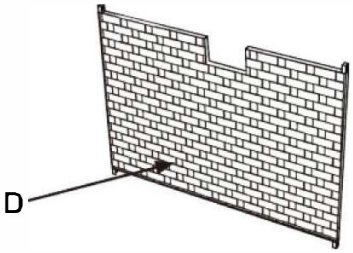





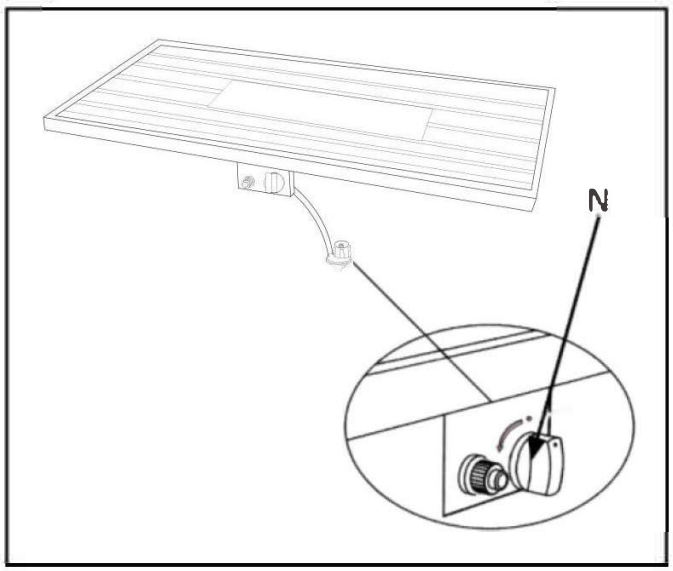

Checking the gas control

1.Check that the control knob (**N**) for the gas supply system is turned to the"OFF" position before starting any assembly.

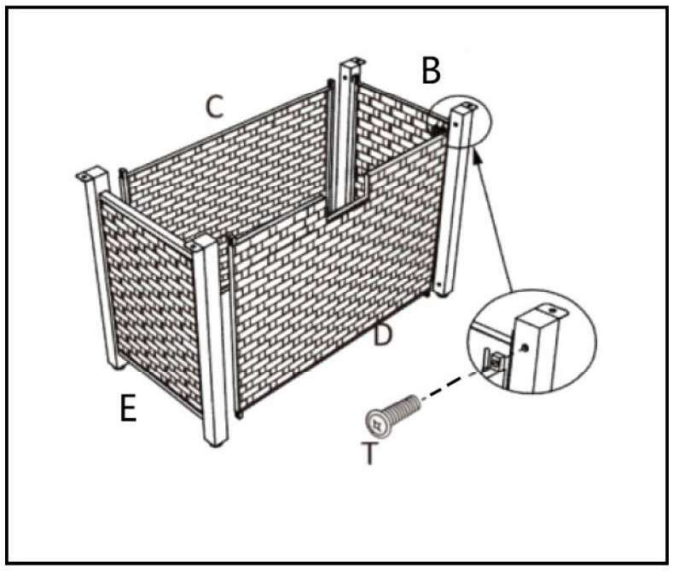

Attaching the later and front panel

2.Attach the later panel (C) and front panel (D)to the parts (B)(E) using
8 pcs M6x30 screws(T).
Keep the bolts loose.

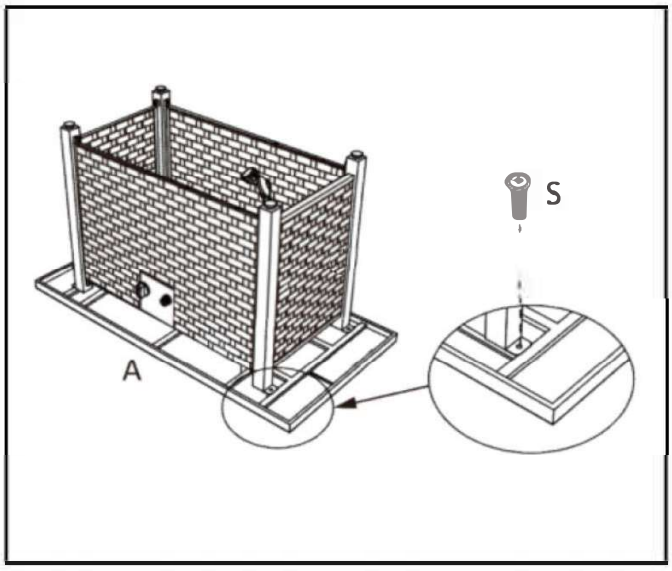

Attaching the tabletop

3.Attach table base to the bottom part of the table top (A) using
4 pcs M6x15 screws(S).
Keep the bolts loose.

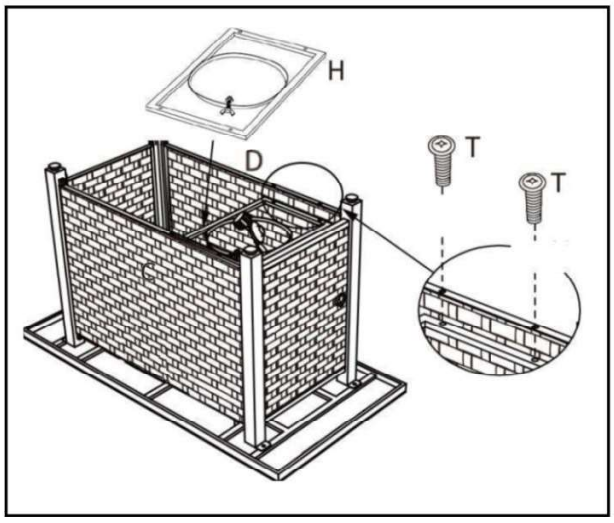

Attaching the panel

4. Attach the later panel (C) and front panel(D) to the metal stand (H) using 4 pcs M6 x 30 screws(T).

fully tighten allbolts now.

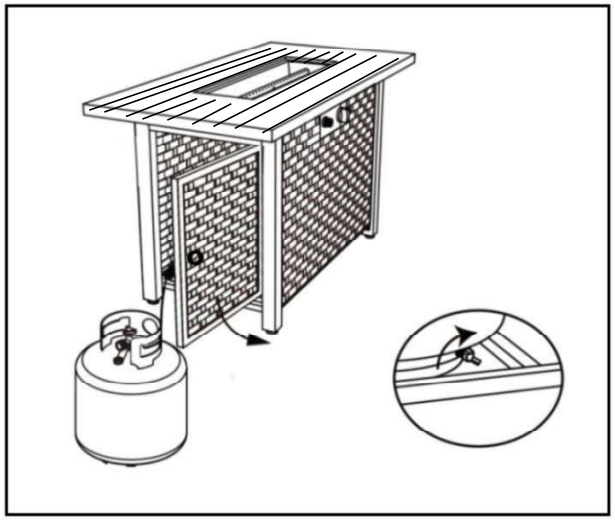

Securing the propane tank

5. Place propane gas tank (not included) into the metal stand (H). Make sure the gas tank sits on the metal stand completelv.
Turn the preassembled wing screw on the outer part of metal stand(H) clockwise to secure the propane gas.

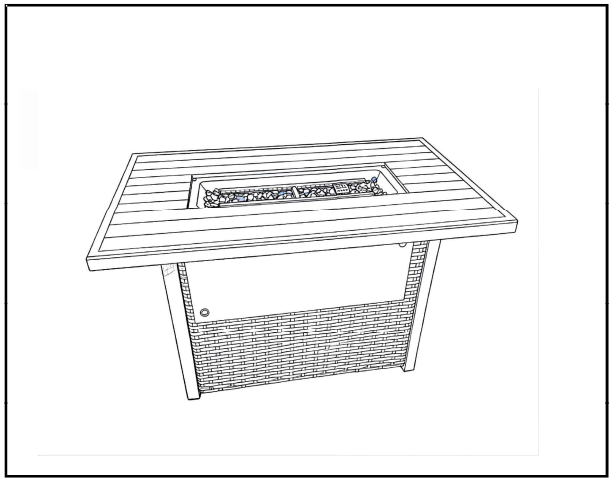

6. When starting the ignition, please remove the table lid and hang it on the side hook.
Please wait until the burner head cools down before covering the table lid.
It can be adjusted for stability by using the table leg pads.

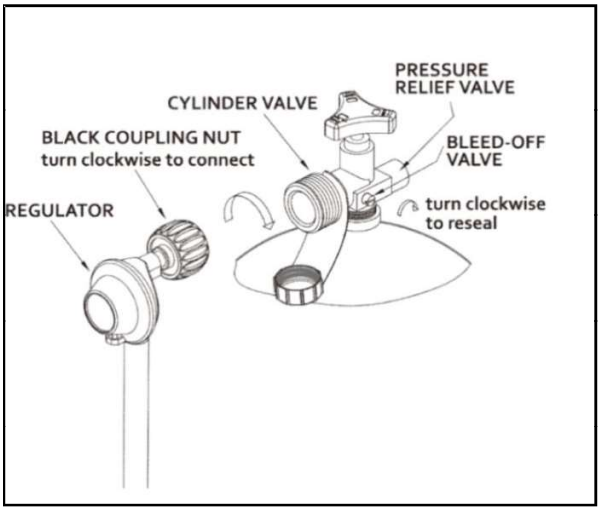

Attaching the regulator

7. Turn the cylinder valve on the tank clockwise to close the propane tank. Attach the preassembled regulator from the table top (B) to the cylinder valve by turning the regulator coupling nut clockwise. Make sure it is fastened securely and tighten connections by hand only. After connecting, secure gas hose to the bracket on the inside of the front panel.

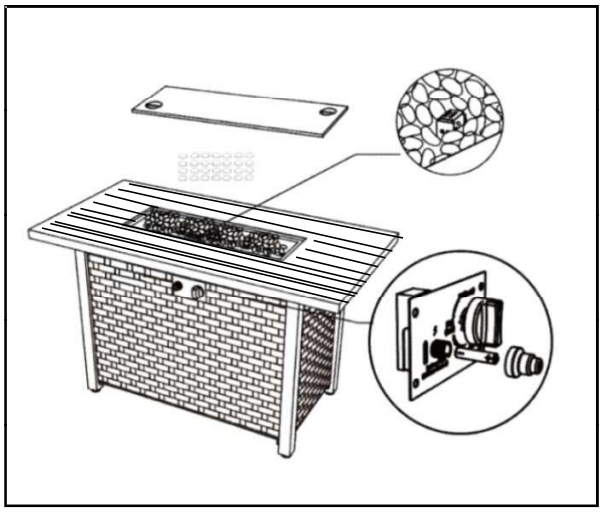

8. Open the igniter cover and put the battery into it, then tighten theigniter cover completely. Pour the glass beads (V) around the burner.Ensure glass beads are not placed on the ignition portion of theburner.

Place the lid (J) over the fire bowl. Thelid must be removed when the burneris in operation. Wait until the unit coolscompletely before place the lid.

NOTE:The product does not come with AAA batteries. You need to prepare them yourself!

OPERATION

WARNING: Never use this appliance for other than the intended use. Do not use this appliance to prepare food.

Initial Lighting: When lit for the first time, the appliance emits a slight odor. This is a normal temporary condition caused by the "burn-in" of internal paints and lubricants used in the manufacturing process and does not occur again. Simply run the main burner on high for approximately one-half hour.

WARNING:

•Children and adults should be alerted to the hazards of high surface temperatures and should stay away from the appliance to avoid burns or clothing ignition.
• Children should be carefully supervised when they are in the area of the appliance.
• Clothing or other flammable materials should not be hung from the appliance, or placed on or near the appliance. The area above the enclosure may be extremely hot. Direct contact with these surfaces should be avoided in order to prevent burns or clothing ignition.
• Any guard or protective device removed for servicing the appliance must be replaced prior to operating the appliance.
• Installation and repair should be done by a qualified service person.
• The appliance should be inspected before each use and at least annually by a qualified service person. More frequent cleaning may be required necessary. It is imperative that the control compartment, burners and circulating air passageways of the appliance be kept clean.

WARNING:

• Never use the appliance while it is raining. Always turn the appliance off when raining.
• Never use the appliance if the burner is damaged. Inspect the burner before each use.
• Ensure that no debris such as leaves; grass or other objects have entered or are on the appliance. If the burner is damaged it must be replaced prior to using the appliance with a replacement burner specified by your manufacturer.
• Inspect the hose assembly before each use. If there is evidence of excessive abrasion or wear, or if the hose is damaged it must be replaced prior to using the appliance with a replacement hose assembly specified by your manufacturer.

WARNING: Any modification to the appliance may compromise the safety of this appliance. Special concern is as followed:

•Do not bypass thermocouple safety.

•Do not operate the appliance if any parts have been underwater. Immediately call a qualified service technician to inspect the appliance and replace any parts of the control system and gas control, that has been underwater.

Lighting Instructions

1. Press and hold electronic igniter button.
2. Turn the burner control to the low position, press and hold in. When the burner lights, release the electronic igniter button.
3. Continue to depress the burner control knob for 30 seconds and then release. If the flame goes out, repeat the procedure.
4. Adjust the flame to the desired height with the burner control knob.
5. If the burner will not light with the electronic igniter, hold a lit long match or lit long butane lighter to the ignition area of the burner and continue with step 2.
6. To shut down the burner turn the burner control knob clockwise to the off position. Then turn the gas off at the source (propane cylinder valve or natural gas supply valve).

WARNING

FOR YOUR SAFETY:
Keep face and body away from burner area when lighting. Ensure burner controls are in the off position. Slowly turn on the gas supply valve.

WARNING

FOR YOUR SAFETY:
The propane cylinder is equipped with an excess flow device. Unless burners are turned off prior to turning the cylinder on, only small flames and low heat will be achievable.

WARNING

FOR YOUR SAFETY:
If the burner does not light turn the valve off and wait 5 minutes for any gas to dissipate before repeating the procedure.

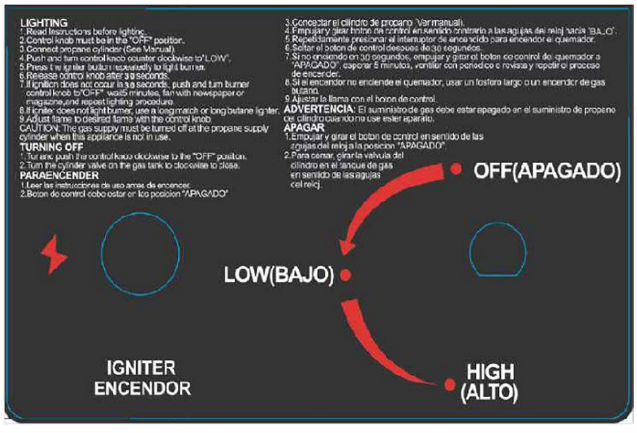

MAINTENANCE AND STORAGE

MAINTENANCE

To enjoy years of outstanding performance from your appliance, make sure you perform the following maintenance activities on a regular basis:

• **At least once a year, the unit should be inspected** for the presence of spiders, spider webs, or other insects.
• Air flow must be unobstructed. Keep controls, burner, and circulating air passageways clean. Signs of possible blockage include:
• Gas odor with extreme yellow tipping of flame.
• The appliance does NOT reach the desired temperature.
• Heat glow is excessively uneven.
• Heat makes popping noises.
• Spiders and insects can nest in burners or orifices. This dangerous condition can damage the appliance and render it unsafe for use. Clean burner holes by using a heavy-duty pipe cleaner. Compressed air may help clear away smaller particles.
• Carbon deposits may create a fire hazard. Clean reflector, thermocouple and emitter screen with a dry cloth if any carbon deposits develop.
• The burner is made from stainless steel, but extreme heat and a corrosive environment can cause surface corrosion to occur. Inspect the burner at least annually for cracks, insect nests, excessive corrosion or any other damage. If the burner is damaged, it must be replaced with a burner specified by the manufacturer before the appliance is put into operation.

STORAGE

Between uses

- Turn the control knob to "OFF" position.
- Disconnect LP source.
- Store appliance upright in an area sheltered from direct contact with inclement weather (such as rain, sleet, hail, snow, dust and debris).
- Cover appliance to protect exterior surfaces and to help prevent build up in air passages.

  NOTE: Wait until appliance is cool before covering.

During periods of extended inactivity or when transporting

- Turn the control knob to "OFF" position.
- Disconnect LP source and move to a secure, well ventilated location outdoors. DO NOT store in a location that will exceed 125 degrees F.
- Store appliance upright in an area sheltered from direct contact with inclement weather (such as rain, sleet, hail, snow, dust and debris).
- Cover appliance to protect exterior surfaces and to help prevent build up in air passages.

  NOTE: Wait until appliance is cool before covering.

TROUBLE SHOOTING

PROBLEM	PROBABLE CAUSE	SOLUTION
Low heat / Low flame when valve turned to high.	For propane- improper lighting procedure.	Ensure lighting procedure is followed carefully. The valve must be in the off position when the tank valve is turned on. Turn tank on slowly to allow pressure to equalize. See lighting instruction. Pipe must be sized according to installation code.
Burners bum with yellow flame, accompanied by the smell of gas.	Possible spider web or other debris.	Thoroughly clean burner venturi. See general maintenance instructions.
Burner will not light with the igniter, but will light with a match.	Dead battery / or installed incorrectly. Loose electrode wire or switch terminal wires.	Replace with heavy duty battery. Check that electrode wire is firmly pushed onto the terminal on the back of the igniter. Check that the lead wires from the module to the ignition switch (if equipped) are firmly pushed onto their respective terminals.
Burner will not stay lit when control knob is released.	Knob not being held in long enough. Too windy. Flame glass or debris in ignition area of the burner preventing thermocouple from being fully engulfed in flame. Dirty thermocouple or thermocouple connection. Faulty thermocouple or valve.	Thermocouple mush have time to heat up-hold the knob in for 30 seconds after the burner lights, then release. Unit will shut down if winds are greater than 10mph (16km/h). Either locate to different area or use when it is less windy. Ensure there is no flame glass or other debris in ignition area, and that the small hole below the thermocouple is unobstructed. Clean the thermocouple and clean the connection between the valve and thermocouple. Ensure the connection is properly tightened. Replace thermocouple and / or valve.
Humming regulator.	Normal occurrence on hot days.	This is not a defect. It is caused by internal vibrations in the regulator and does not affect the performance or safety of the appliance. Humming regulators will not be replaced.
Burner output on "high" setting is too low. (Rumbling noise and fluttering blue flame at burner surface.)	Lack of gas. Supply hose is pinched. Dirty or clogged orifice. Spider webs or other matter in venturi tube. Propane regulator in "low flow" state.	Check gas level in propane cylinder. Reposition supply hose as necessary. Clean burner orifice. Clean out venturi tube. Ensure lighting procedure is followed carefully. All valves must be in the off position when the tank valve is turned on. Turn tank on slowly to allow pressure to equalize. See lighting instructions.