ASSEMBLY INSTRUCTIONS

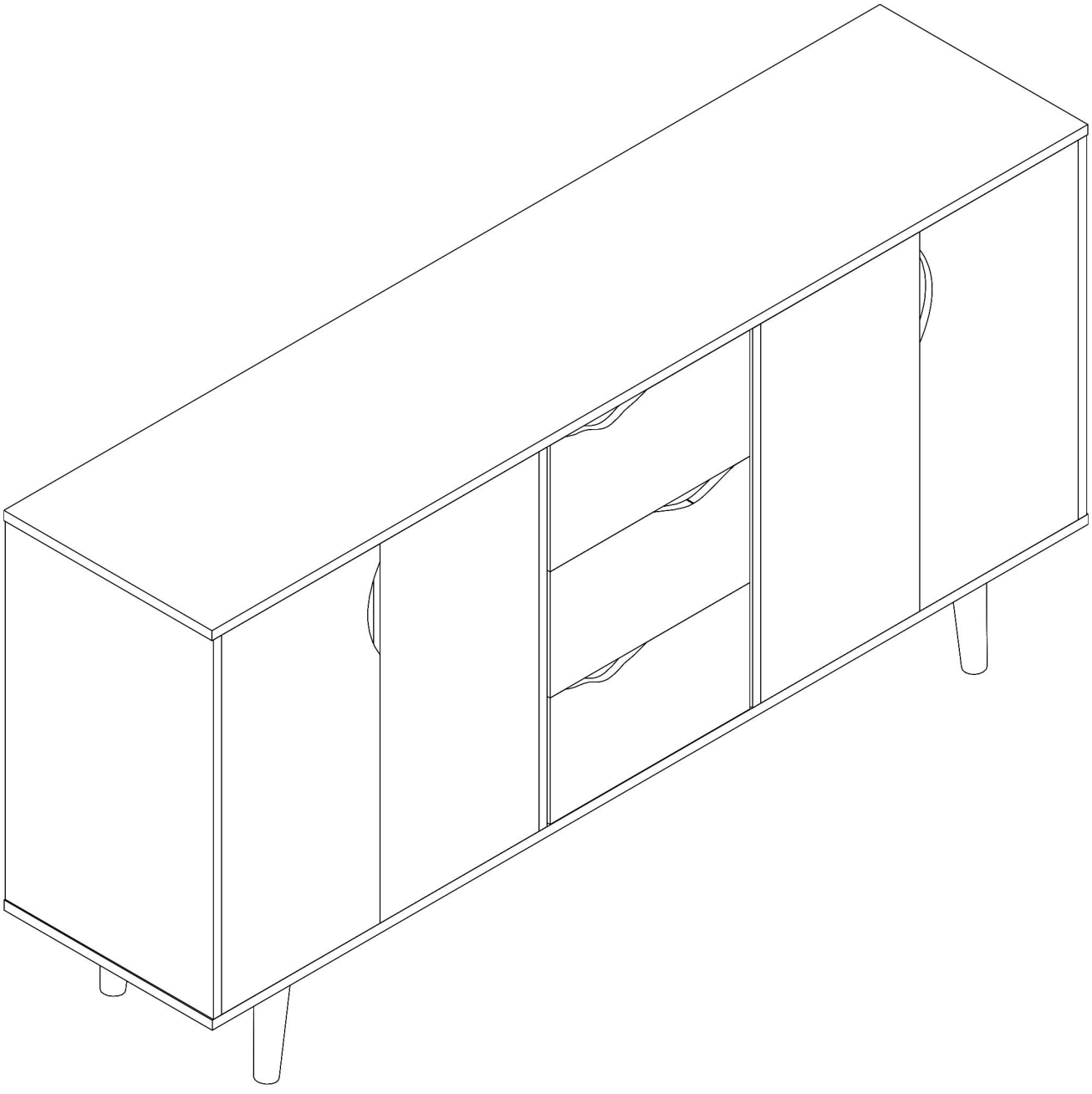

1. Thank you for choosing ***our products.***

2. Return Policy



DO NOT RETURN TO THE STORE! Skip the process of returning your product and contact us directly for a replacement

If you find that parts of your order are missing or damaged, we will gladly ship any needed replacement parts free of charge.

If your product's quality does not meet your expectations or you have found any sort of defect, please contact our customer service department and let us know the details of your order and any issues encountered, we will try our best to provide you with a solution. Feel free to also directly contact our manufacturer concerning needed replacement parts and they will be happy to help provide you with a solution or answer any questions you may have.

Recommendations Before Beginning Assembly

 • Read instructions, cover to cover

 • Have 2-4 adults on hand for assembly depending on product size

 • Do not assemble directly on flooring or carpet

 • Assemble on a clean non-marring surface (example: packing foam)

 • Save all packaging until finished

3. Assembly Notice:

- If you encounter any problems during assembly and find that you cannot continue, rest assured we will help you solve the situation as soon as possible. Simply keep all of the parts of the product stored in a safe place and contact us immediately so we may assist you further.
- Once you have opened your package, remove all inner hardware packages and take the parts out. One by one, Place the parts out neatly in front of you, then refer to the instructions to ensure no parts are missing. If any pieces are found missing, please carefully look in the box first, as the hardware packaging might have torn making the

hardware spill in the box.

- Some key parts of your product may be stored and hidden inside of other parts. Please open any zippered or hook & loop storage compartments to remove all parts. (example: cushions and legs being stored in the underside of a sofa)
- IMPORTANT: When setting up your product, DO NOT INSTALL THE SCREWS ALL THE WAY IN THE BEGINNING. Place each screw into their proper hole and use your hand to twist the screw halfway. Twist all the screws in halfway to ensure the holes will match up properly and the product is level on the ground. When everything seems fitted, then tighten the screws.
- When you have completed assembly, we suggest you have more than one person to assist you with lifting and placing the product.

Care & Maintenance



Do not put hot items directly on furniture surface



Do not clean furniture with harsh cleansers or polish



Do not place furniture under direct sunlight



Do not place furniture near heating or cooling vents



Do not write on furniture without a padded barrier to protect the surface



Do not place furniture outside. For indoor use only



Not for commercial use. For residential use only



Stains may be removed with mild soap solution and damp cloth



Children should not climb or jump on the furniture



Dust and pick-up spills using a clean, non-colored, lint-free cloth

Caution

● This product contains small components. Please ensure that they are kept away from small children.

● Do not use power tools to assemble your furniture. Power tools may strip or damage the parts.

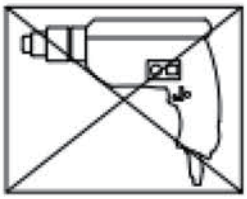

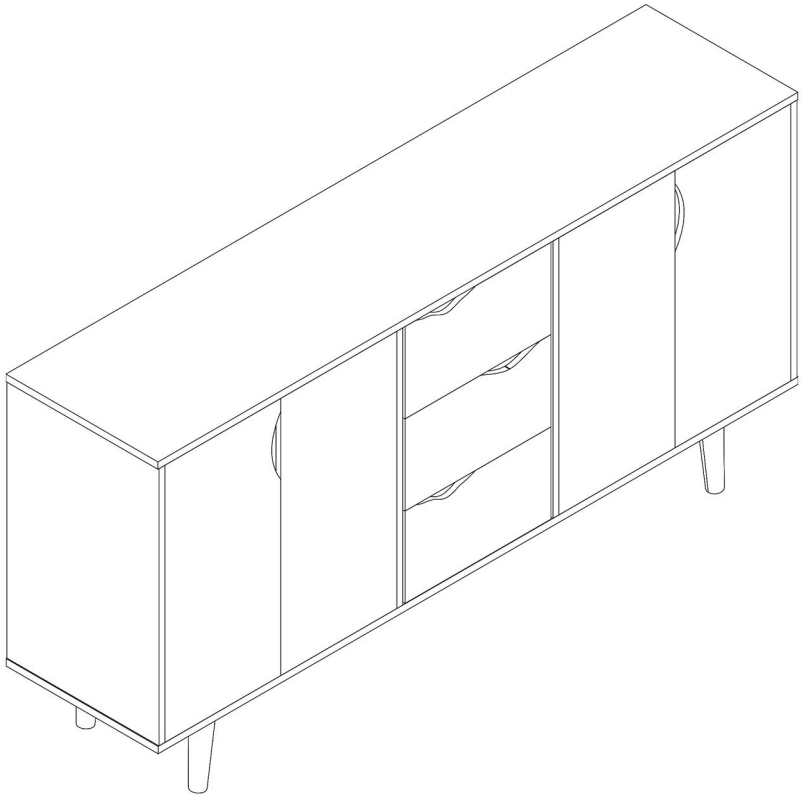

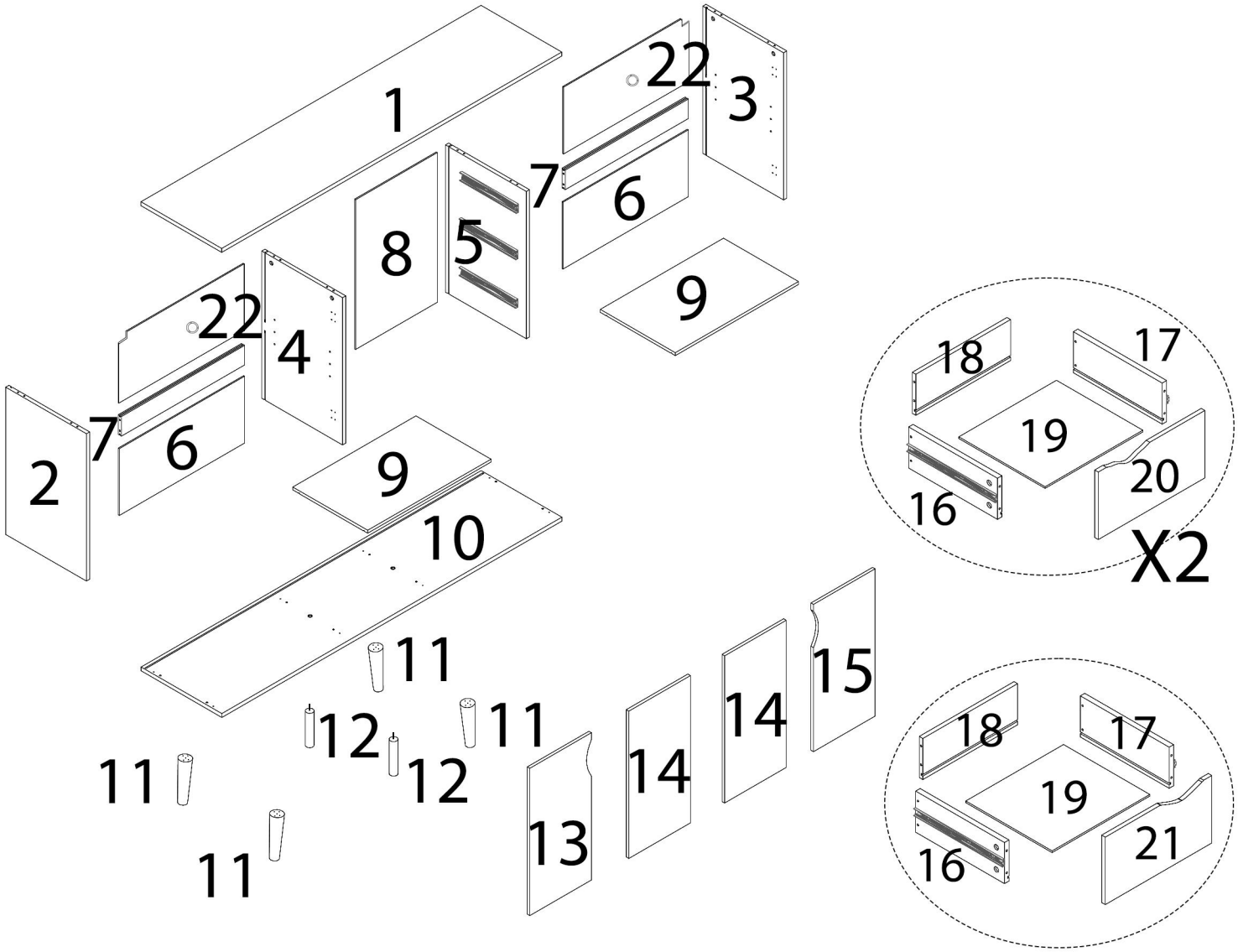
1
22
3
7
6
8
5
9
22
4
7
6
2
9
10
11
12
11
12
11
11
13
14
14
15
18
17
19
16
20
X2
18
17
19
16
21

① 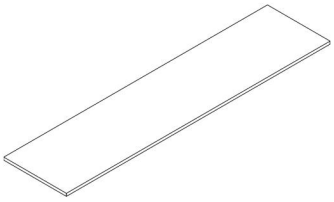 ×1	② 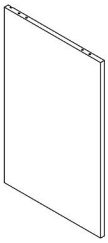 ×1	③ 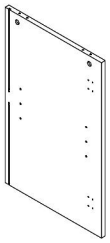 ×1	④ 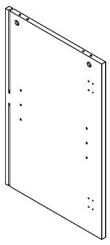 ×1
⑤  ×1	⑥ 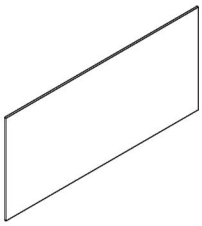 ×2	⑦ 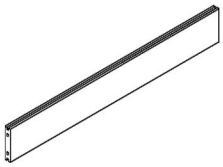 ×2	⑧ 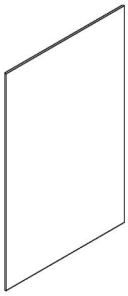 ×1
⑨ 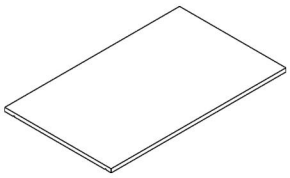 ×2	⑩ 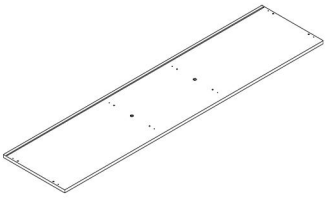 ×1	⑪  ×4	⑫  ×2
⑬ 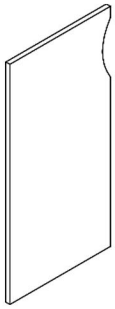 ×1	⑭  ×2	⑮ 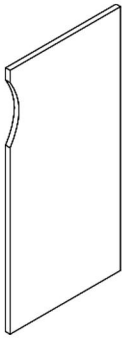 ×1	⑯ 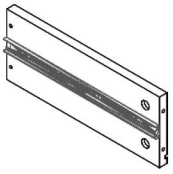 ×3
⑰ 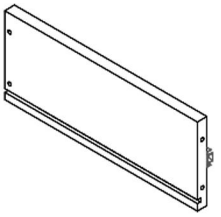 ×3	⑱ 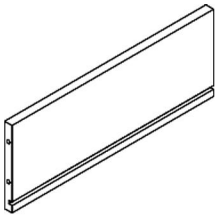 ×3	⑲ 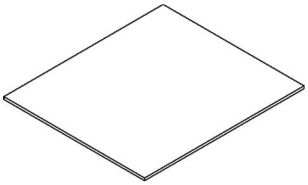 ×3	⑳ 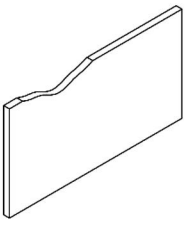 ×2

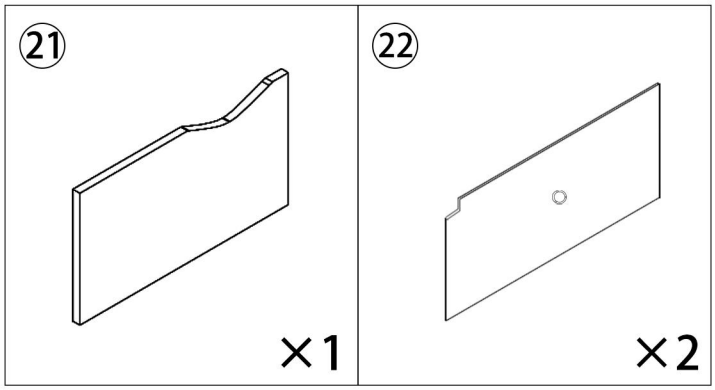
21
×1
22
×2

 Ø6x35mm		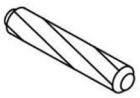 Ø 6x25mm	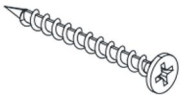 Ø 4x40mm	 Ø 6x16mm
AX28	BX28	CX16	DX8	EX16
 Ø 3.5x18mm	 Ø 3.5x14mm			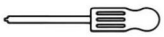
FX20	GX24	HX2	IX8	JX1
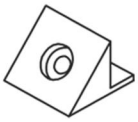	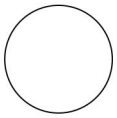	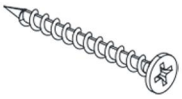 Ø 4x30mm	 Ø 4x14mm	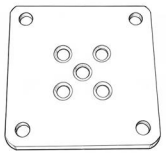
KX20	LX12	MX12	NX48	OX4
 P1  X2 4x14mm P2  4x35mm P3  P4		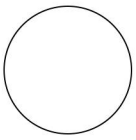	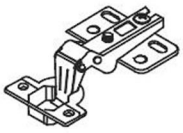	
PX2		QX4	SX8	

STEP 1

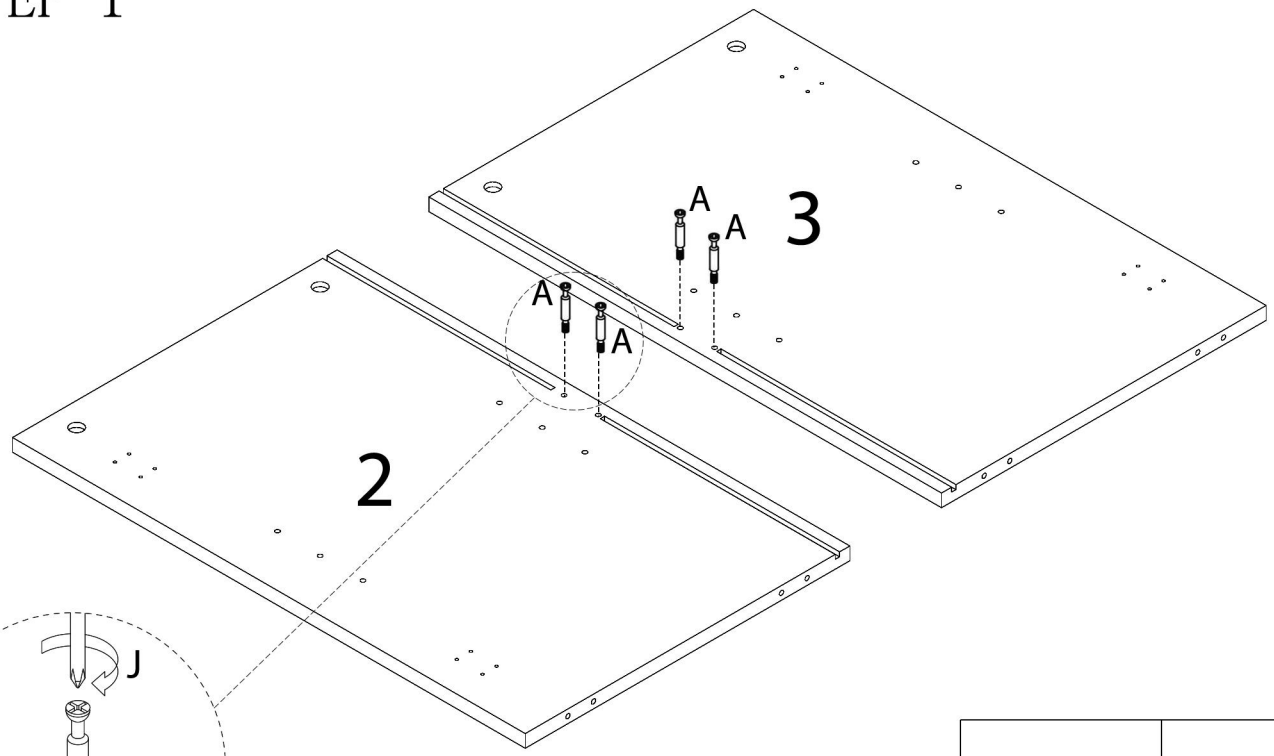

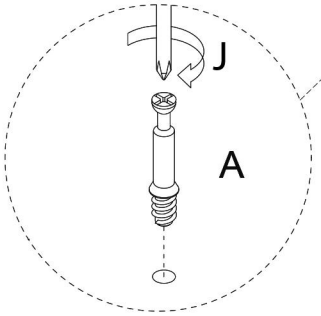

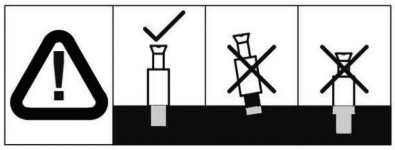

 Ø6x35mm	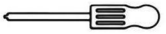
AX4	JX1

STEP 2

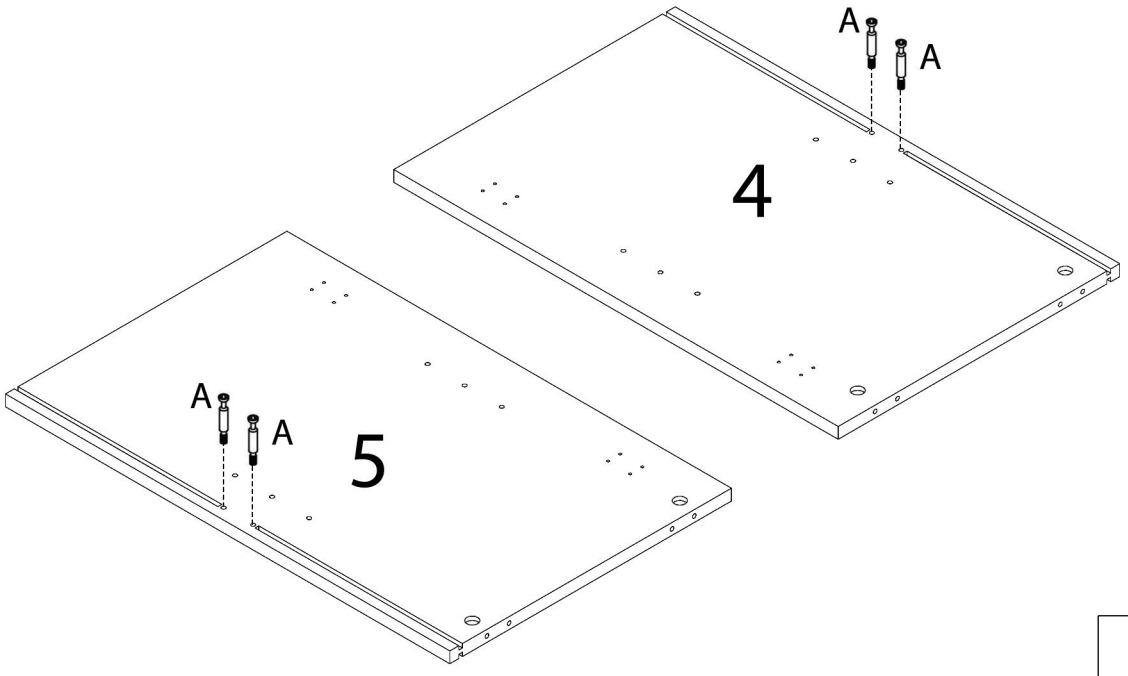

 Ø 6x35mm
AX4

STEP 3

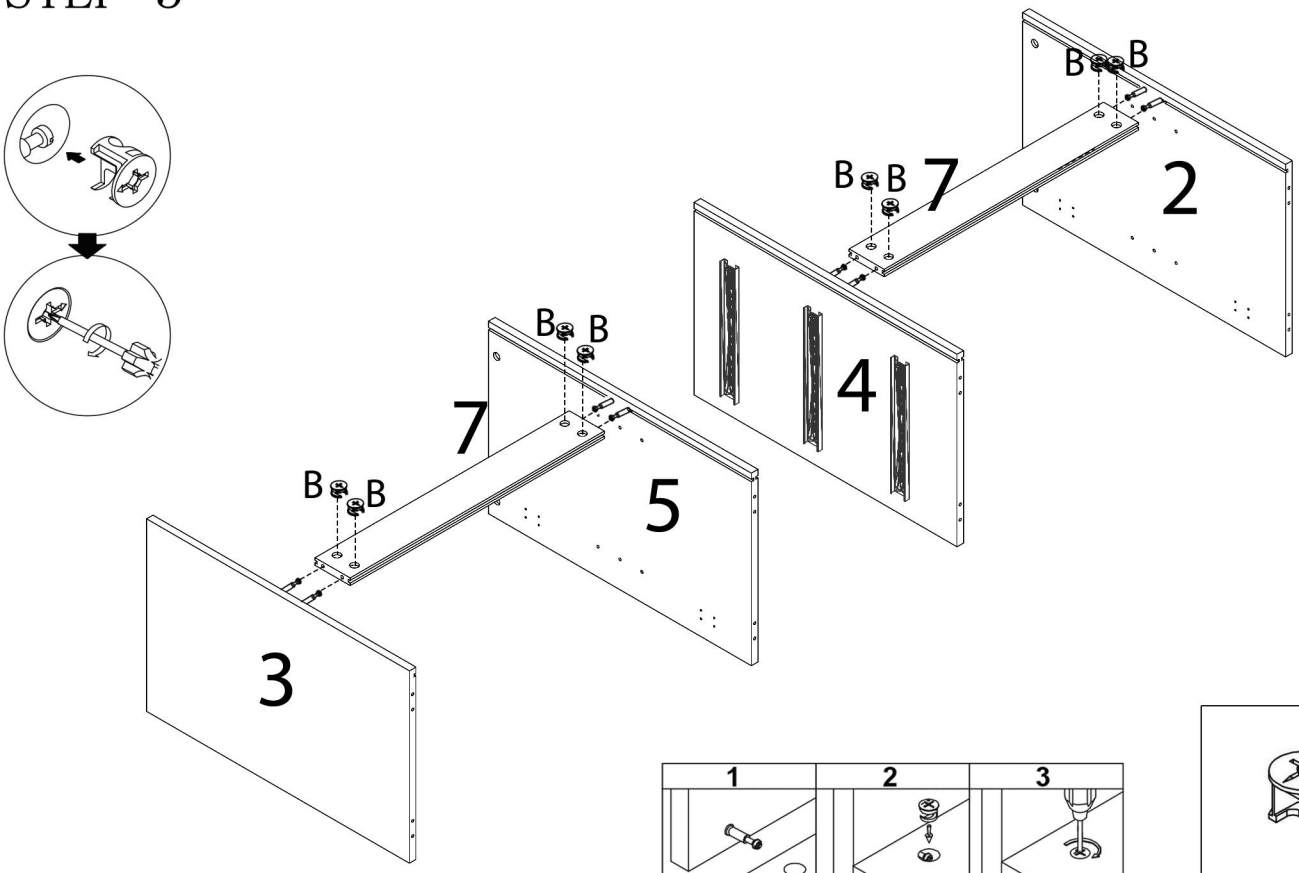

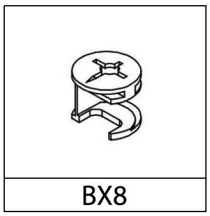

STEP 4

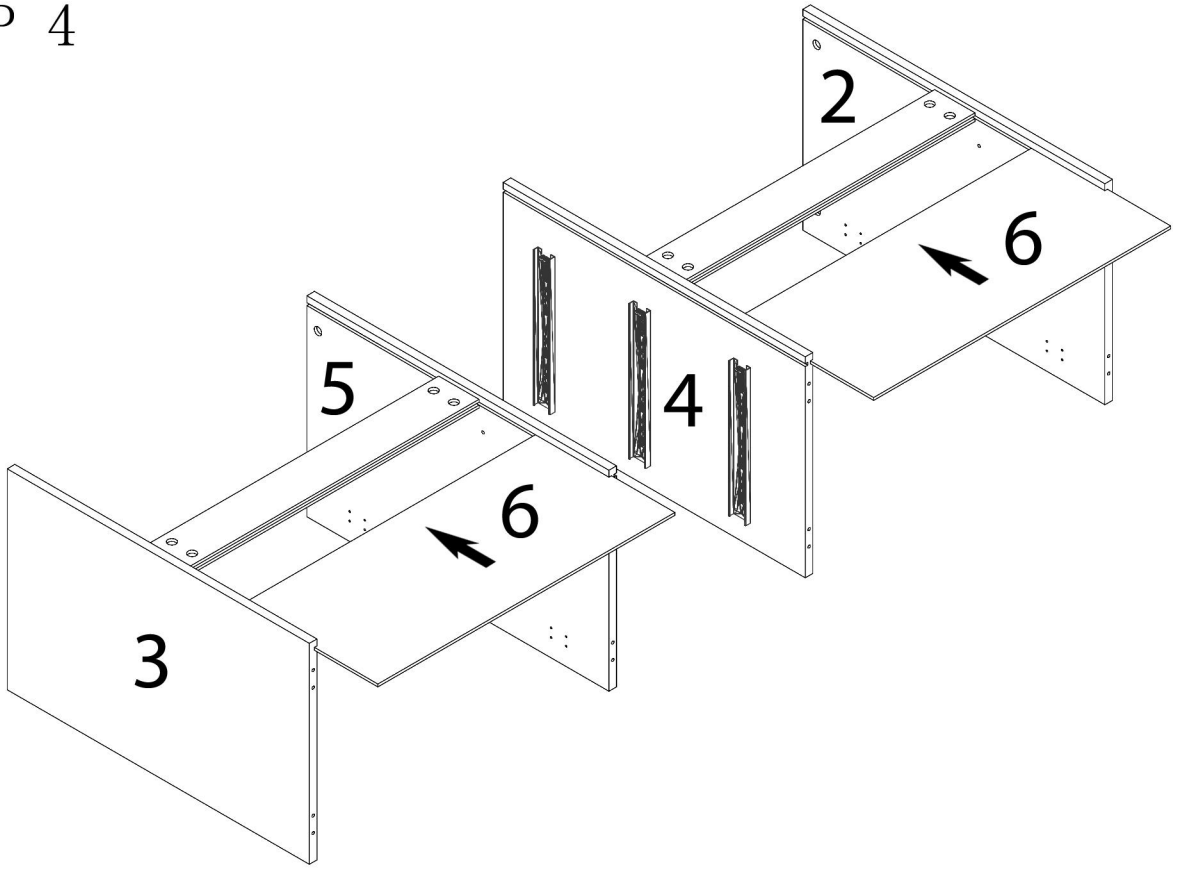

STEP 5

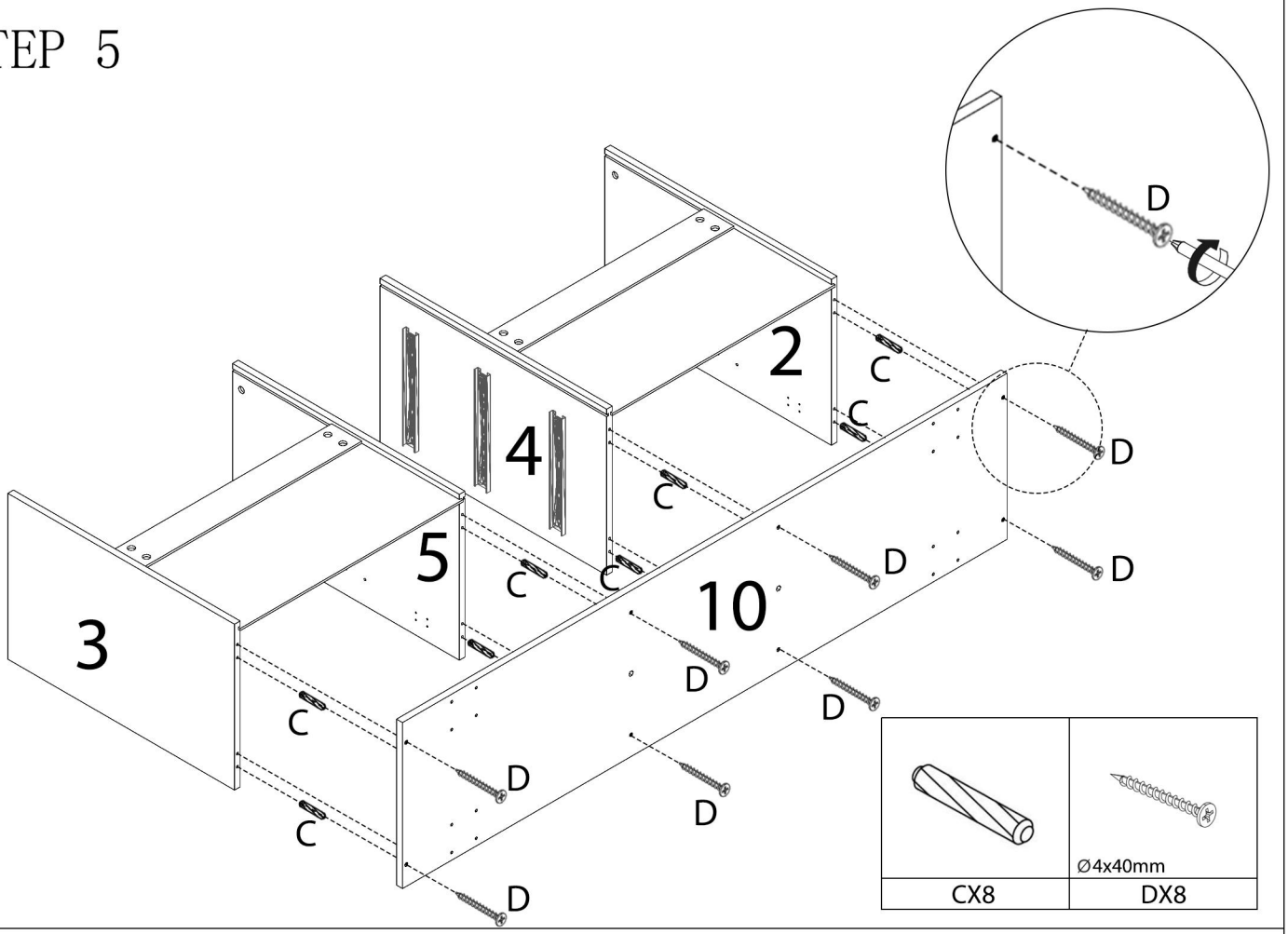

CX8	Ø4x40mm DX8

STEP 6

Pay attention to the front/back

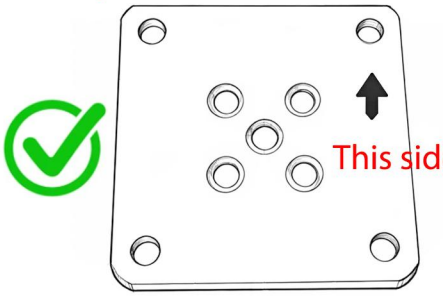

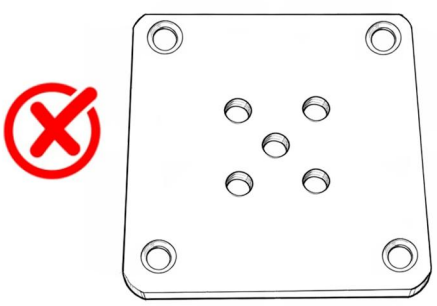

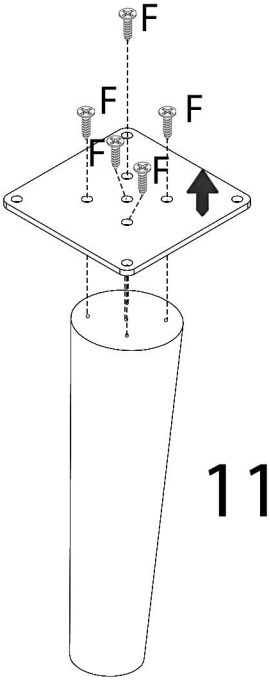

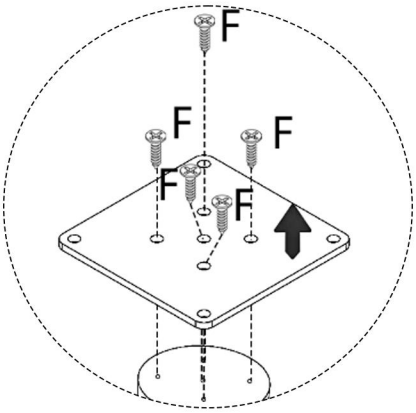

11

X4

OX4
Ø3.5x18mm FX20

STEP 7

Make sure the legs are facing the correct direction

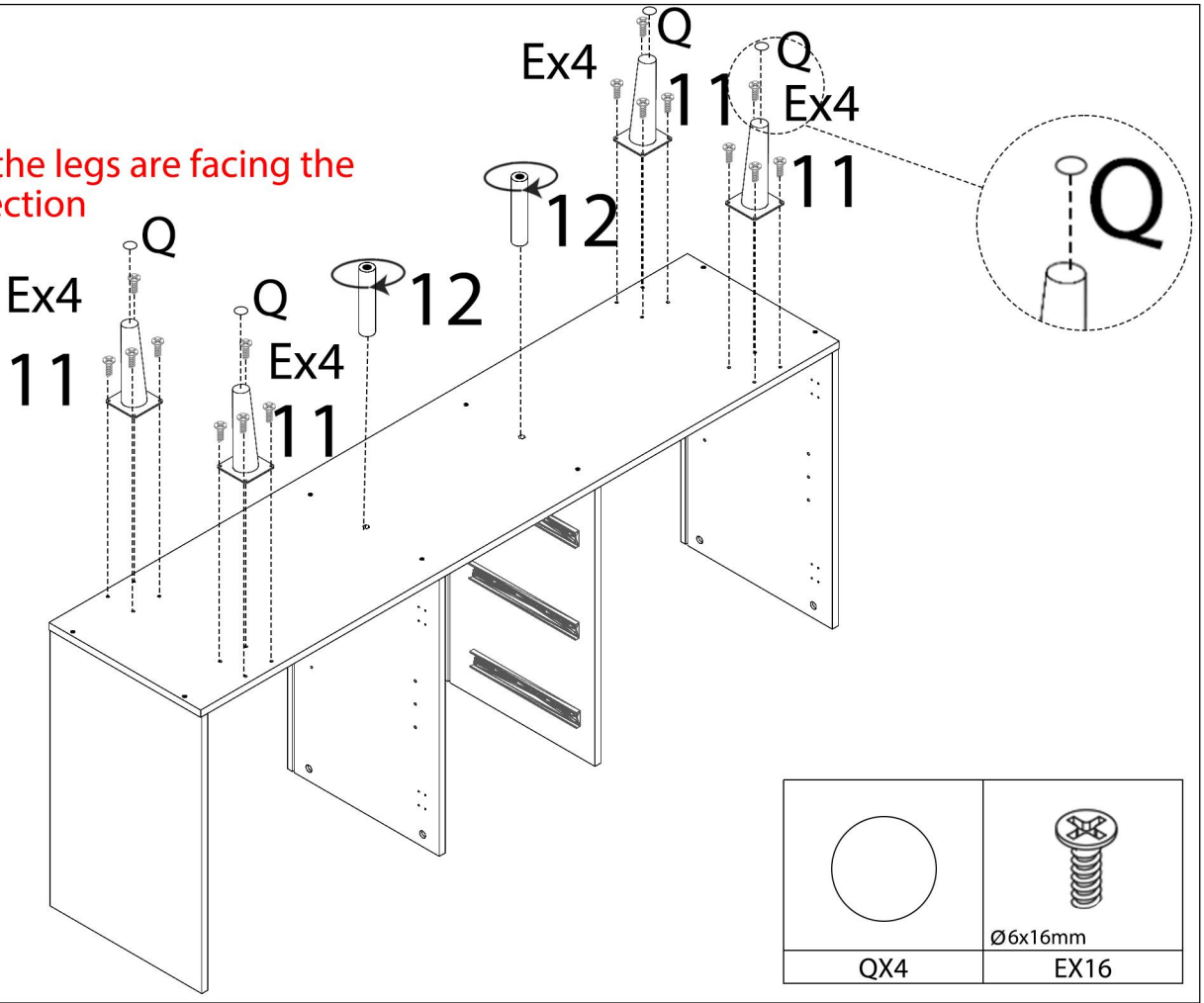

STEP 8

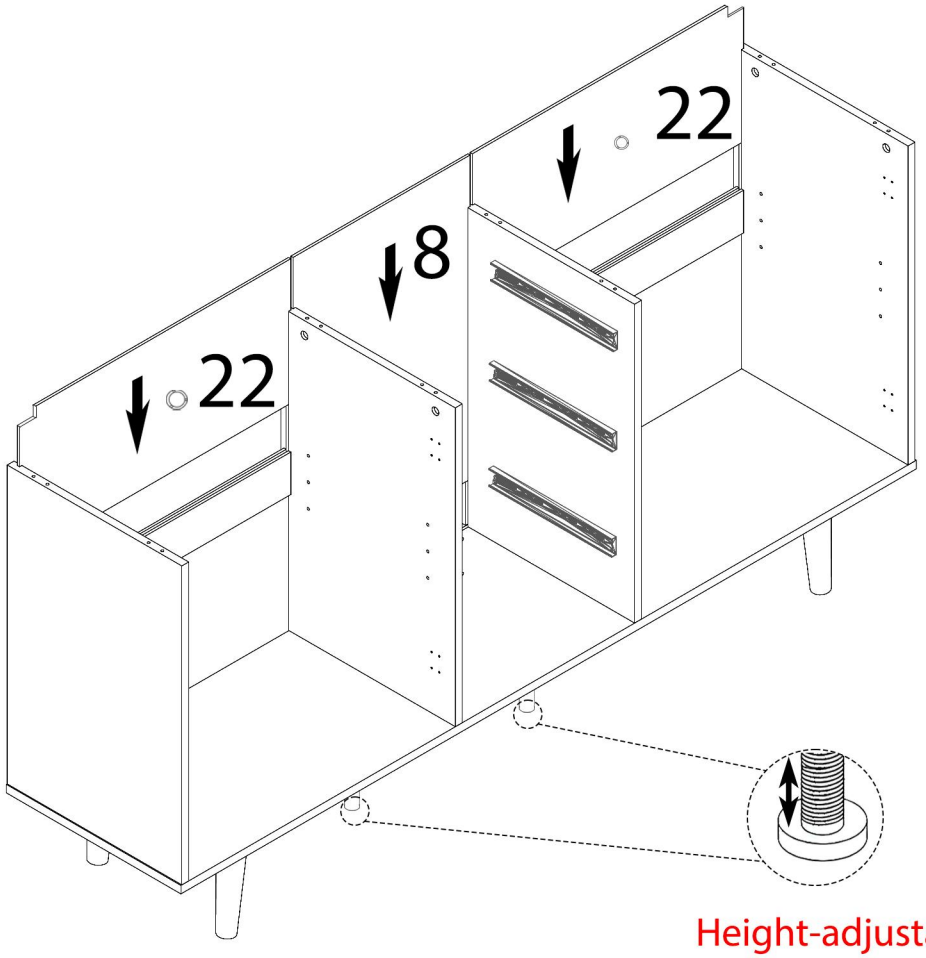

Height-adjustable feet

STEP 9

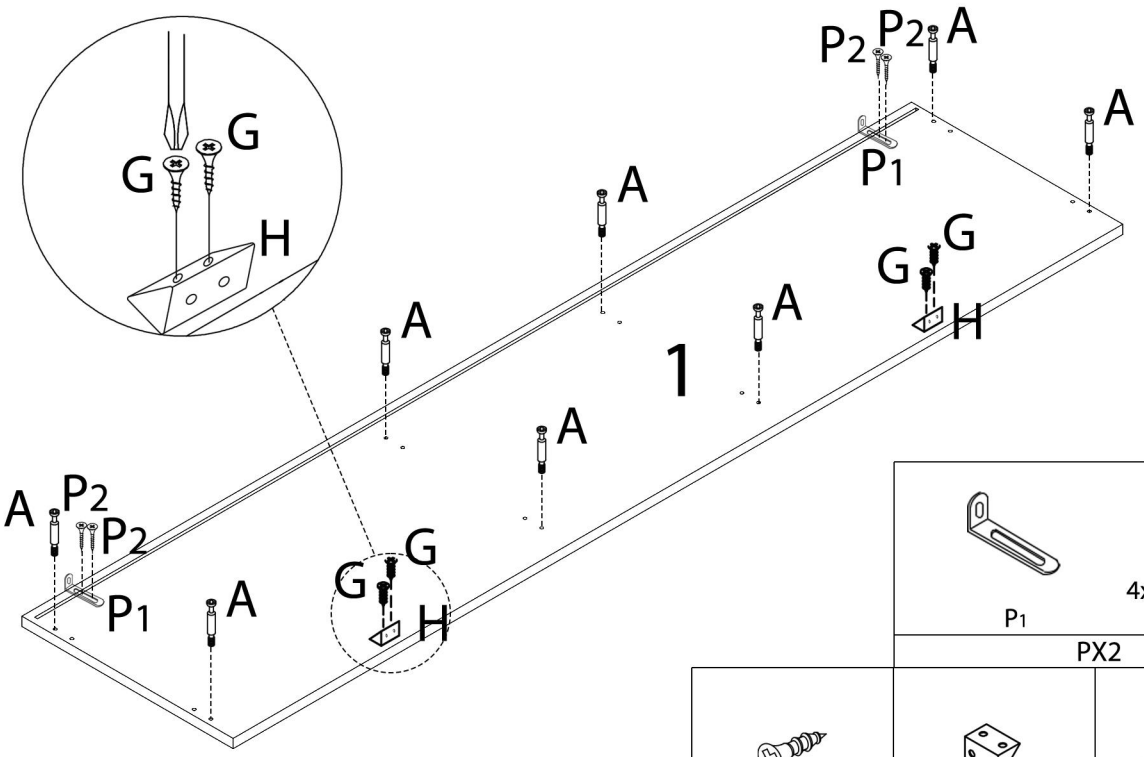

	P1	4x14mm x2 P2
	PX2	
Ø3.5x14mm		Ø6x35mm
GX4	HX2	AX8

STEP 10

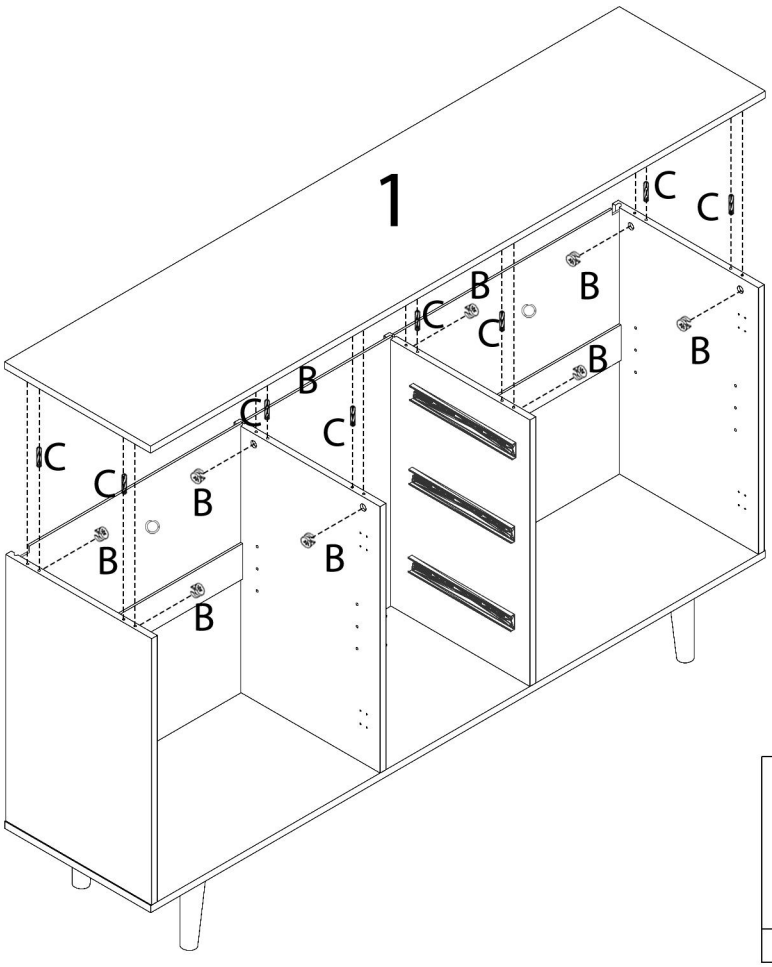

BX8	CX8

STEP 11

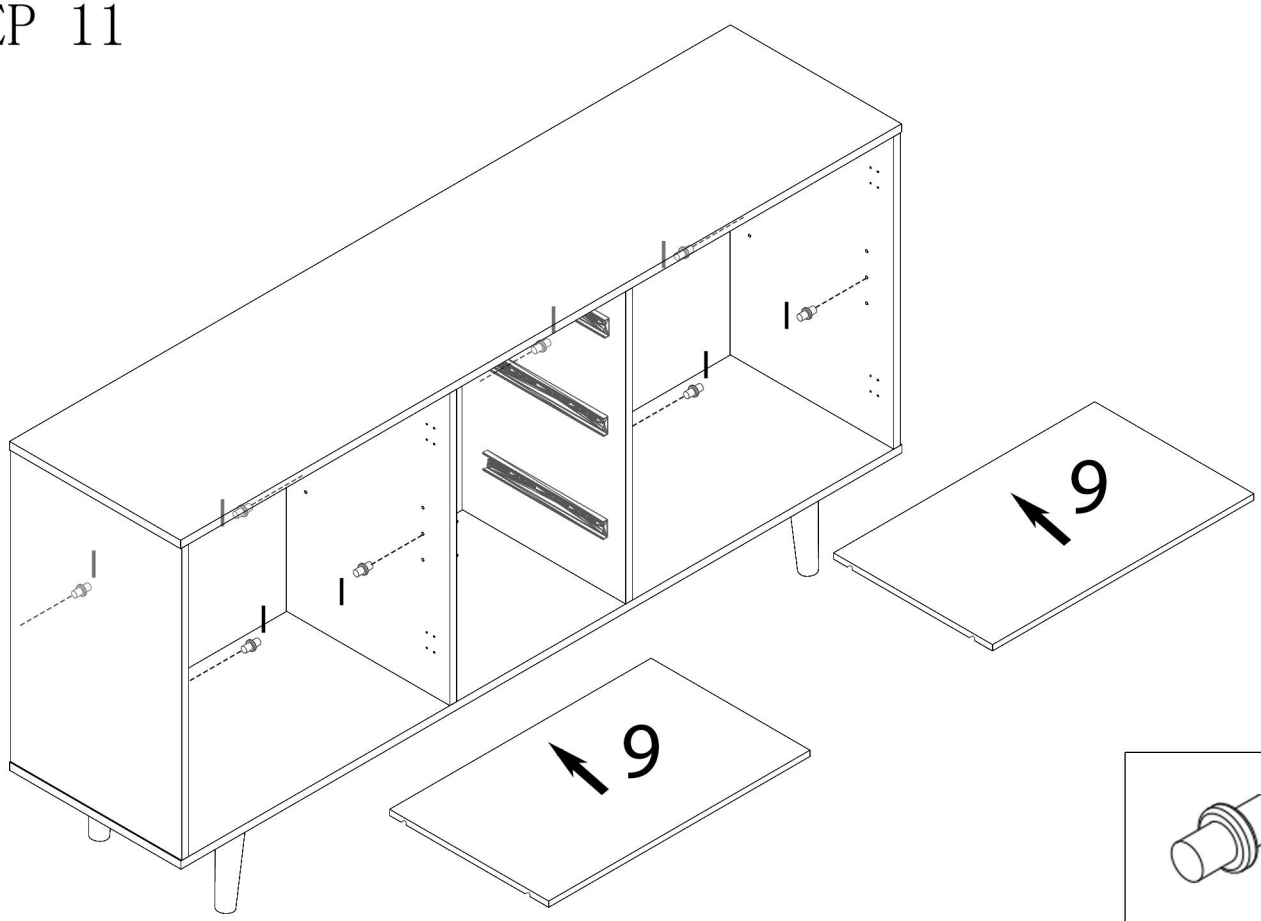

IX8

STEP 12

X2

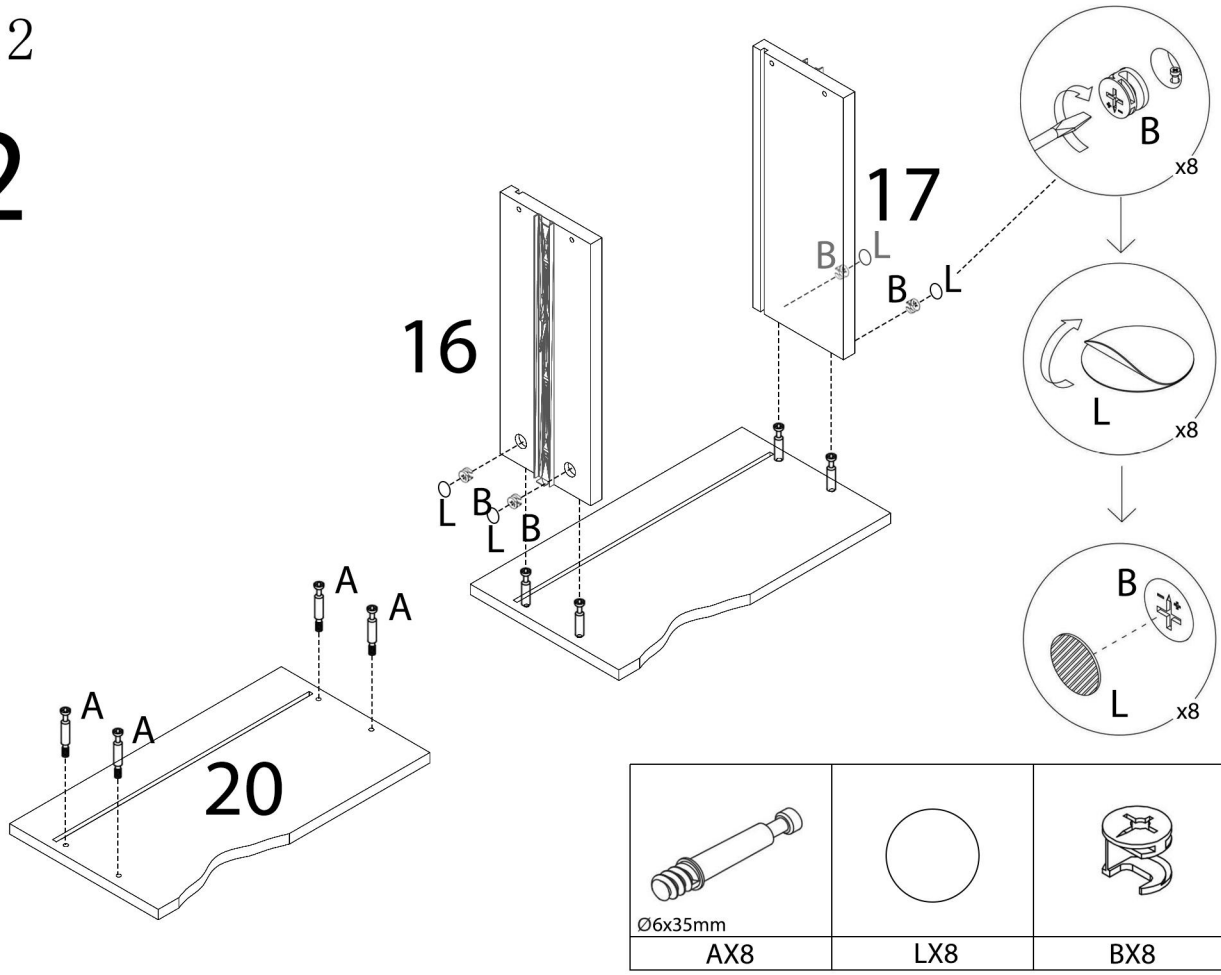

Ø6x35mm

AX8

LX8

BX8

STEP 13

X2

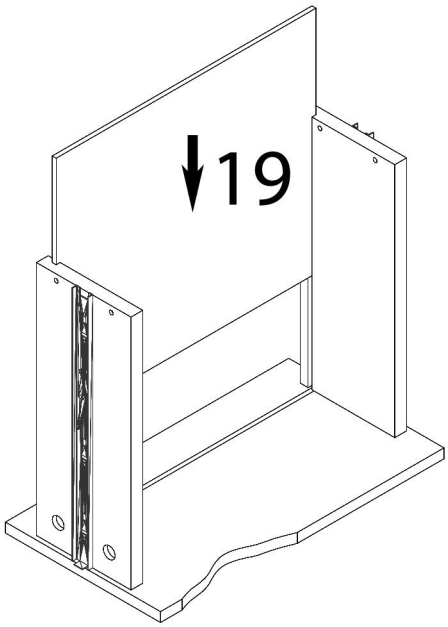

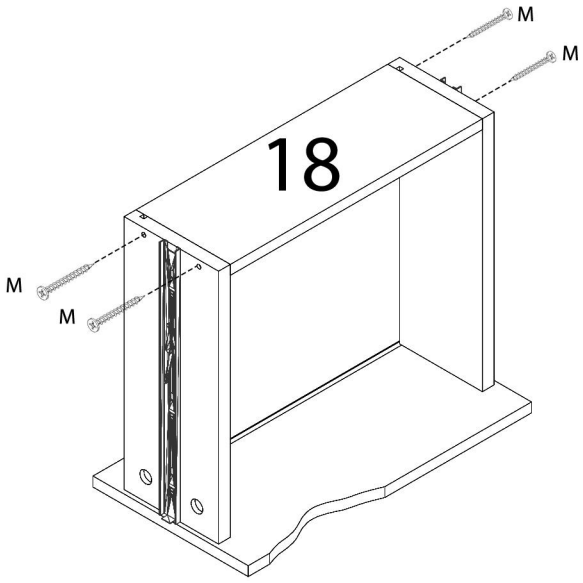

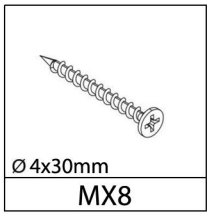

STEP 14

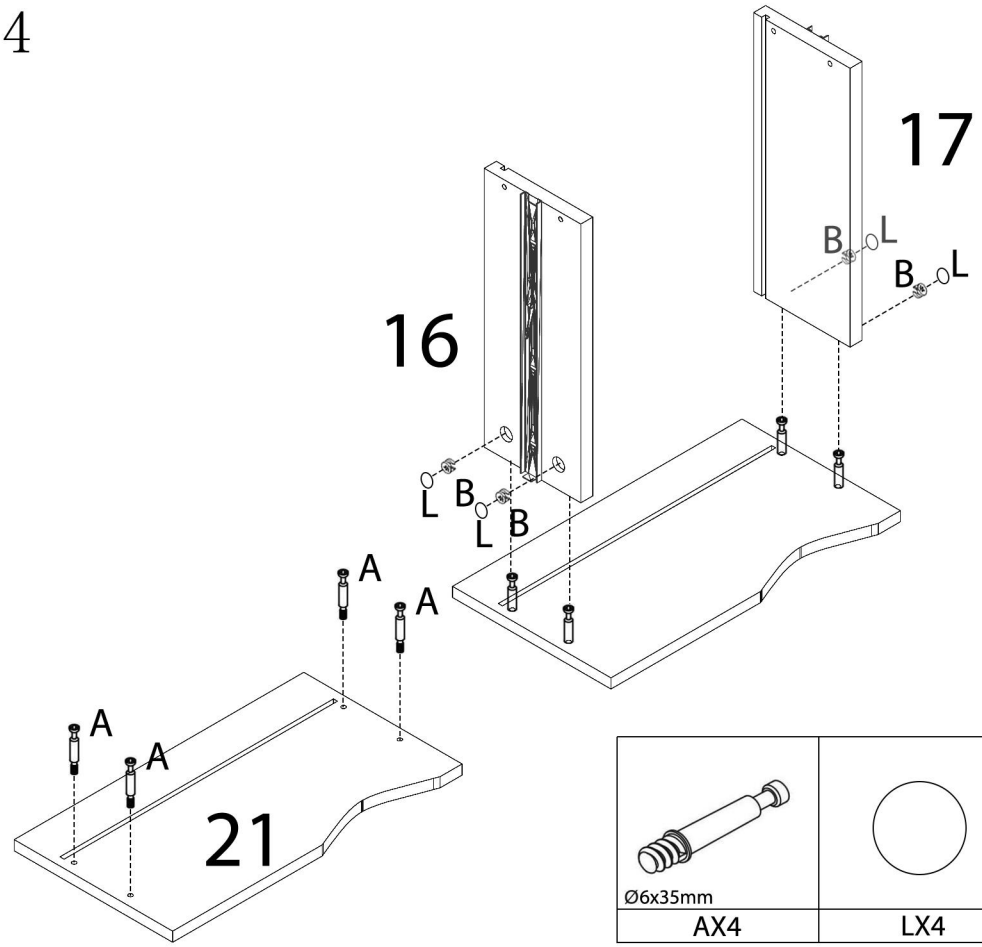

STEP 15

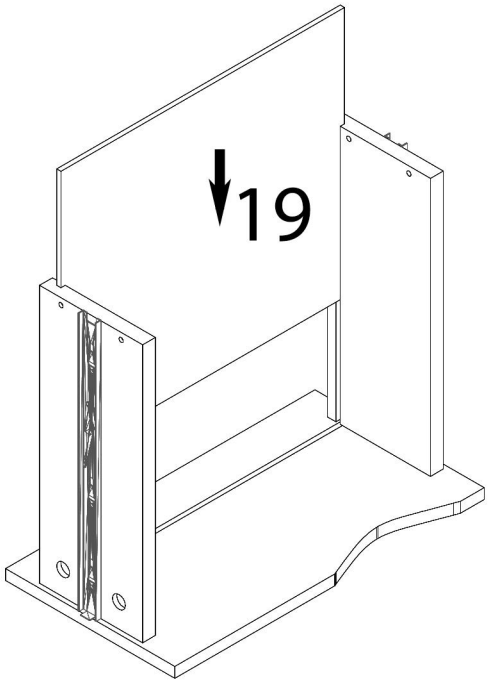

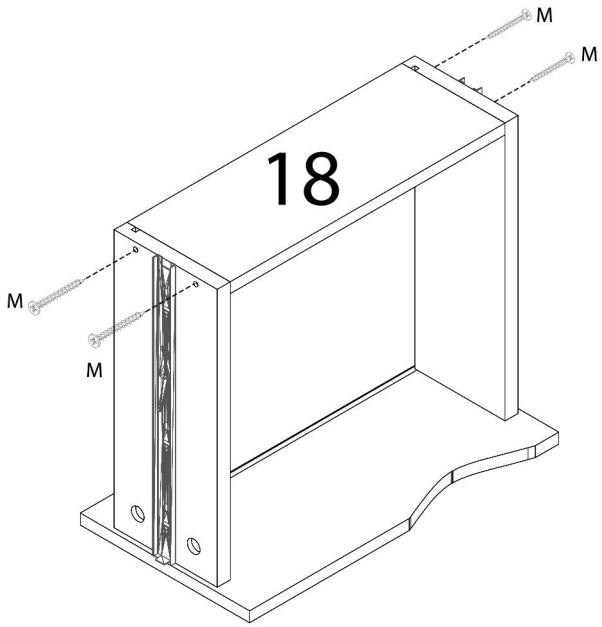



STEP 16

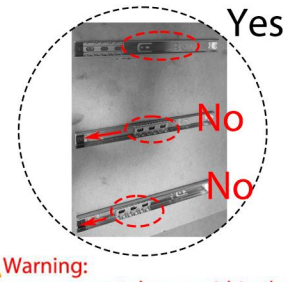

⚠Warning:
The component shown within the dashed line should be repositioned to the top end

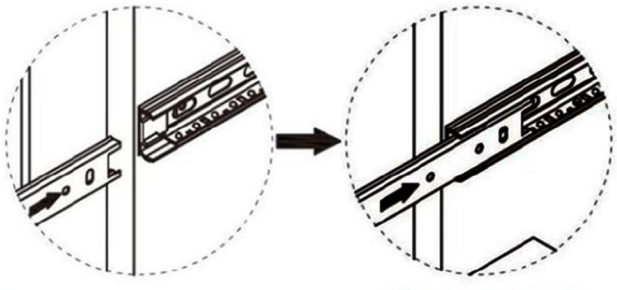

Align the left and rightside rails with the slots

Slide forward slowly

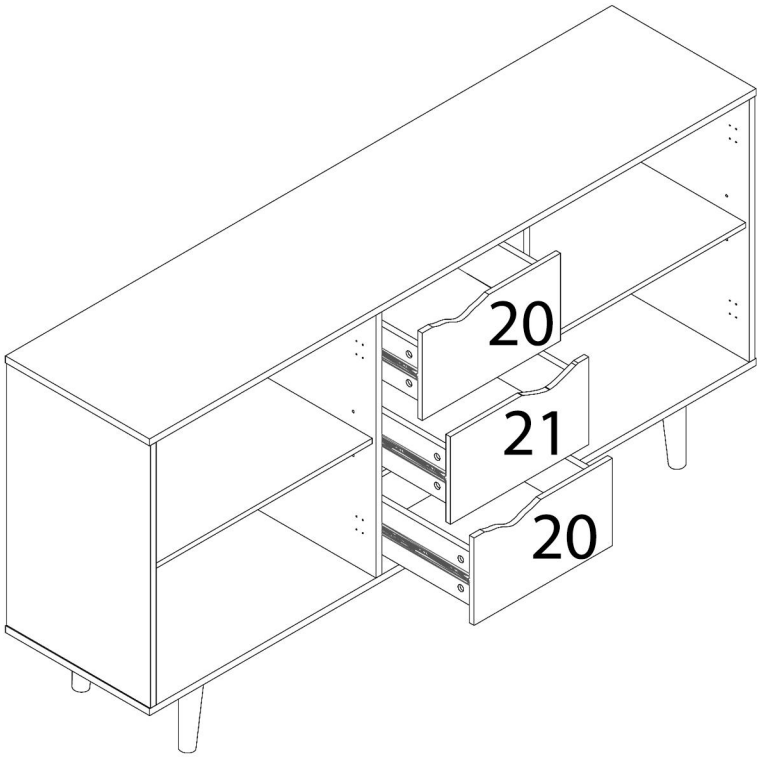

STEP 17

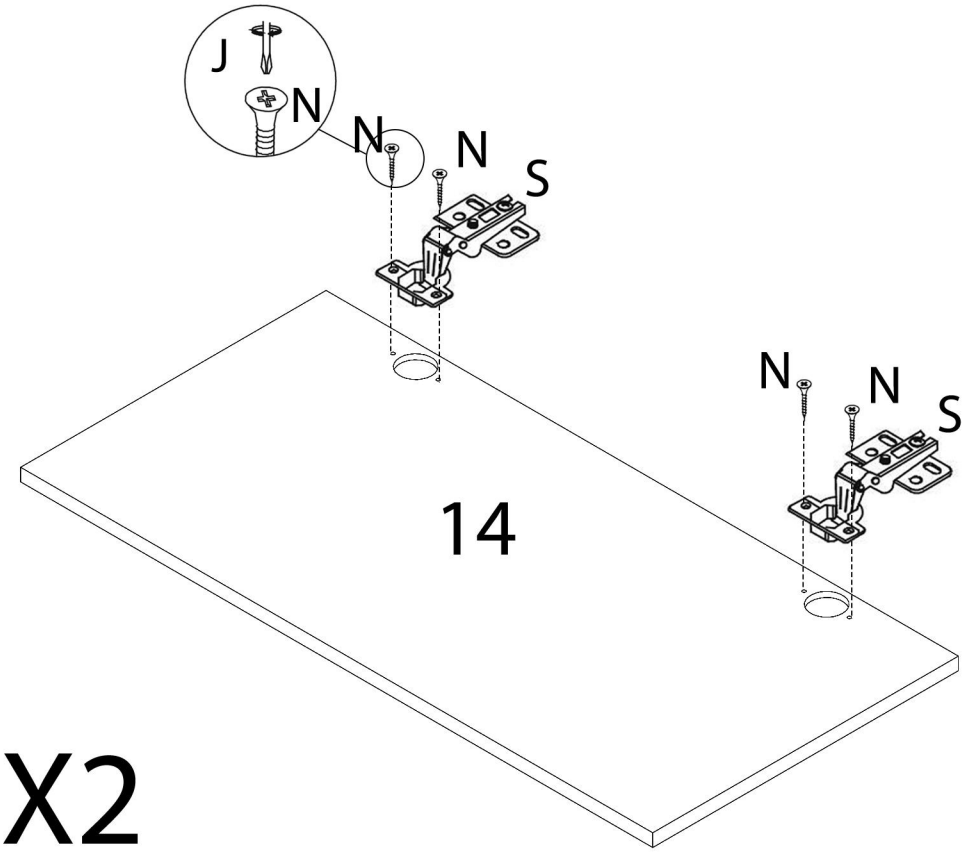

X2

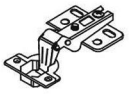	 Ø 4x14mm
SX4	NX8

STEP 18

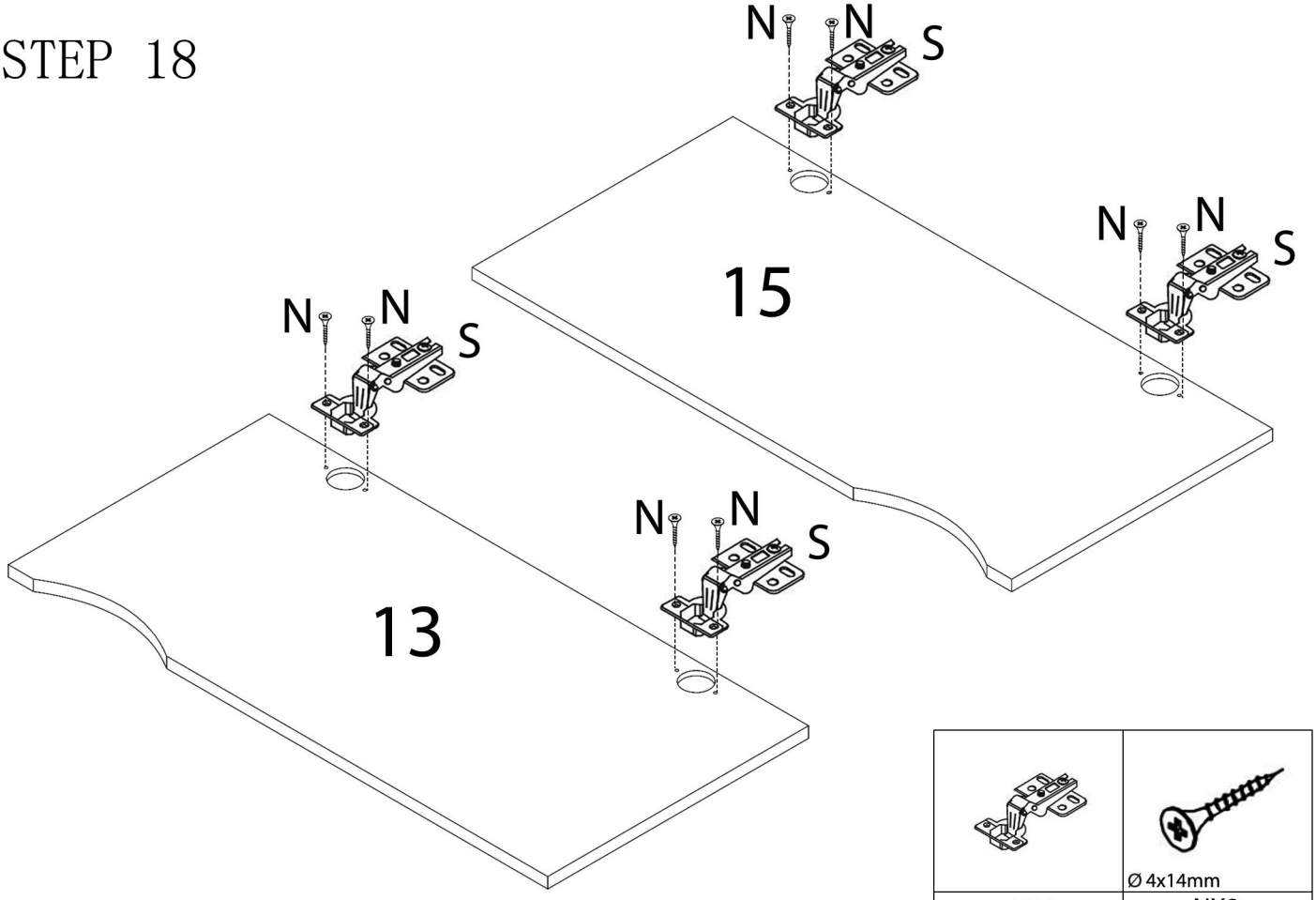

	Ø 4x14mm
SX4	NX8

STEP 19

Tip: Corresponding hinge letters to wooden board letters

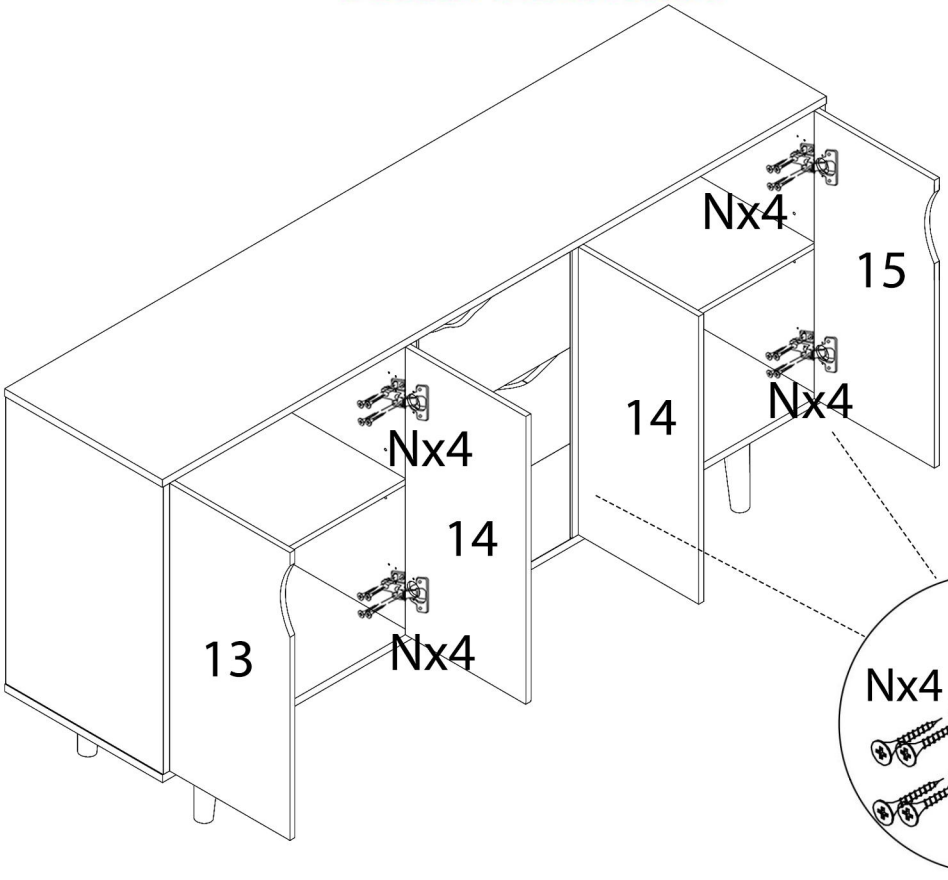

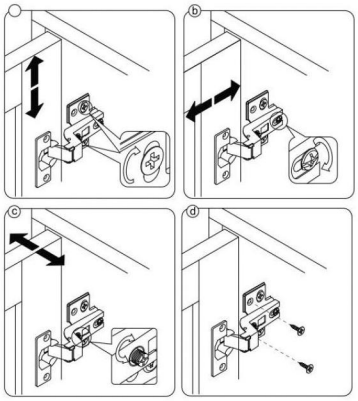

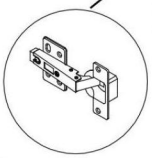

NOTE: If the doors are uneven or there is a gap in the middle, loosen or tighten the screw on the door hinge until they are sitting flush.

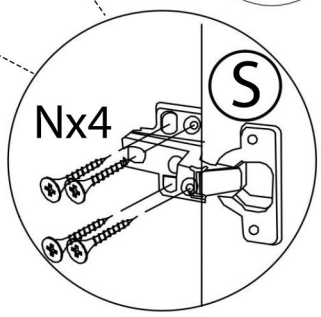



Ø4x14mm

NX32

STEP 20

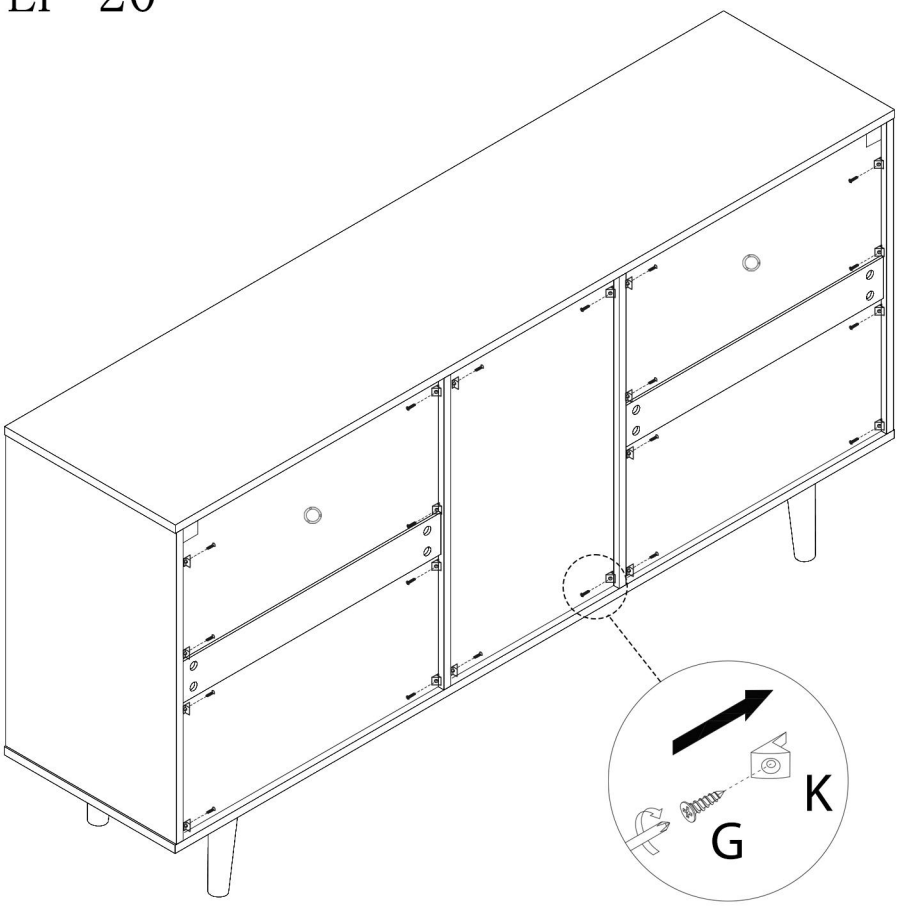



Ø3.5x14mm

GX20



KX20

STEP 21

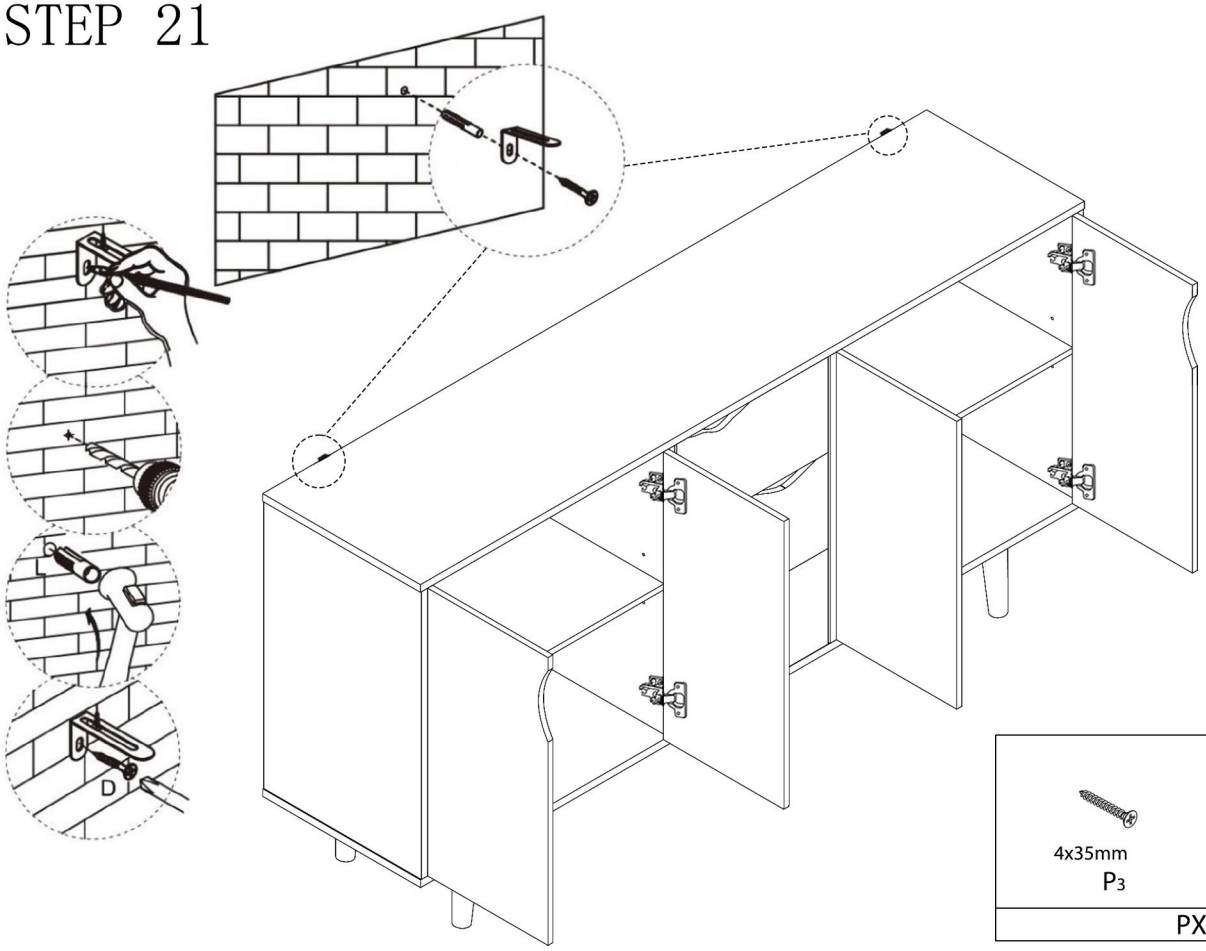

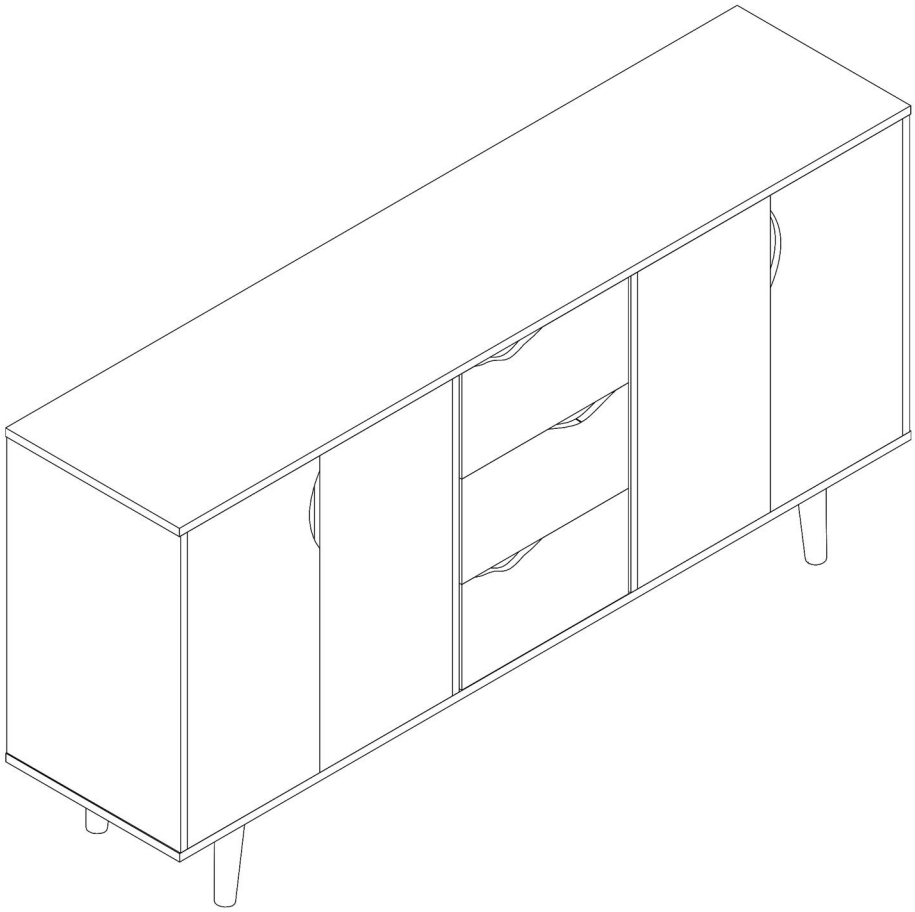

Assembly Steps(EN) / Montageschritte(DE)

HOW TO ADJUST THE HINGES TO ALIGN THE DOORS IF NEEDED.

STEP 1

Open the door.

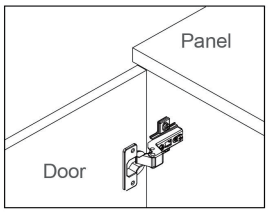

STEP 2

Adjust the door panelsupward or downward

1.

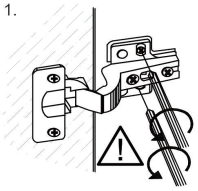

Unscrew 2 screws in round holes loosen 2 screws in oval holes a bit.

2.

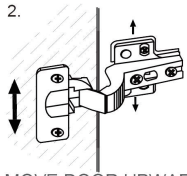

MOVE DOOR UPWARD OR DOWNWARD

3.

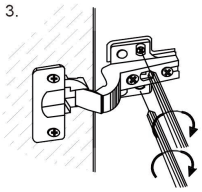

Tighten 2 screws in oval holes. Screw in 2 screws in round holes

STEP 3

Adjust the flush between door panel and side panel

1.

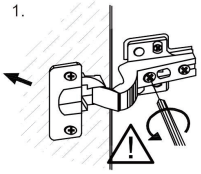

MOVE DOOR OUTWARD by turning this screw counter-clockwise

2.

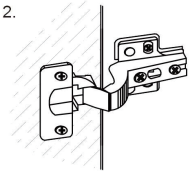

KEEP DOOR IN RIGHT POSITION

3.

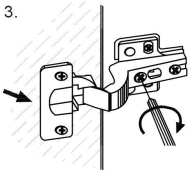

MOVE DOOR OUTWARD by turning this screw clockwise

STEP 4

Adjust the Gap beteen door panel and side panel

1.

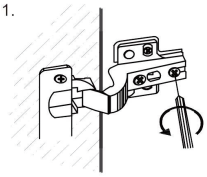

Loosen this screw a bit.

2.

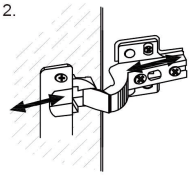

MOVE DOOR BACK OR FORTH

3.

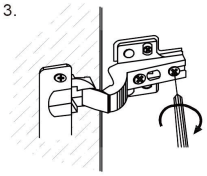

Re-tighten this screw.