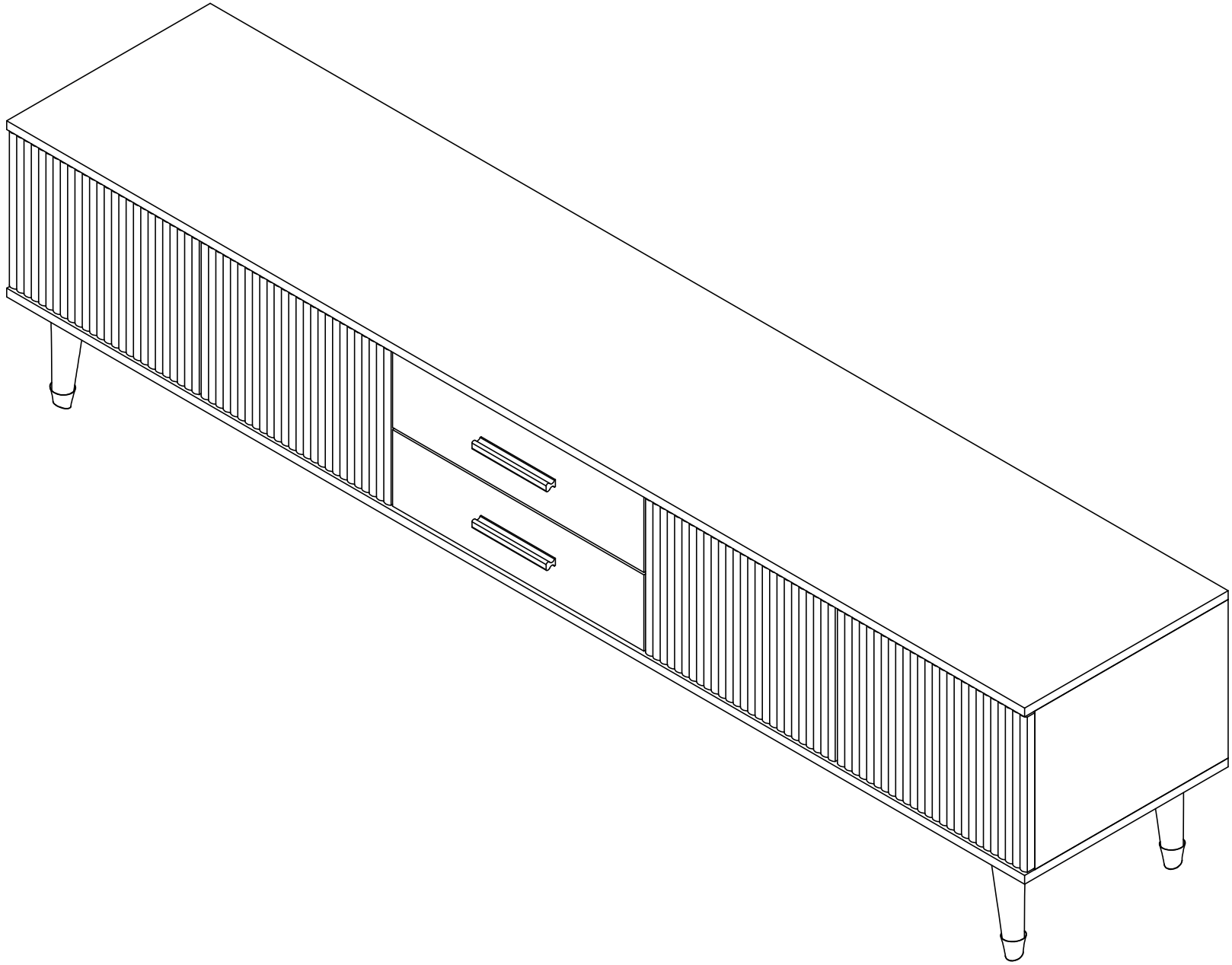

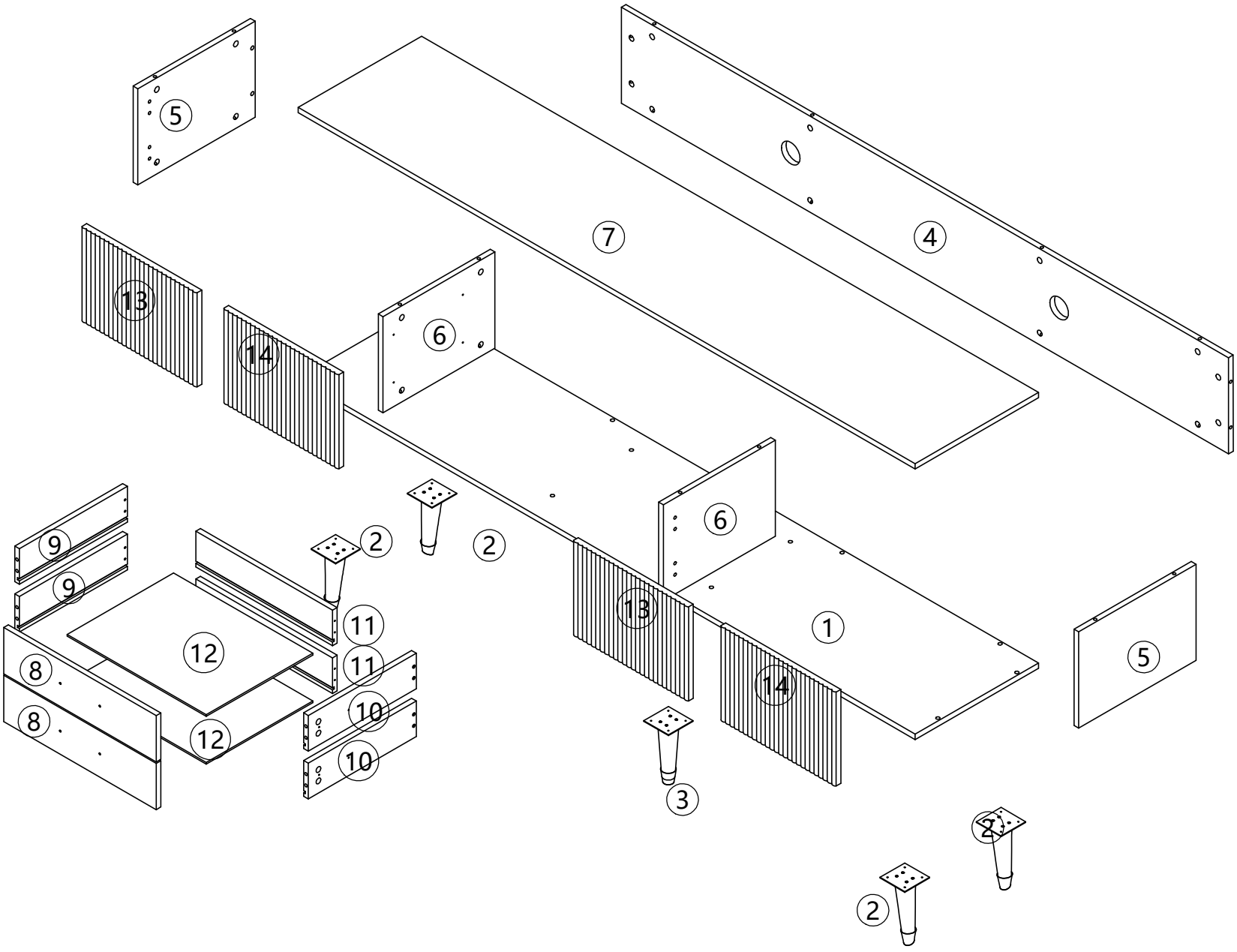
5
7
4
13
14
6
6
9
9
2
2
11
12
11
8
8
12
10
10
13
1
14
5
3
2
2

① 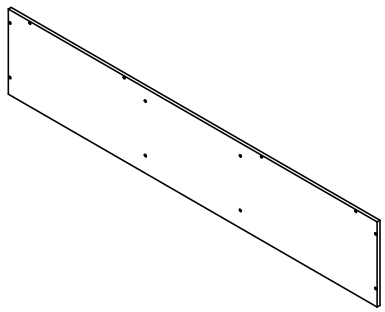 1PCS	② 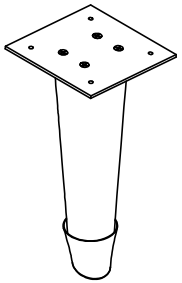 4PCS	③ 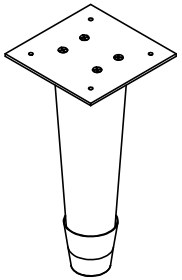 1PCS	④ 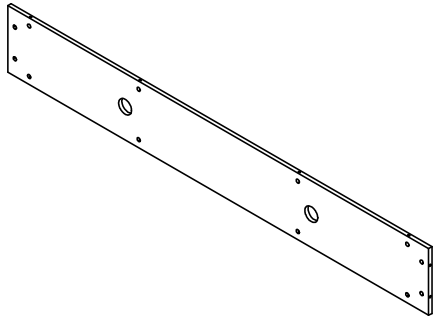 1PCS	⑤ 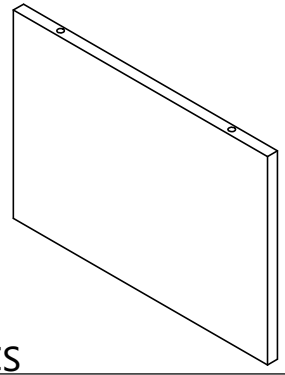 2PCS
⑥ 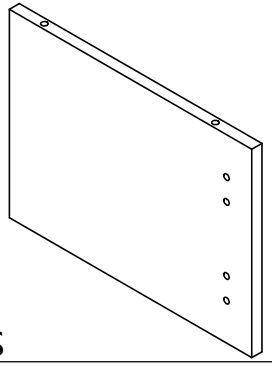 2PCS	⑦ 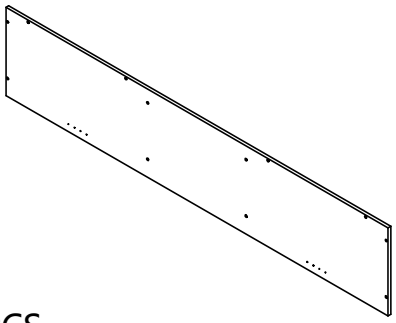 1PCS	⑧ 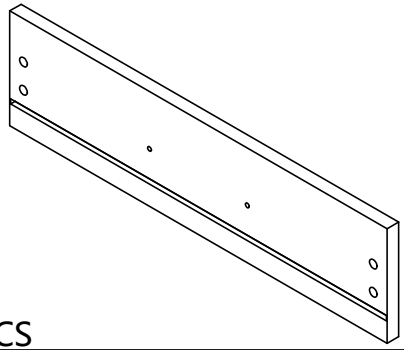 2PCS	⑨ 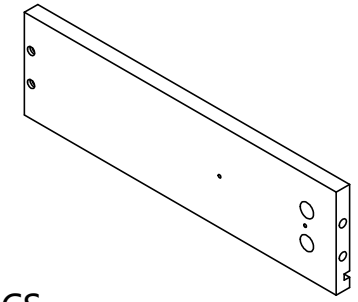 2PCS	⑩ 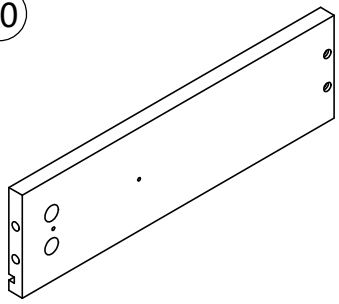 2PCS
⑪ 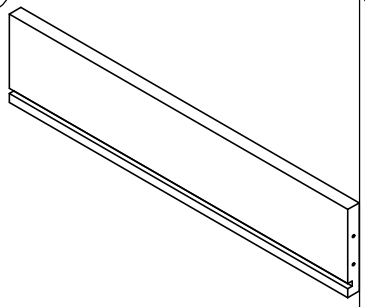 2PCS	⑫ 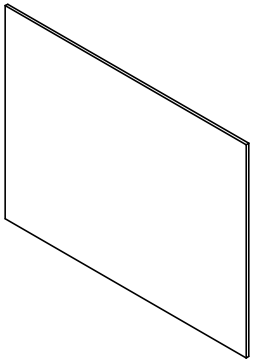 2PCS	⑬ 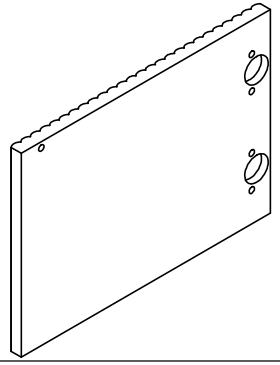 2PCS	⑭ 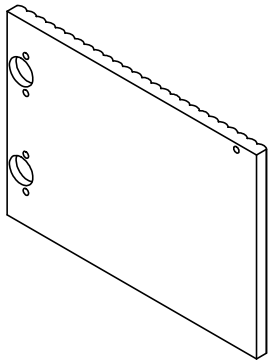 2PCS	

Ⓐ

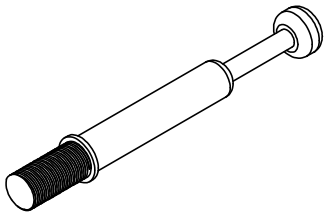

6*40=36PCS(+2PCS)

Ⓑ

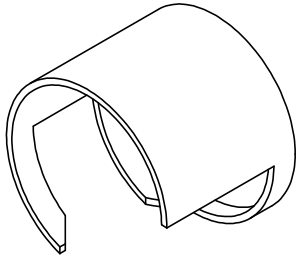

15*10=36PCS(+2PCS)

Ⓒ

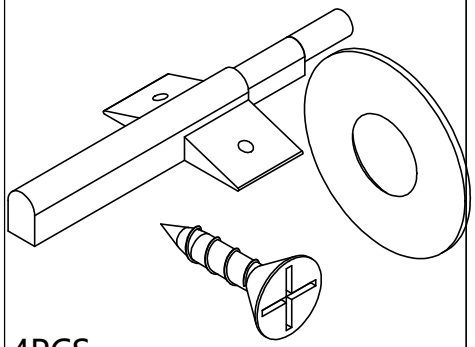

4PCS

Ⓓ

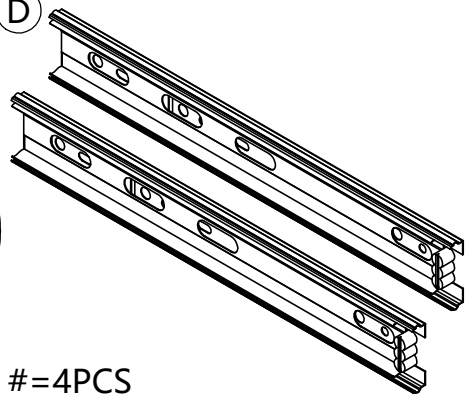

#=4PCS

Ⓔ

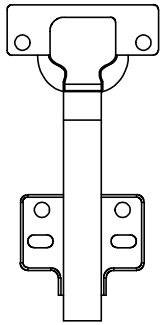

8PCS

Ⓕ

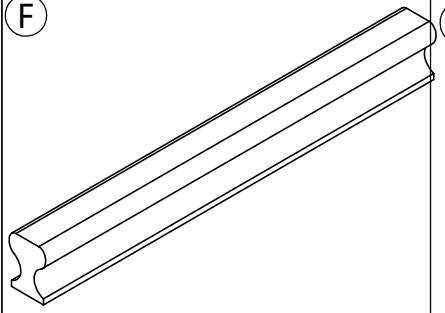

146*18*12=2PCS

Ⓖ

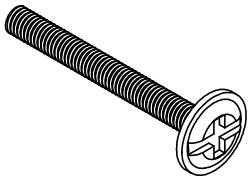

M4*18=4PCS(+1PCS)

Ⓗ

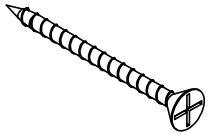

3.5*30=8PCS(+1PCS)

Ⓘ

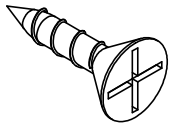

3.5*14=60PCS(+2PCS)

Ⓙ

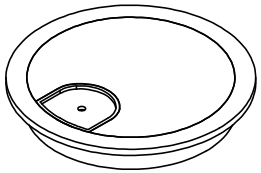

2PCS

Ⓚ

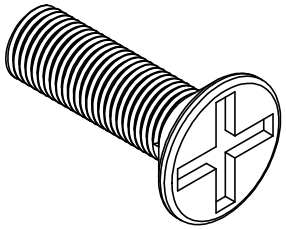

M4*10=32PCS(+2PCS)

Ⓛ

Step 3

① 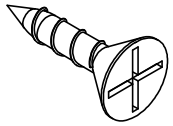 X20

Step 4

A X12

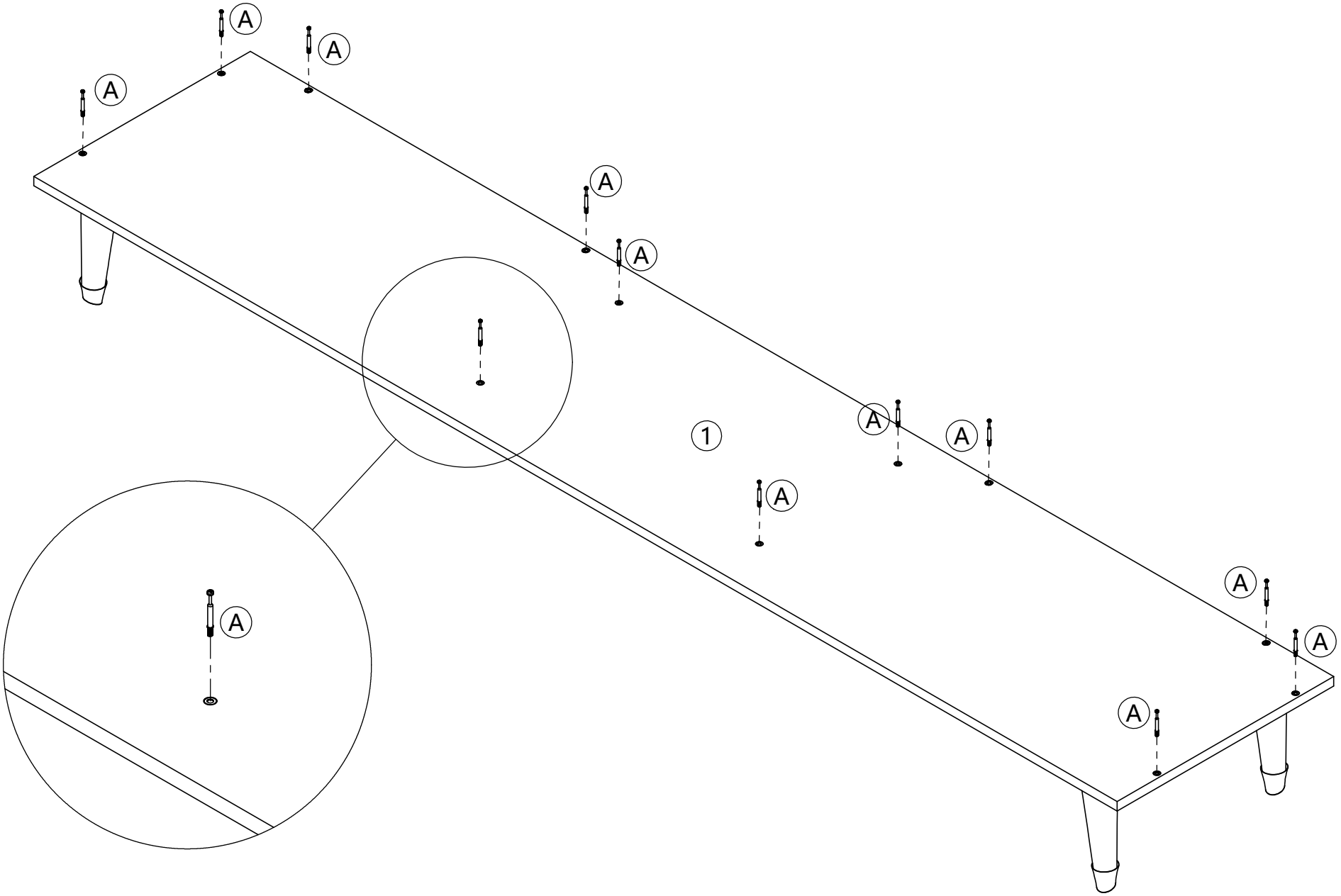

Step 5

A 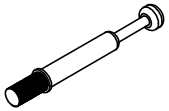 X4

B 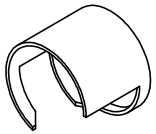 X4

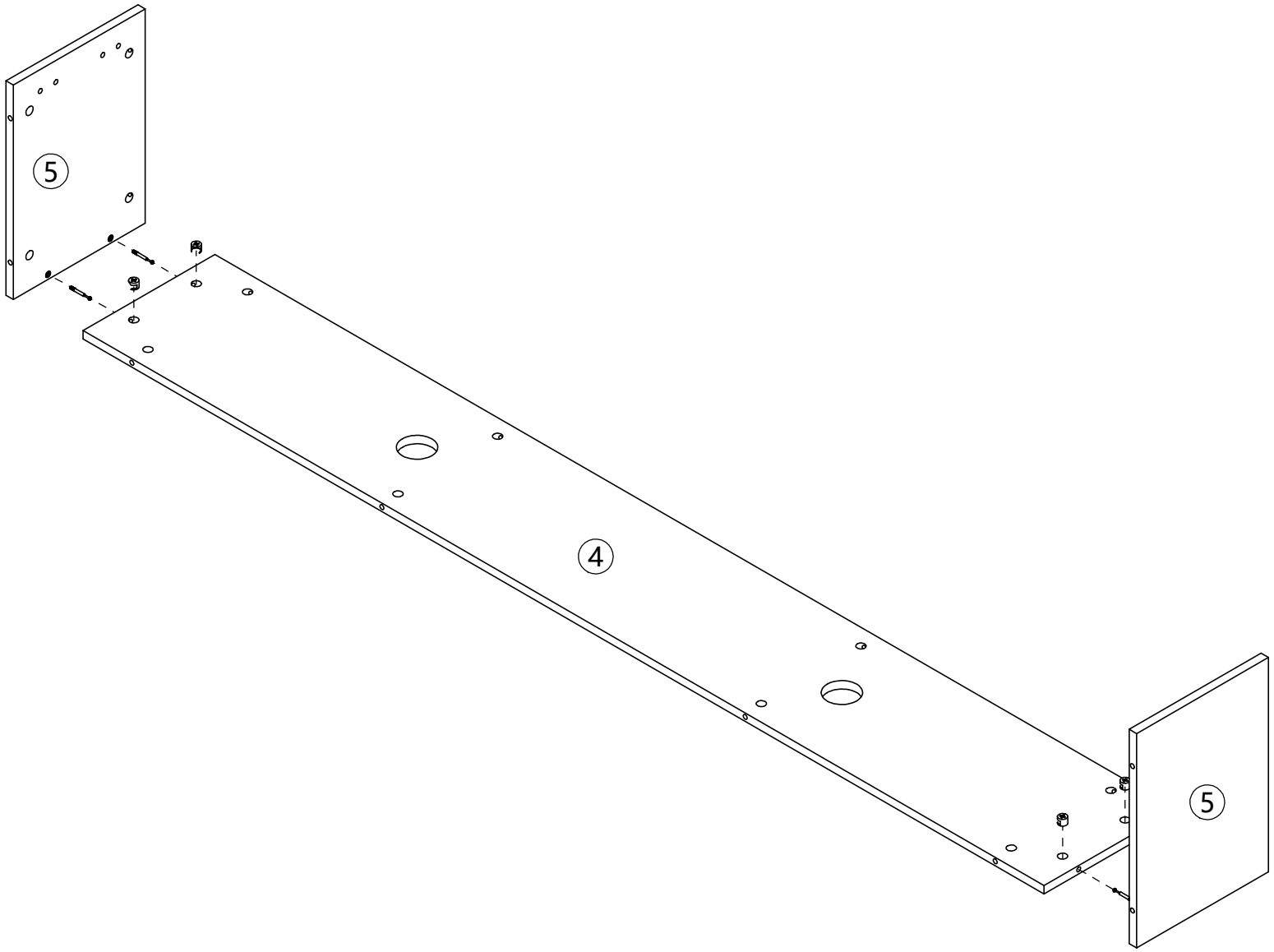

Step 6

Ⓘ 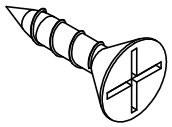 X8

Ⓓ 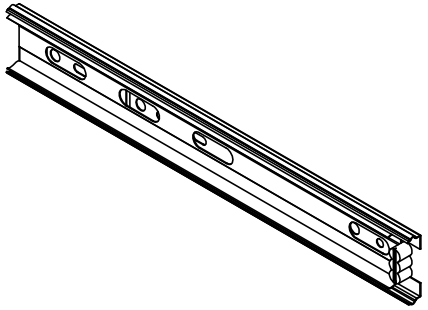 X4

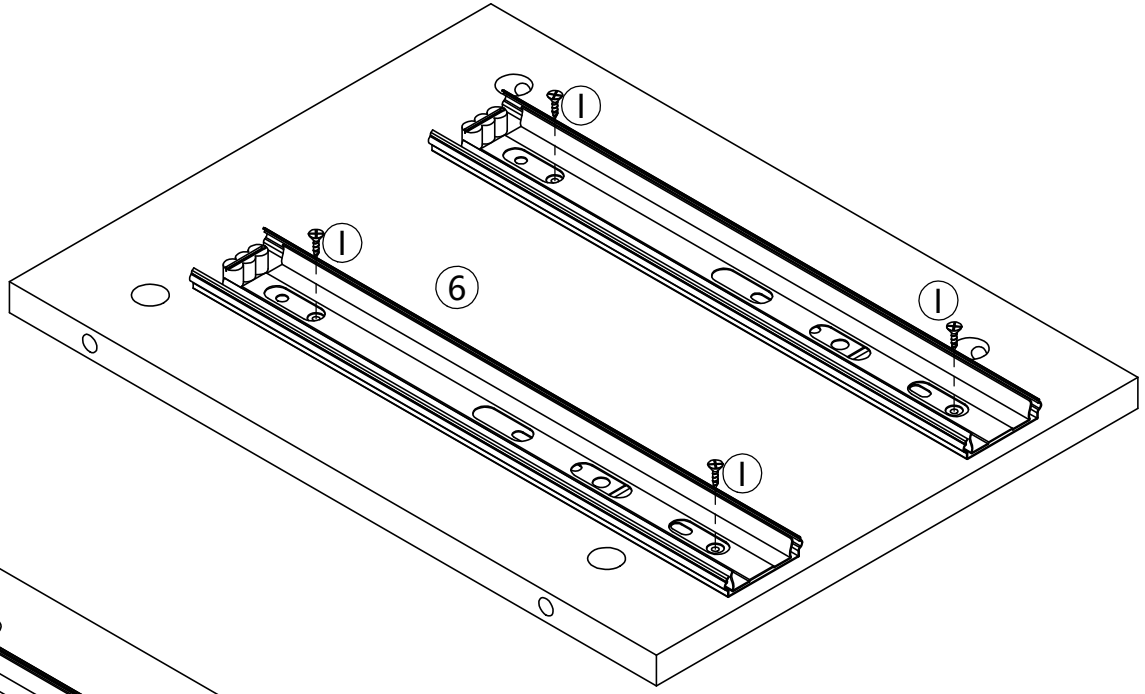

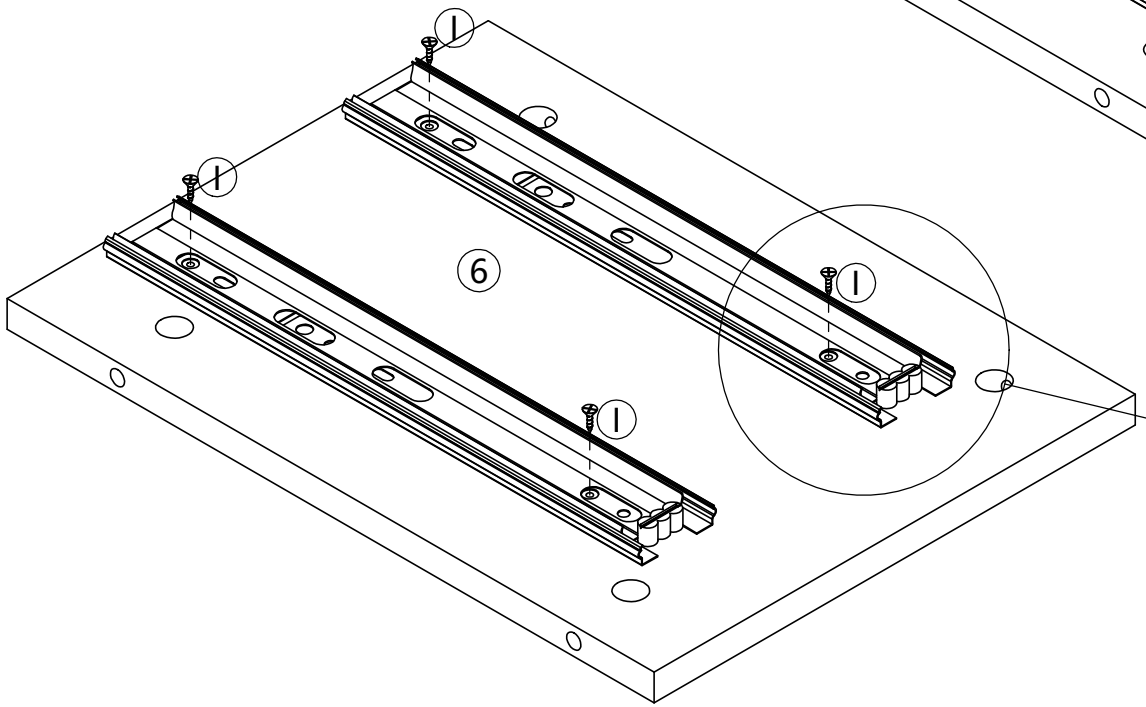

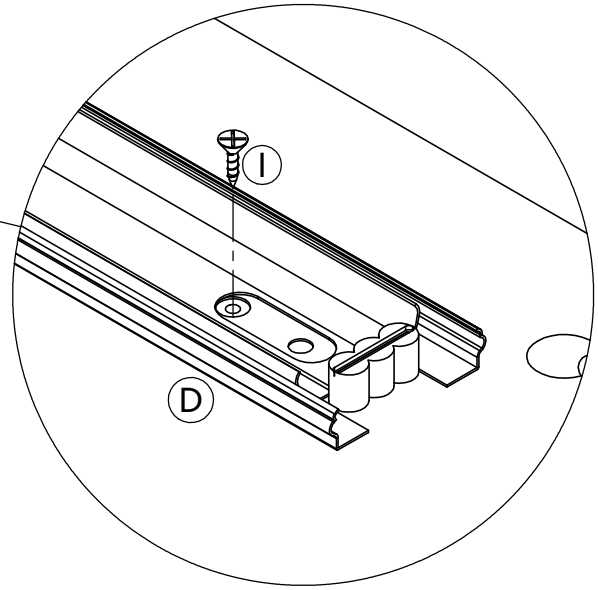

Step 7

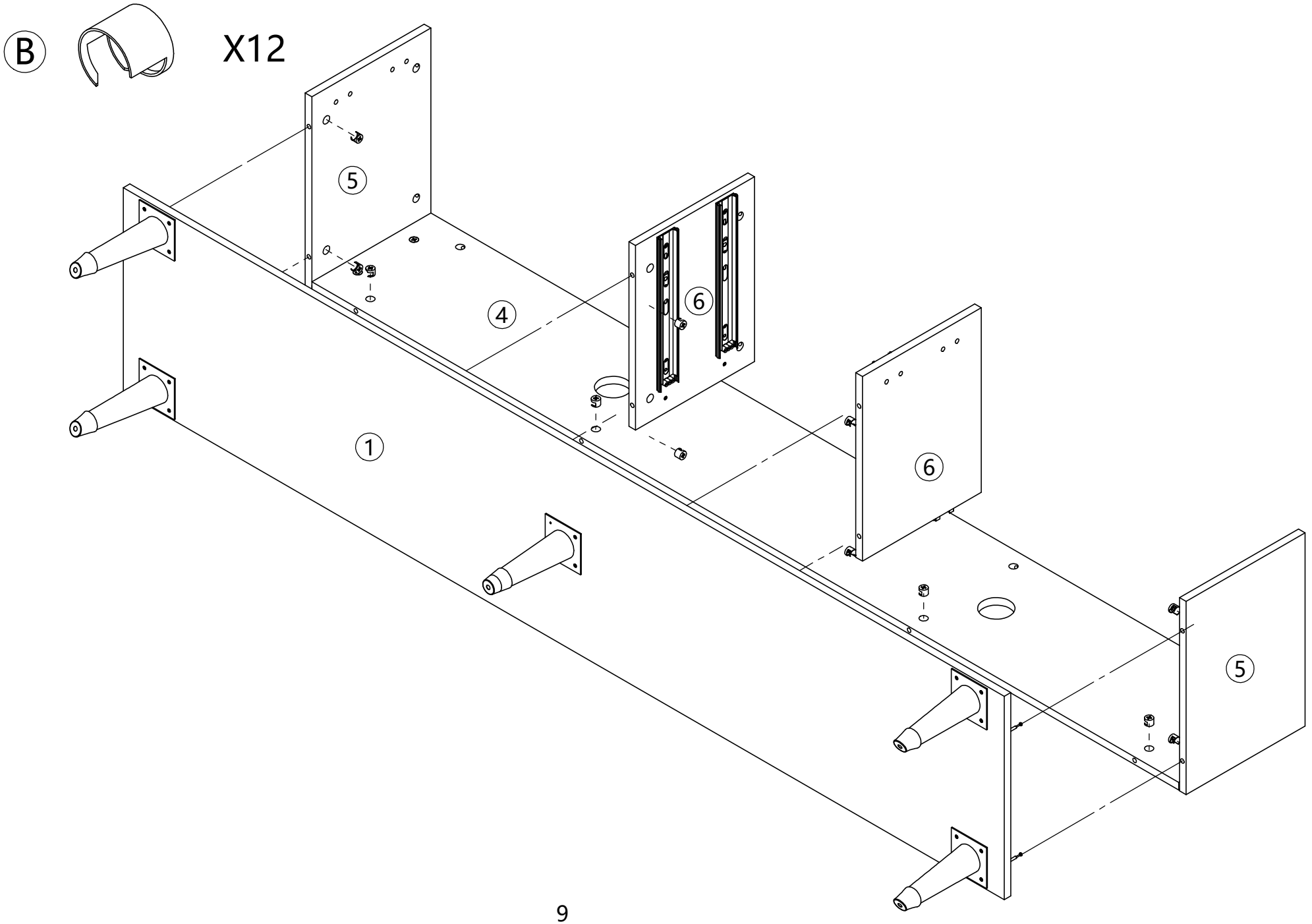

Step 9

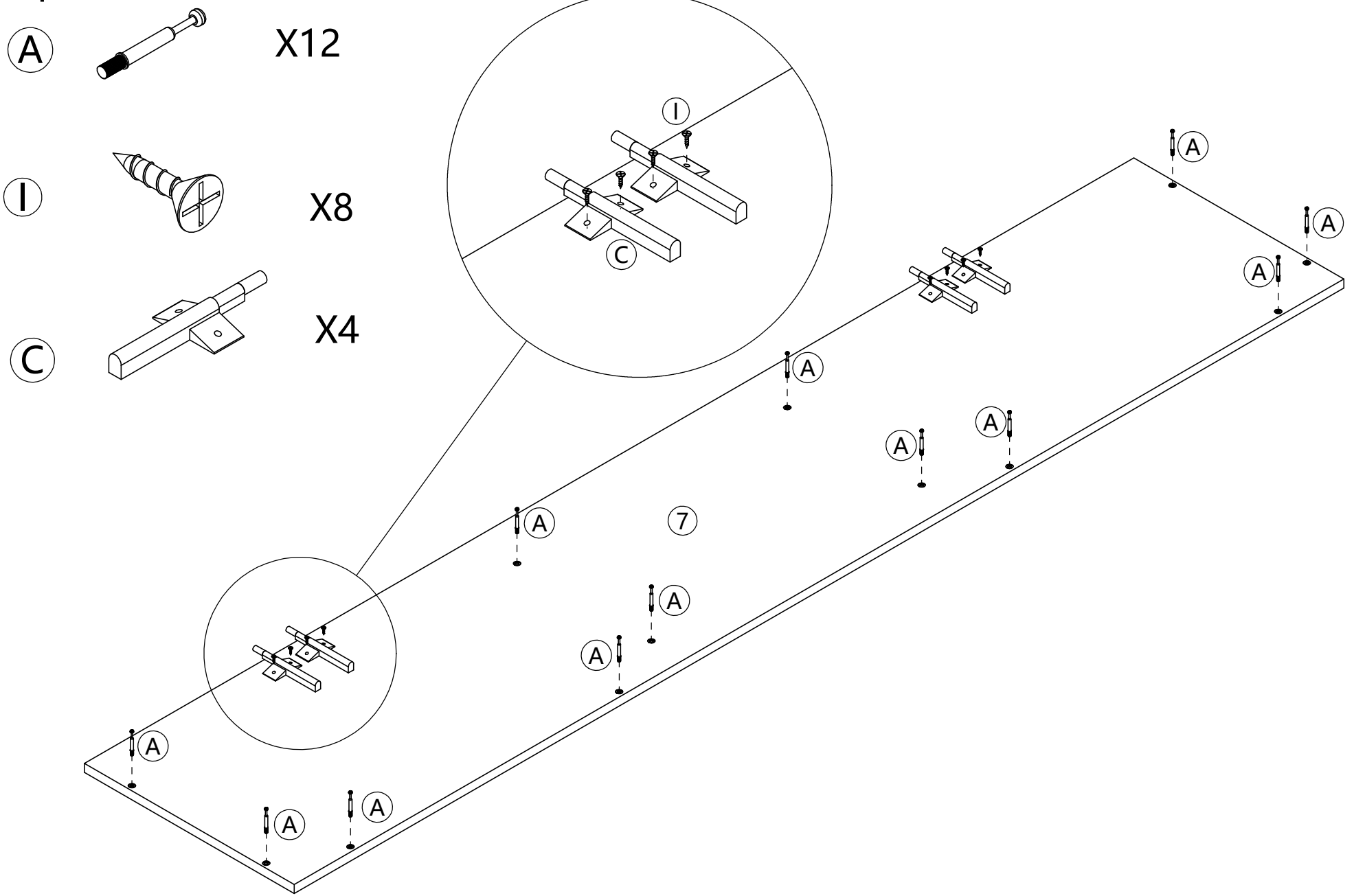

Step 10

Ⓑ 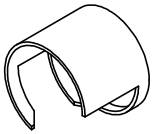 X12

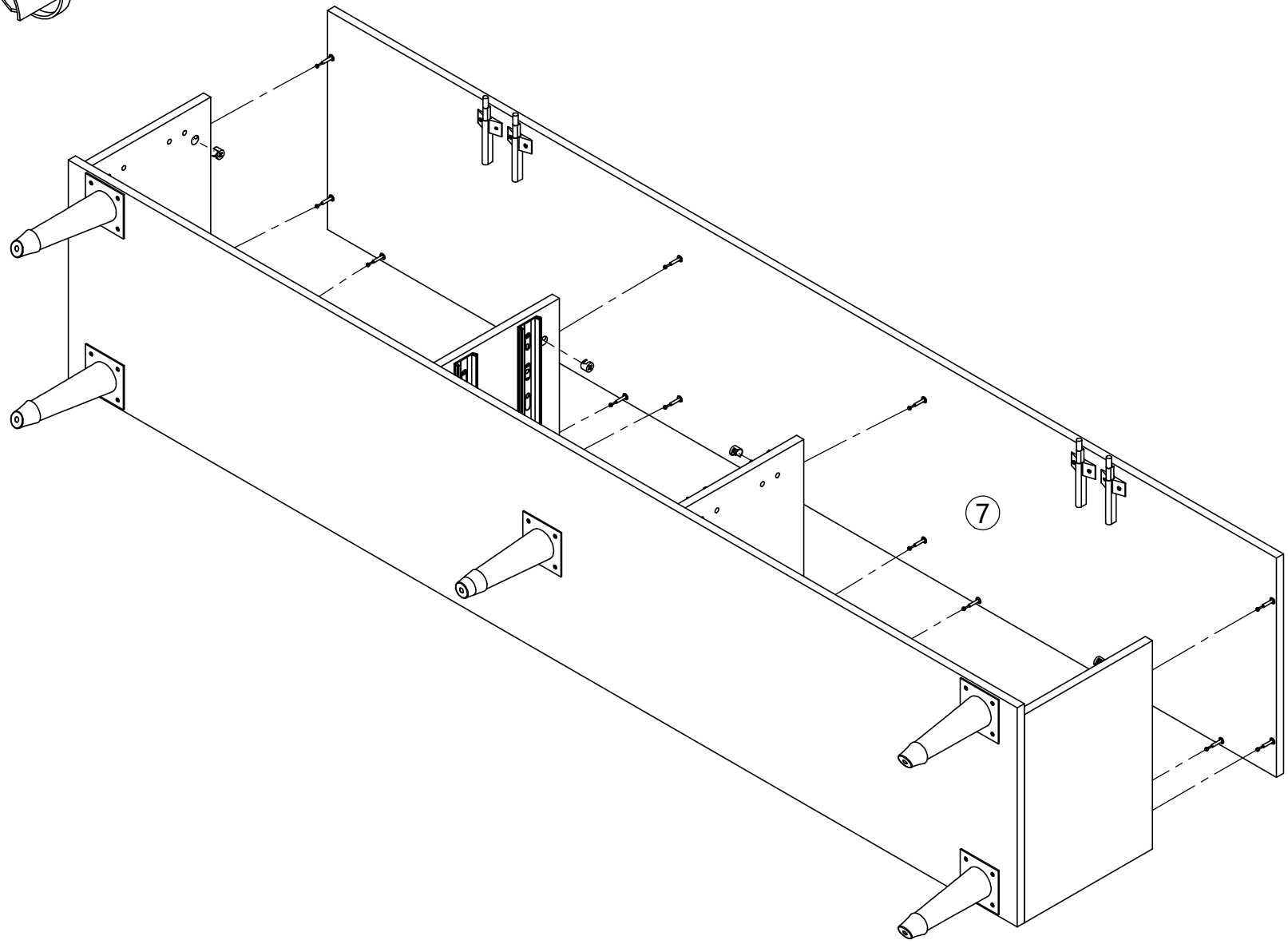

Step 11

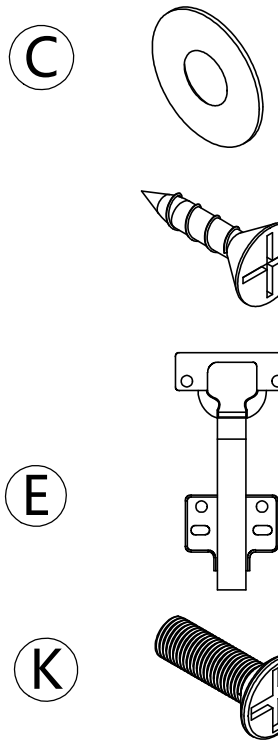

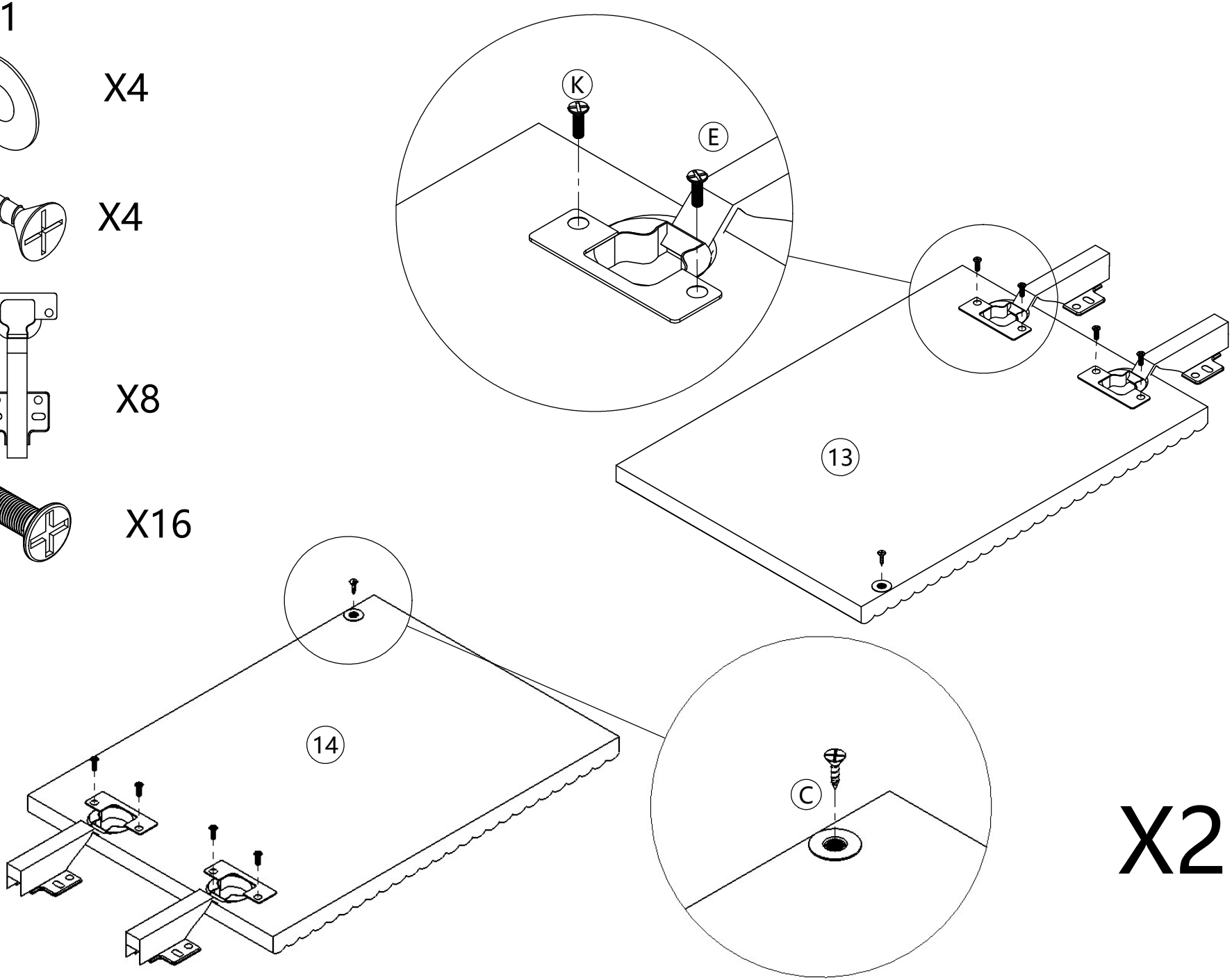

Step 12

Ⓘ 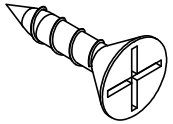 X16

Ⓚ 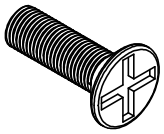 X16

Step 13

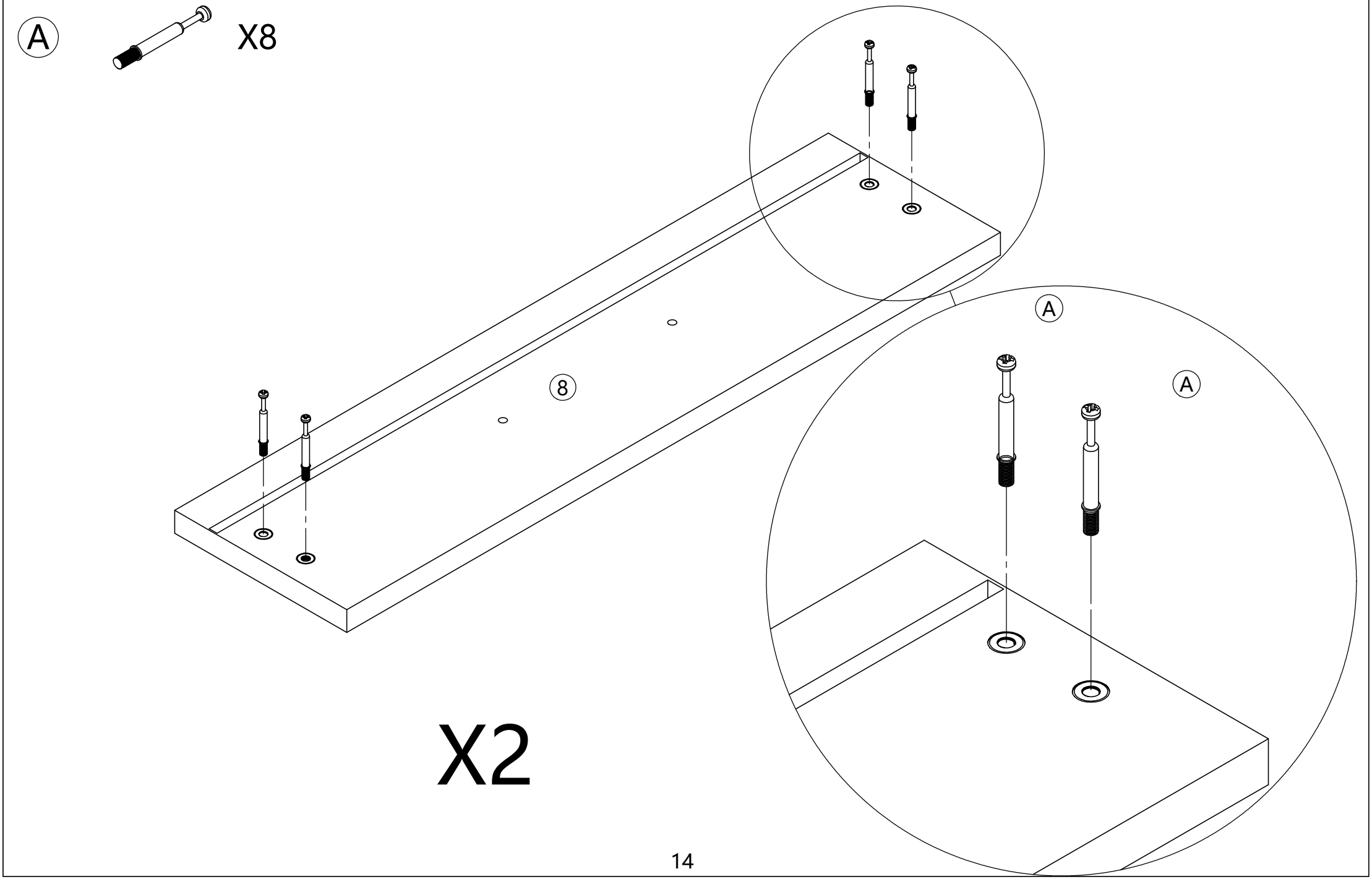

Step 14

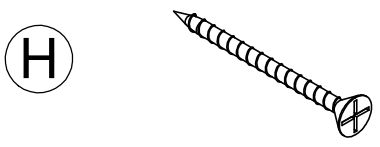

X8

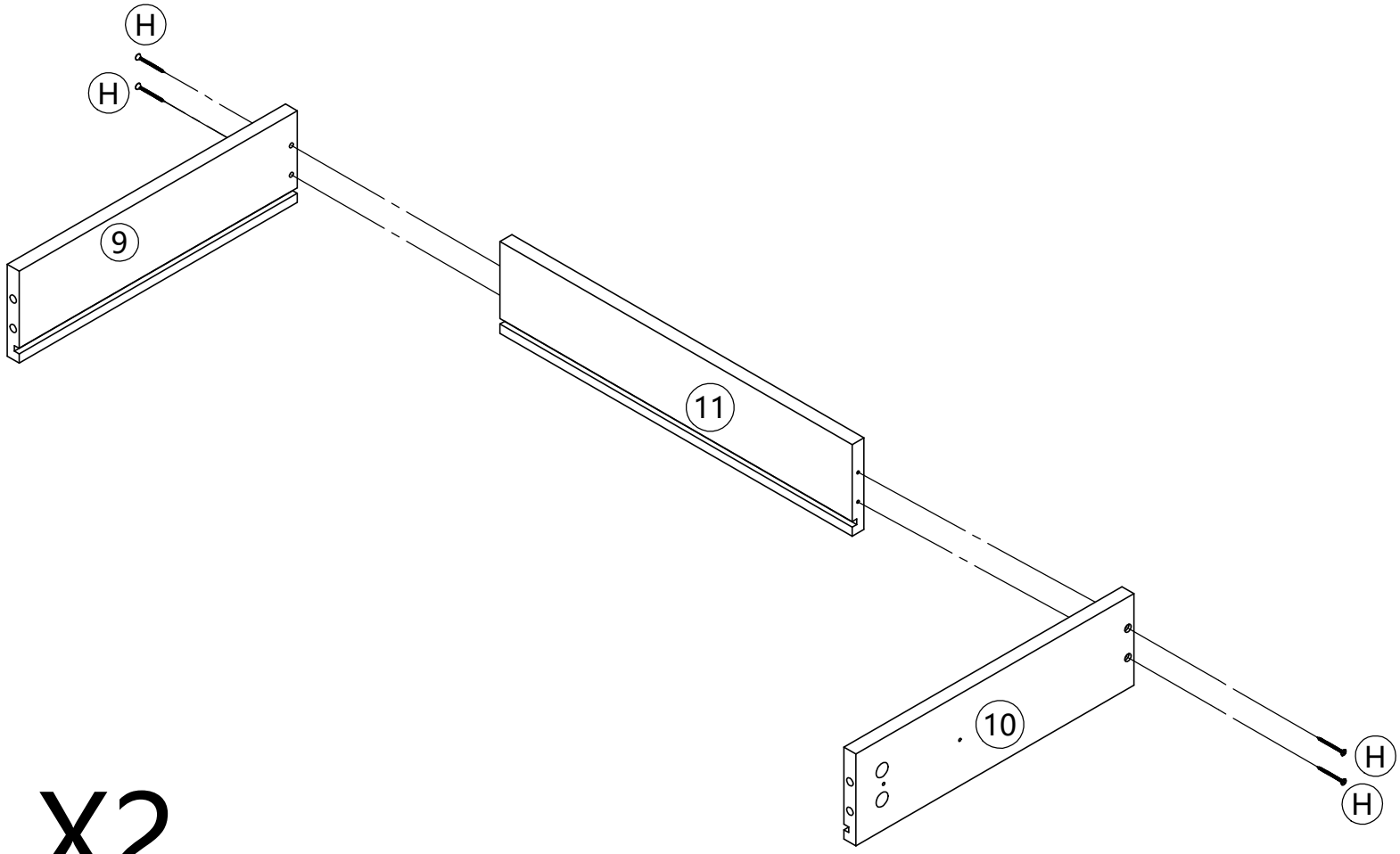

X2

Step 15

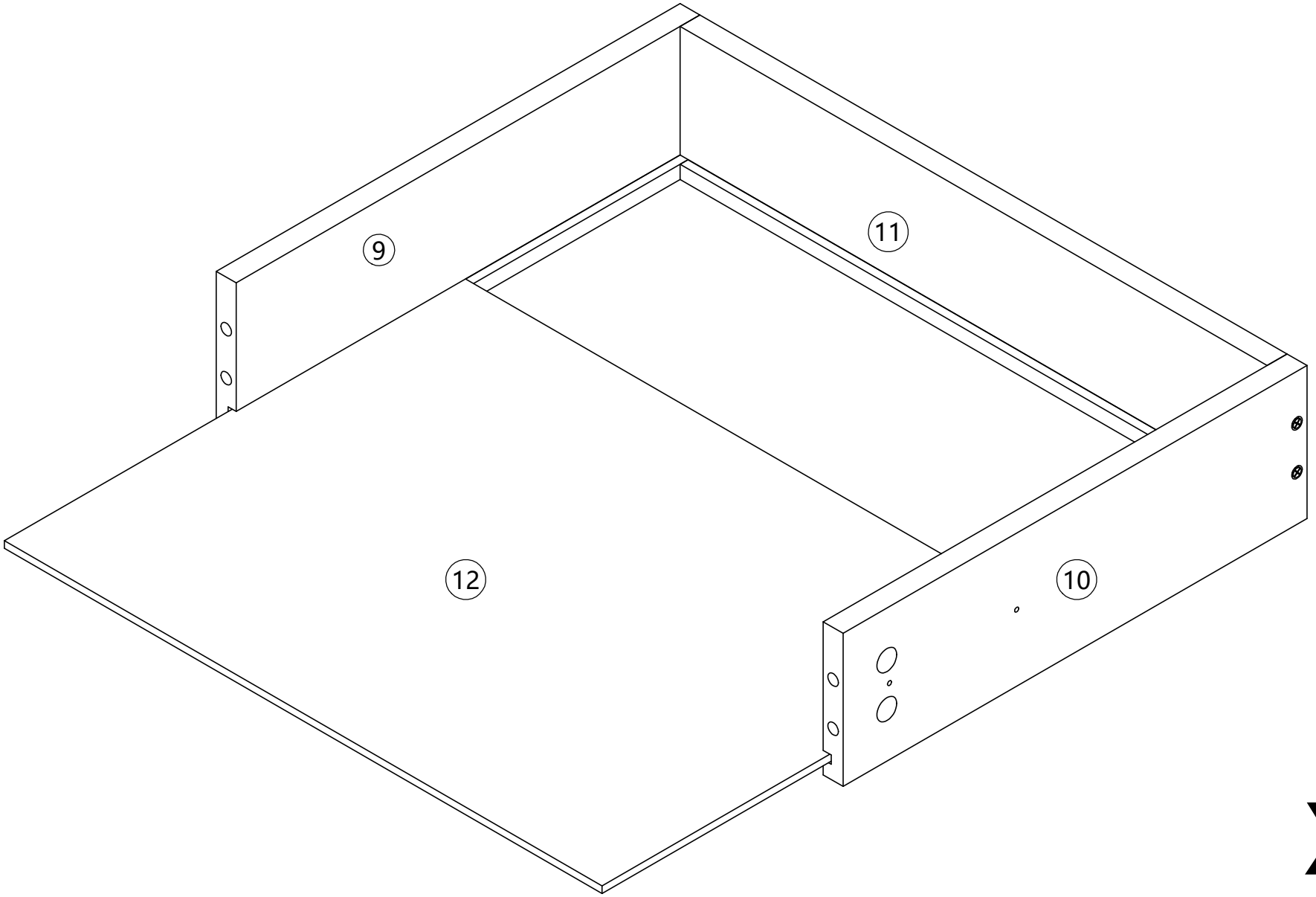

X2

Step 16

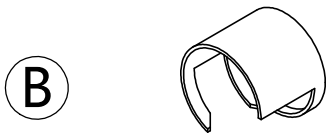

X8

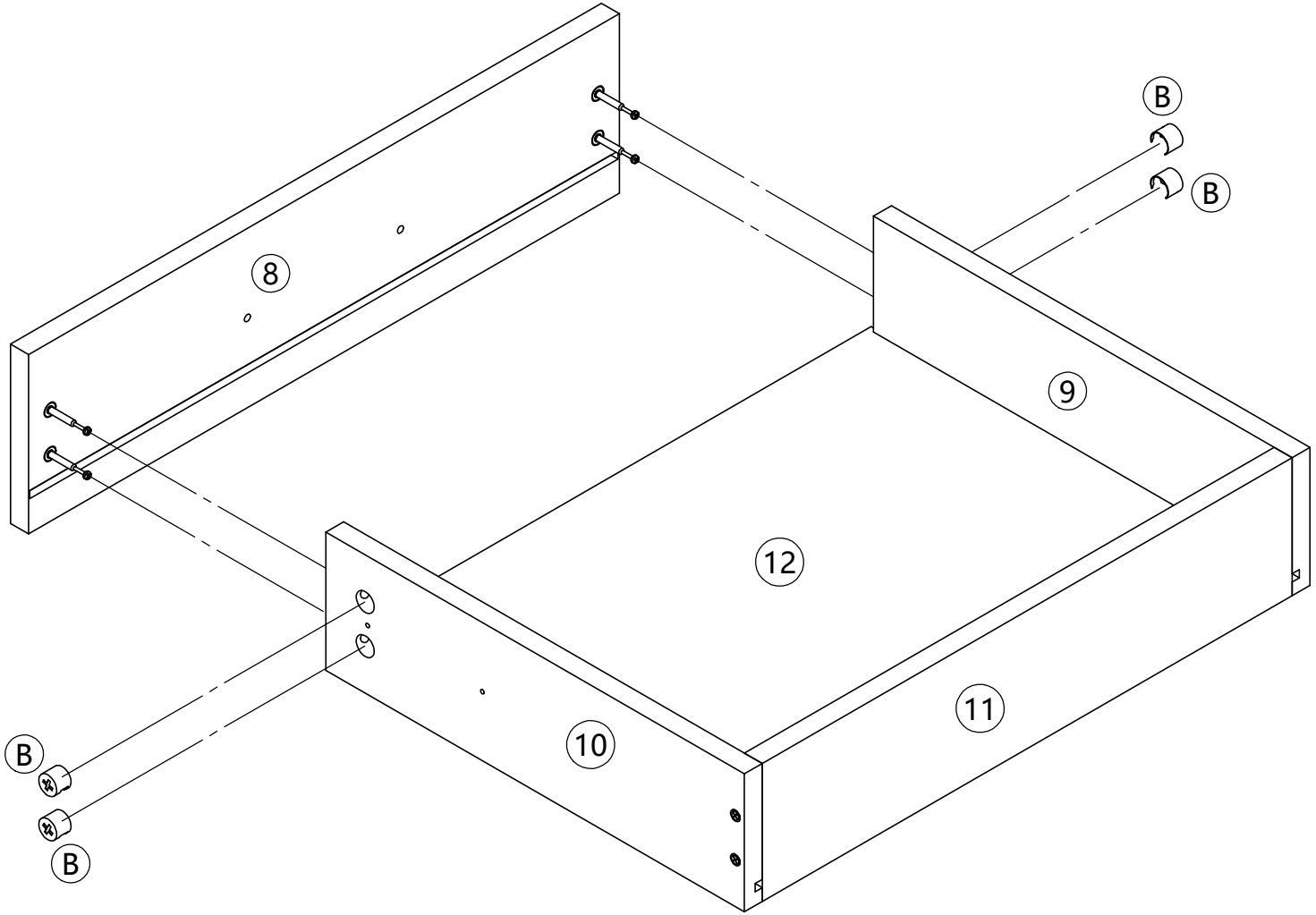

X2

Step 17

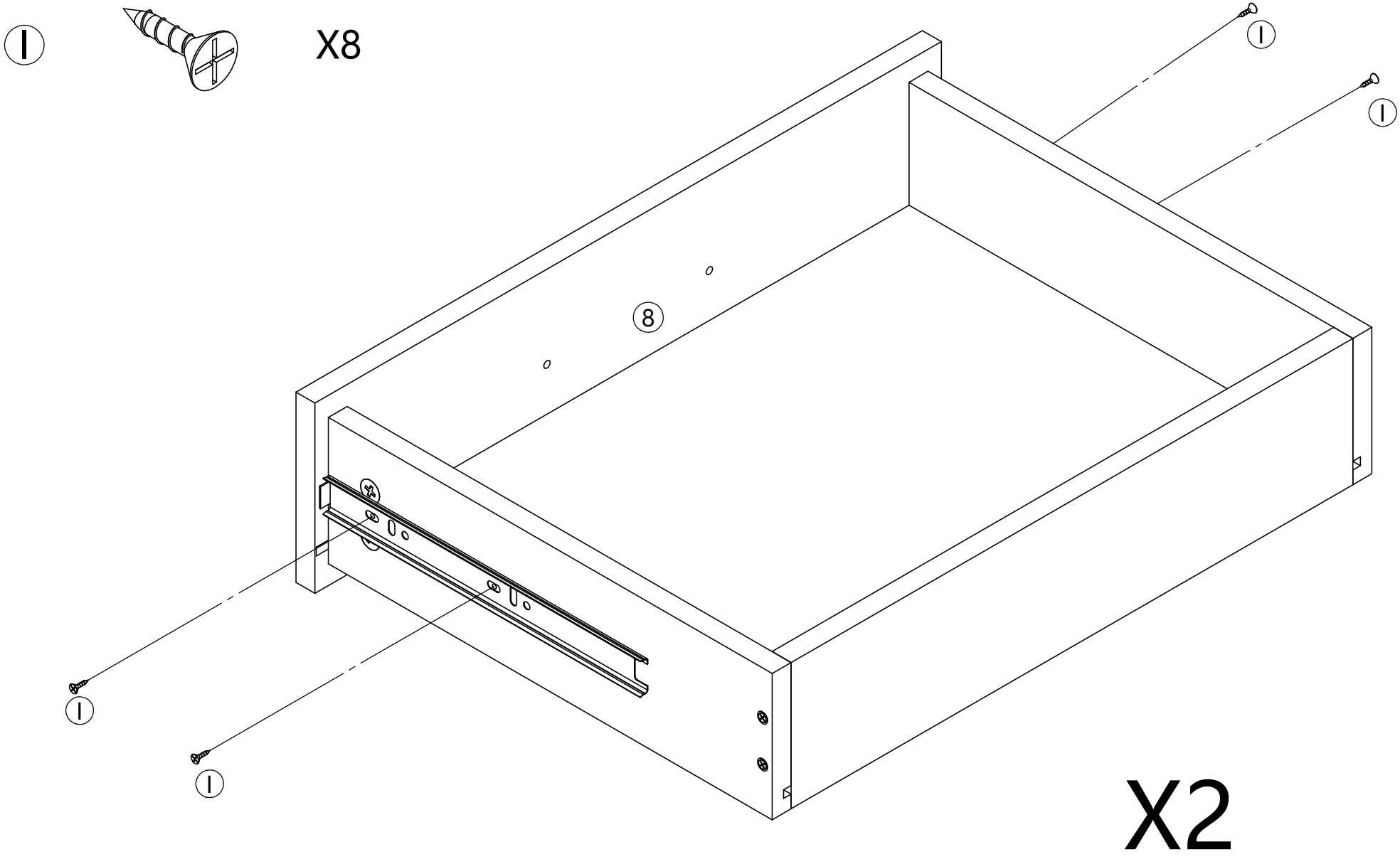

Step 18

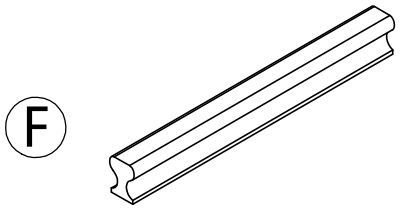

X2

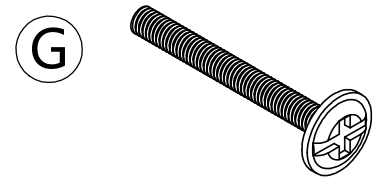

X4

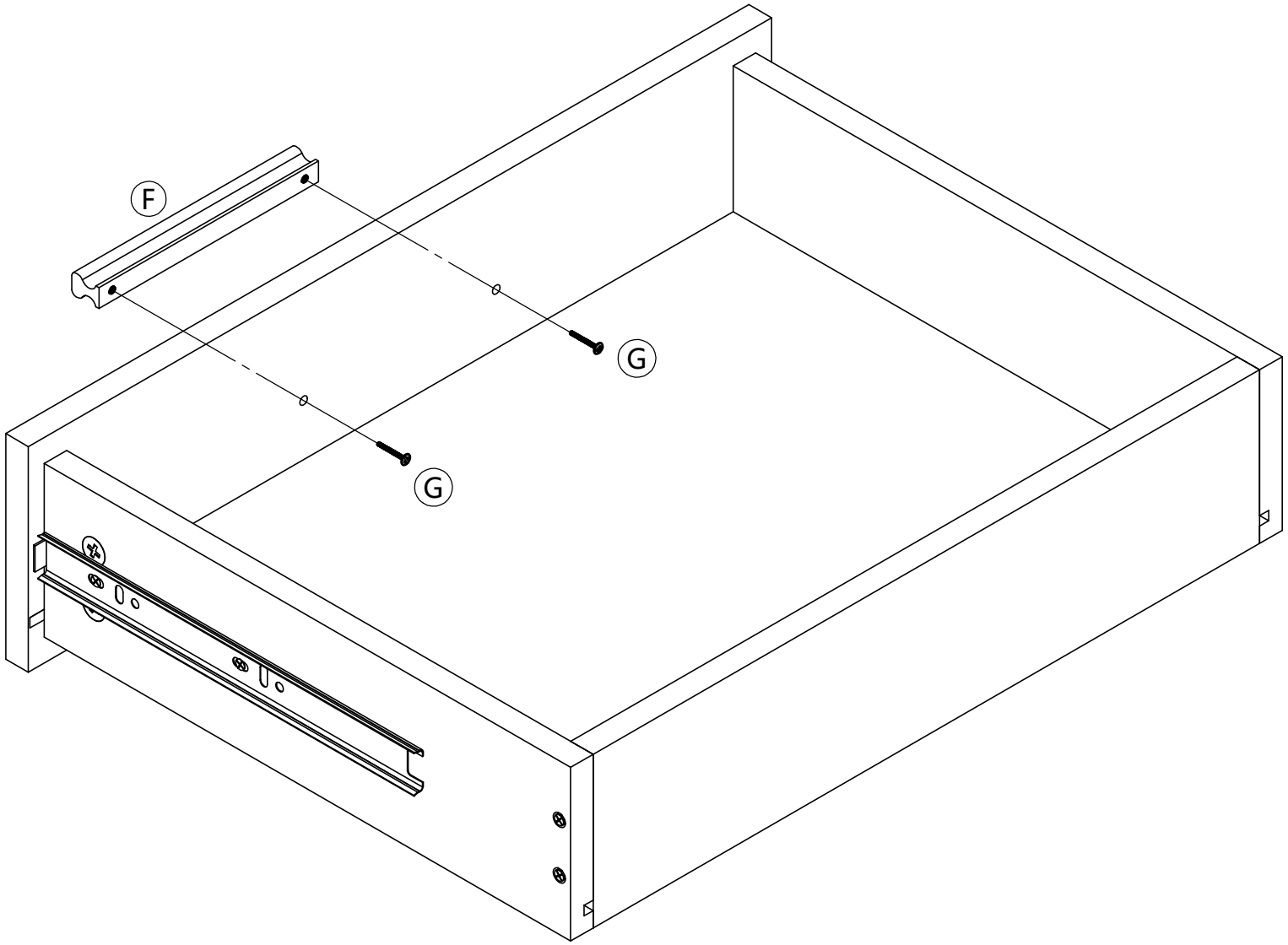

X2

Step 19

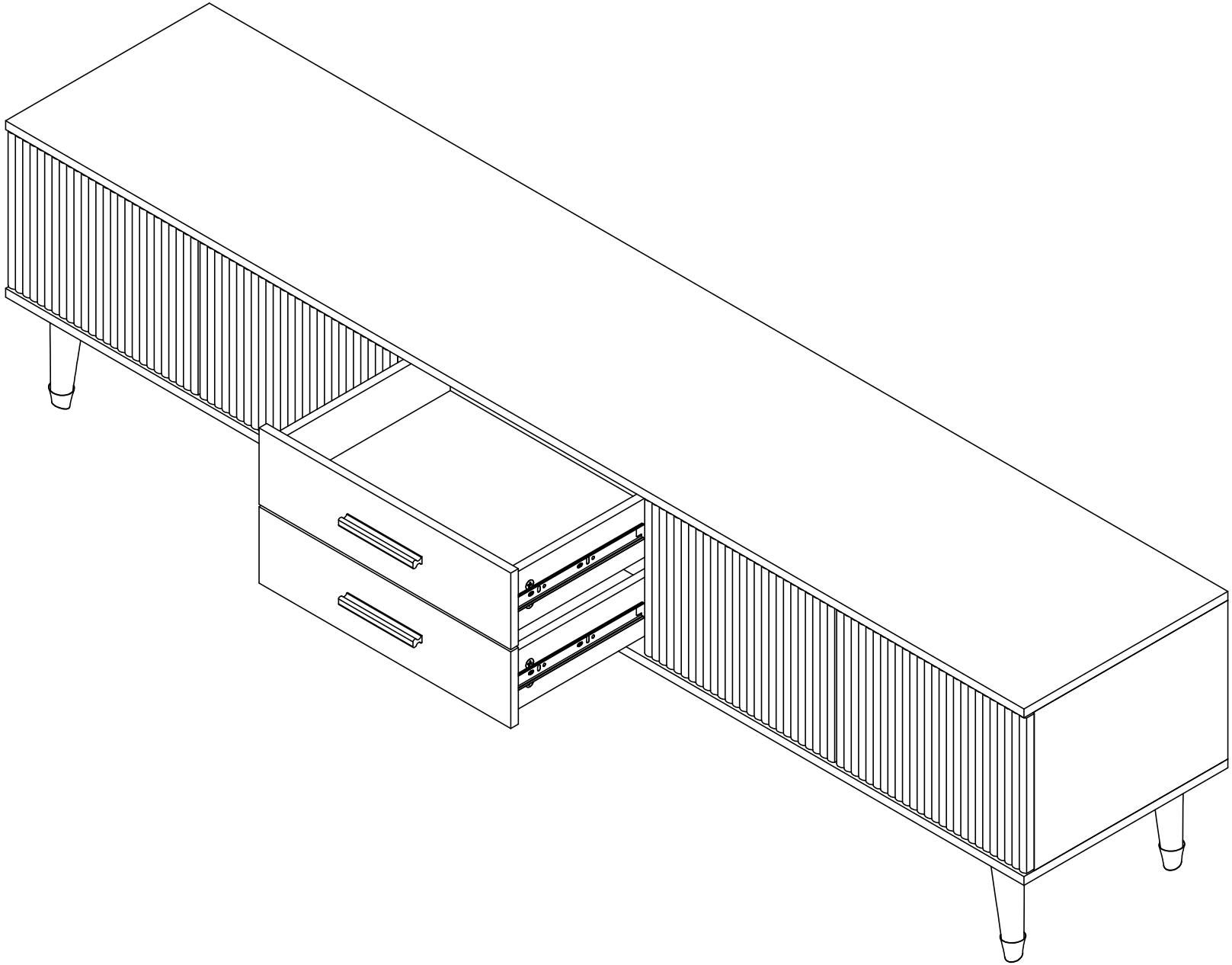

Step 20

Ⓙ 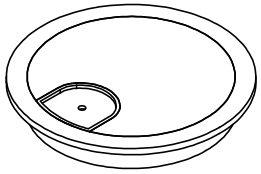 x2

