INSTALLATION AND SAFETY INSTRUCTIONS

FOR YOUR SAFETY

WARNING: BE SURE THE ELECTRICITY TO THE WIRES YOU ARE WORKING ON IS SHUT OFF; EITHER THE FUSE IS REMOVED OR THE CIRCUIT BREAKER IS SHUT OFF. GENERAL You don't need special tools to install this fixture. Be sure to follow the steps in the order given. Under no circumstances should a fixture be hung on house electrical wires, nor should a swag type fixture be installed on a ceiling which contains a radiant type heating system. Read instructions carefully. If you are unclear as to how to proceed, consult a qualified electrician. NOTE: Proper wiring is essential for the safe operation of this fixture.

GENERAL

You don't need special tools to install this fixture. Be sure to follow the steps in the order given. Under no circumstances should a fixture be hung on house electrical wires, nor should a swag type fixture be installed on a ceiling, which contains a radiant type heating system. Read instructions carefully. If you are unclear as to how to proceed, consult a qualified electrician.

NOTE: Proper wiring is essential for the safe operation of this fixture.

FIXTURE ASSEMBLY

Carefully removed the fixture from the carton and check that all parts are included as shown in figure. Be careful not to misplace any of the screws or parts, which are needed to install this fixture.

INSTALLATION

IMPORTANT: Do not attach fixture directly to outlet box.

STEP1: Thread the fixture loop (O) onto the nipple (R) tightly.

STEP2: Thread Nipple (I) into Loop(H) until snug.

STEP3: Take crossbar(L) assembly and mount to ceiling junction box(Q) with junction box screws(M). Tighten screws securely with screwdriver.

STEP4: Use two quick link(F) to mount to both ends of the chain (N)

STEP5: Put the rod (J) on the hook (k)

STEP6: Slip Loop Collar (E) and Canopy(G) over the chain, lift the fixture to attach to the ceiling loop(H), close the quick link.

STEP7: Lace the fixture's wires through the chain links and pull until taut. Feed the fixture wires through the Loop(H) and Nipple(I) and pull until taut

Proceed to connect wires:

GROUNDING INSTRUCTIONSSTEP 1: Insert the green grounding screw into the hole with two raised dimples on the circular strap. Wrap the ground wire from the fixture (if supplied) around the green grounding screw, then connect it to ground wire from the outlet box (if not fixed on the outlet box) using a wire connector (not supplied). If ground wire from the fixture is not supplied, wrap the ground wire (if not fixed on the outlet box) from the outlet box around the green grounding screw and tighten it.**NEVER CONNECT GROUND WIRE TO BLACK OR WHITE POWER**

GROUP A: Connect to Black House Wire	GROUP B: Connect to White House Wire
BLACK	WHITE
*PARALLEL WIRE (round & smooth)	*PARALLEL WIRE (square & ridged)
WHITE OR GREY WITH TRACER	WHITE OR GREY WITHOUT TRACER
BROWN GOLD OR BLACK WITHOUT TRACER	BROWN, GOLD OR BLACK WITH TRACER

SUPPLY WIRES.

STEP 2: Take note of the color of the wire(s) on your fixture.

Identify which group your fixture wire(s) falls into and connect the wires according to the directions below:

NOTE: When parallel wire (SPT-I & SPT-2) is used, the tracer wire is square shaped or ridged and the less tracer wire is round in shape or smooth (seen best when viewed from wire end.)

STEP 3: Take your fixture wire(s) from group A and place evenly against the black wire from the outlet box. Do NOT twist wires.together before using wire connectors.

STEP 4: Fit a wire connector (not supplied) over the wires and screw the connector clockwise until you feel a firmness

STEP 5: Try gently to pull the connector off the wires. If you can pull the connector off, carefully re-do steps 3 and 4, as above, and check again for a firm connection.

STEP 6: Connect the fixture wire from group B to the white wire from the outlet box in the same manner

FINAL ASSEMBLY

STEP1: After wires are connected, tuck them carefully inside outlet box.

STEP2: Put the Tube (S) on the socket (B) .

STEP3:Install the bulb (D) (NO INCLUDED BULB) on the socket (B)

STEP4: Put the glass shade (A) on the CUP (C) and Turn clock wise.

CLEANING

To clean, wipe fixture with a soft cloth. Clean glass with a mild soap. Do not use abrasive materials such as scouring pads or powders, steel wool or abrasive paper.

ORDERING PARTS

Keep this sheet for future reference, and in case you need to order replacement parts. All parts for this fixture can be ordered from place of purchase. Be sure to use exact wording from illustration when ordering parts.

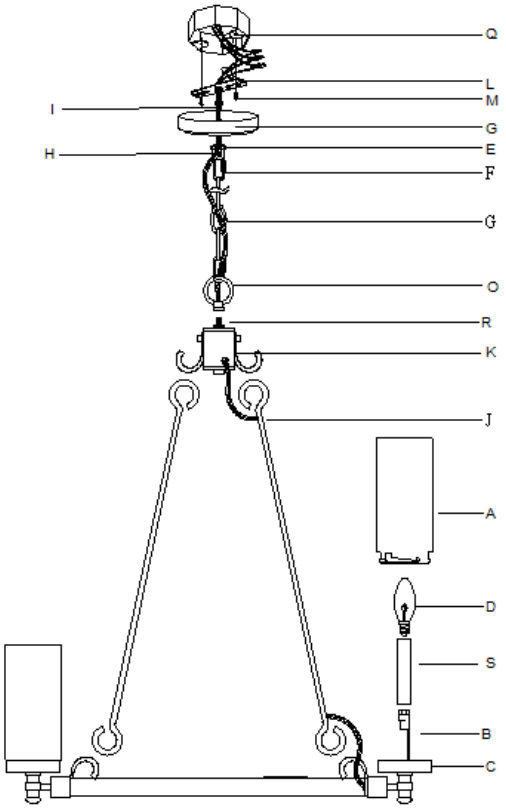

Line art shown may not exactly match the fixture enclosed. However, the installations do apply to this fixture.