BED FRAME

SIZE:FULL

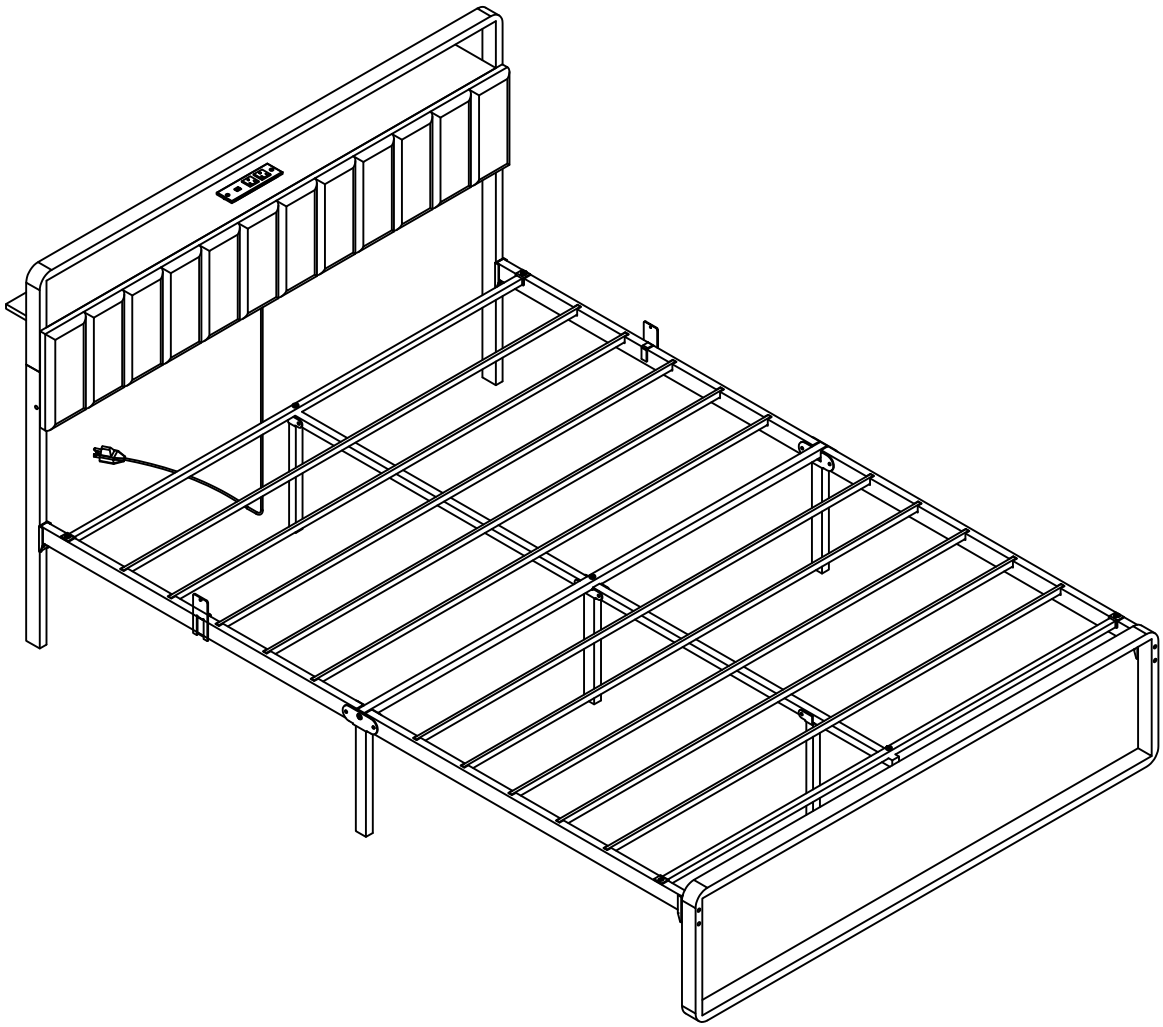

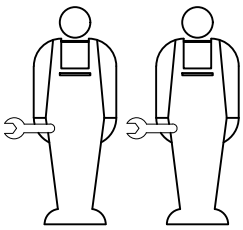

Suggestion:

For a simpler and quicker assembly process,
we recommend that two people work together.
Due to the product's structure, the estimated assembly time is 60 minutes.

IMPORTANT:

1. Please read the instructions carefully before assembling the product.
2. Before starting the assembly process, check the package carefully to make sure all necessary boards and parts are included.
3. If there are any defective or missing parts after unpacking, please stop assembly and immediately contact us.
4. Before assembly, put all parts and boards in an open area. Ensure that you have the correct parts before screwing them in place.

⚠ Warning:

1. During assembly, keep all small objects out of the reach of children, as they may be fatal if swallowed or inhaled
2. Never allow children to climb or play around the product to protect children from injury caused by the tilting of the product.
3. To avoid the potential dangers of suffocation, please keep all parts and packaging away from children.

Parts Identification1/1

Not actual size

1  Q'ty: 1	2  Q'ty: 1	3 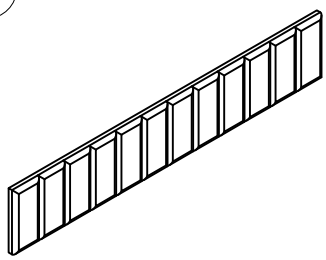 Q'ty: 1
4 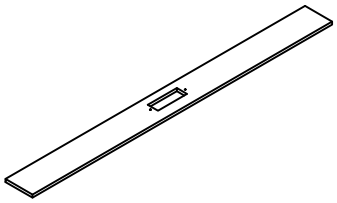 Q'ty: 1	5 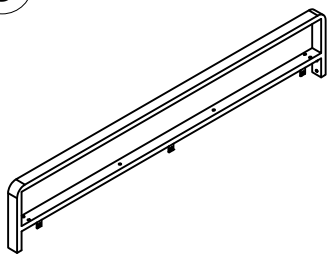 Q'ty: 1	6 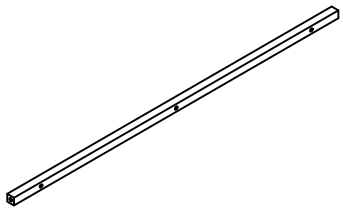 Q'ty: 1
7 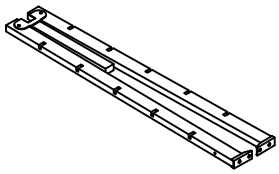 Q'ty: 2	8 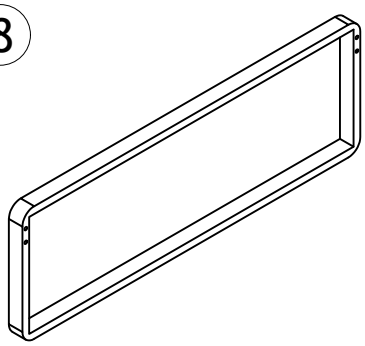 Q'ty: 1	9 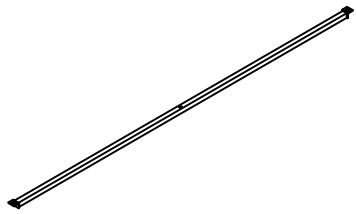 Q'ty: 2
10 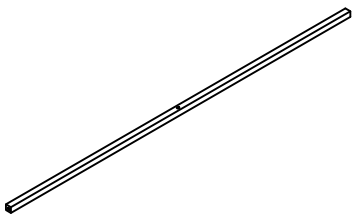 Q'ty: 1	11 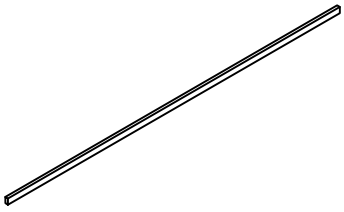 Q'ty: 10	12 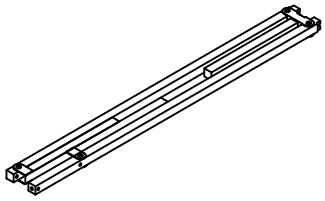 Q'ty: 1

Hardware List

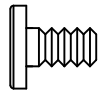

Ø1/4" x 14mm

A	x 15+2

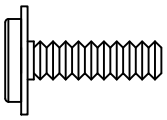

Ø1/4" x 28mm

B	x 12+1

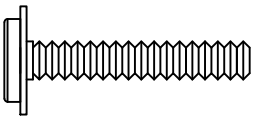

Ø1/4" x 50mm

C	x 13+1



Ø4 x 12mm

D	x 2+1

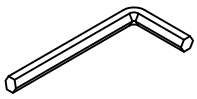

M4

E	x 1

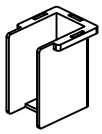

F	x 20+2

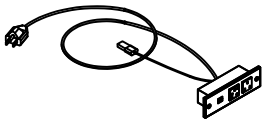

G	x 1

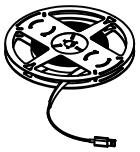

H	x 1

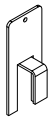

I	x 2



J	x 2

★In many cases, we include additional hardware. So after following the assembly instructions, don’t worry if there are still extra pieces left over-they’re included as a “just in case” for your convenience.

★NOTE：When assembling, please do not tighten the screws one by one completely first, until making sure that all the corresponding screws are placed in the right positions.

Self equipped tools

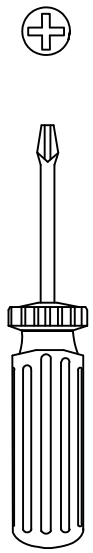

Cross Screwdriver
(Not included)

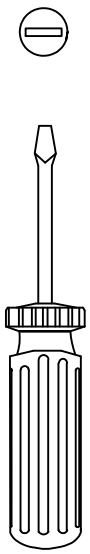

Slotted Screwdriver
(Not included)

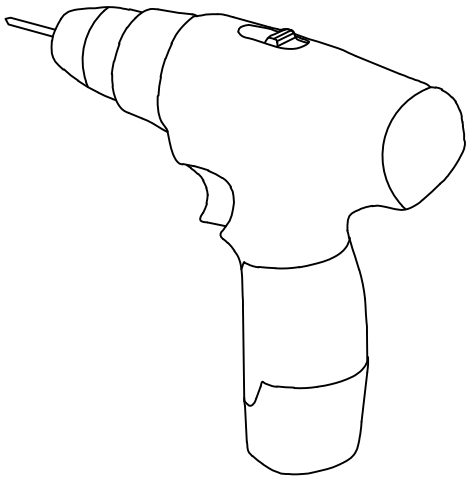

Electric Drill
(Not included)

Parts Identification

Not actual size

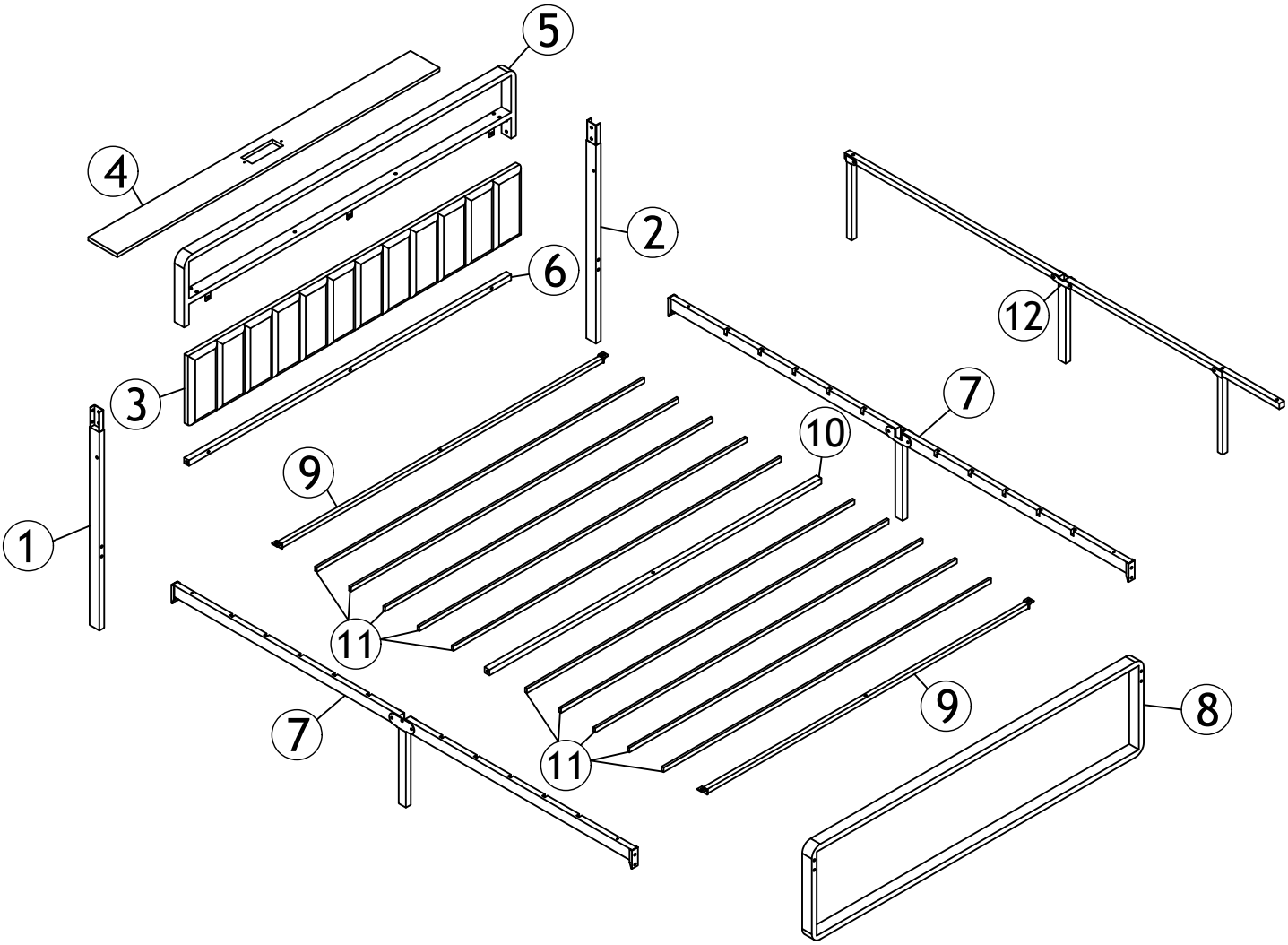

ATTENTION

When you begin each step, please check carefully whether you have taken the correct parts, so as not to use the wrong parts and cause the wrong assembly.

We recommend that you do not rush to tighten the screws. It is best to tighten the screws to two-thirds first, after all the steps are finished and the position is well adjusted, then tighten.

STEP 1

Please tighten the bolts to 80% first, and tighten all bolts 100% after all parts are assembled.

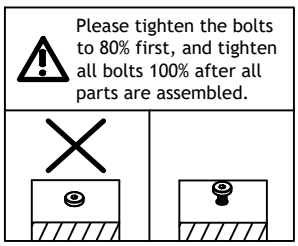

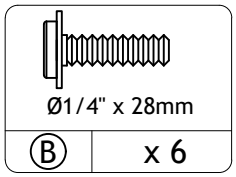

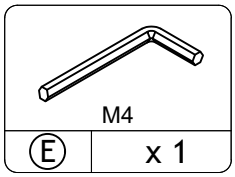

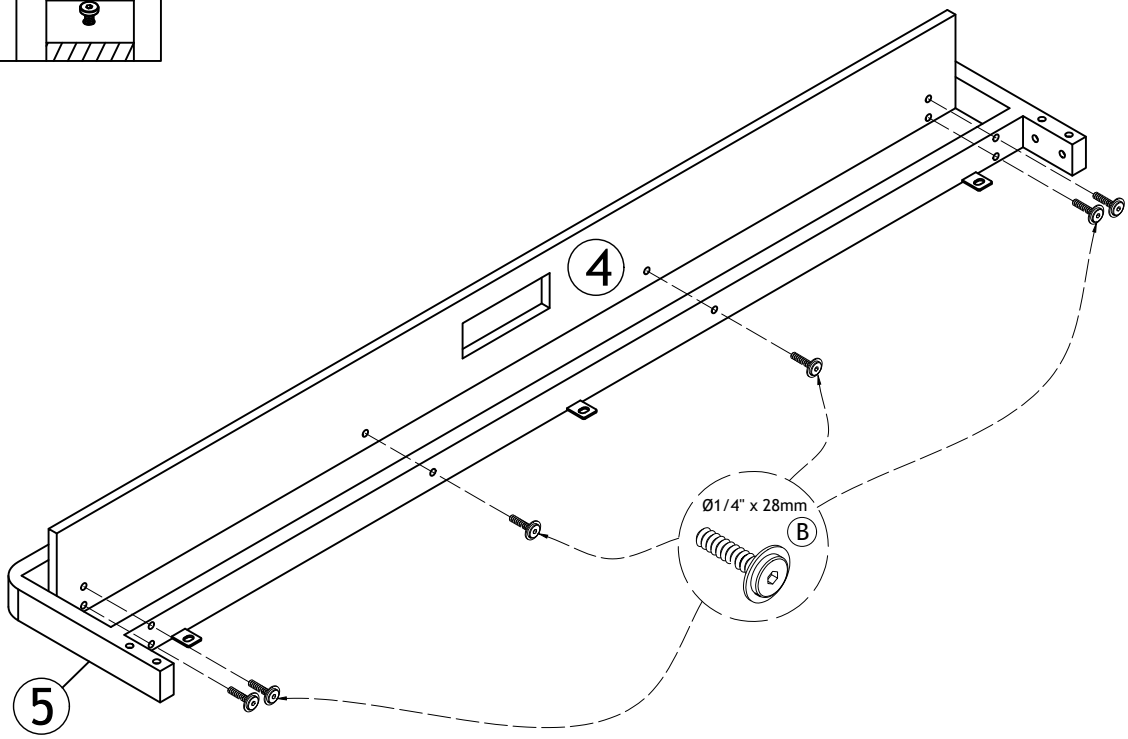

STEP 2

Please tighten the bolts to 80% first, and tighten all bolts 100% after all parts are assembled.

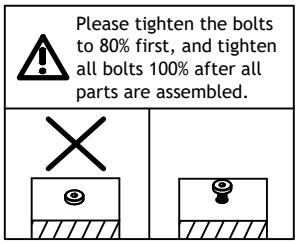

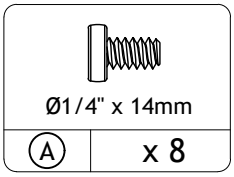

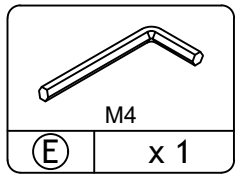

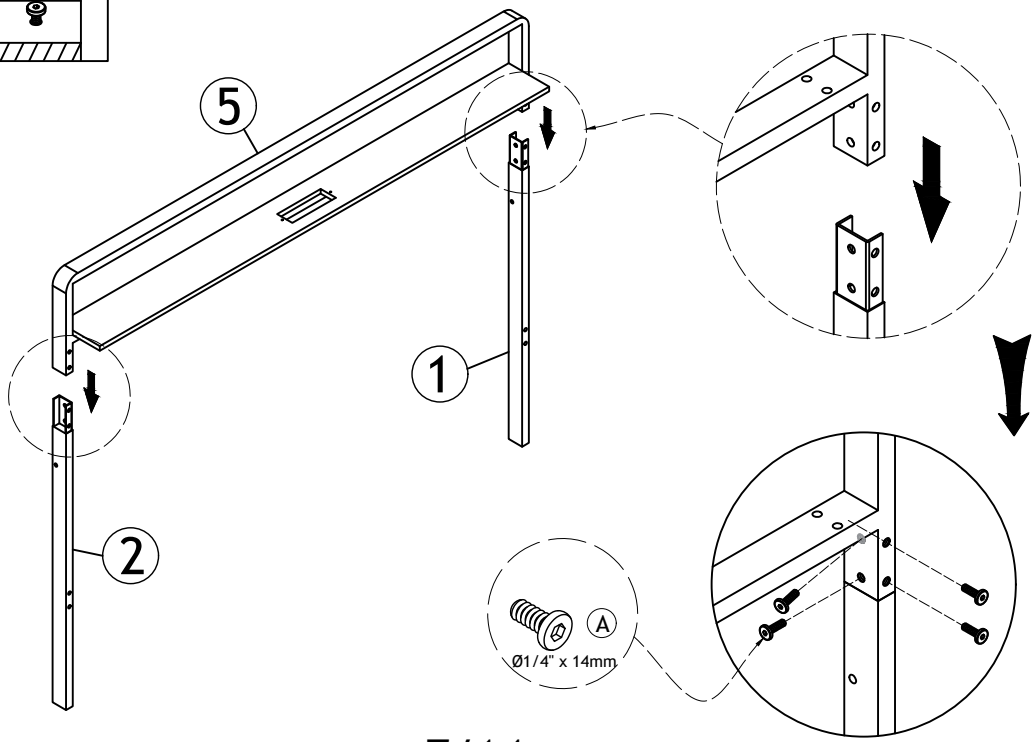

STEP 3

Please tighten the bolts to 80% first, and tighten all bolts 100% after all parts are assembled.

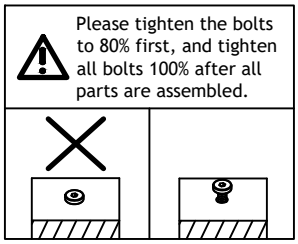

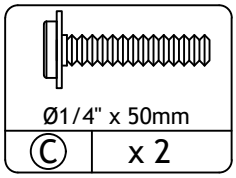

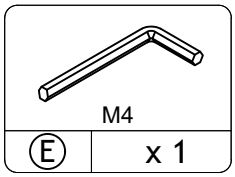

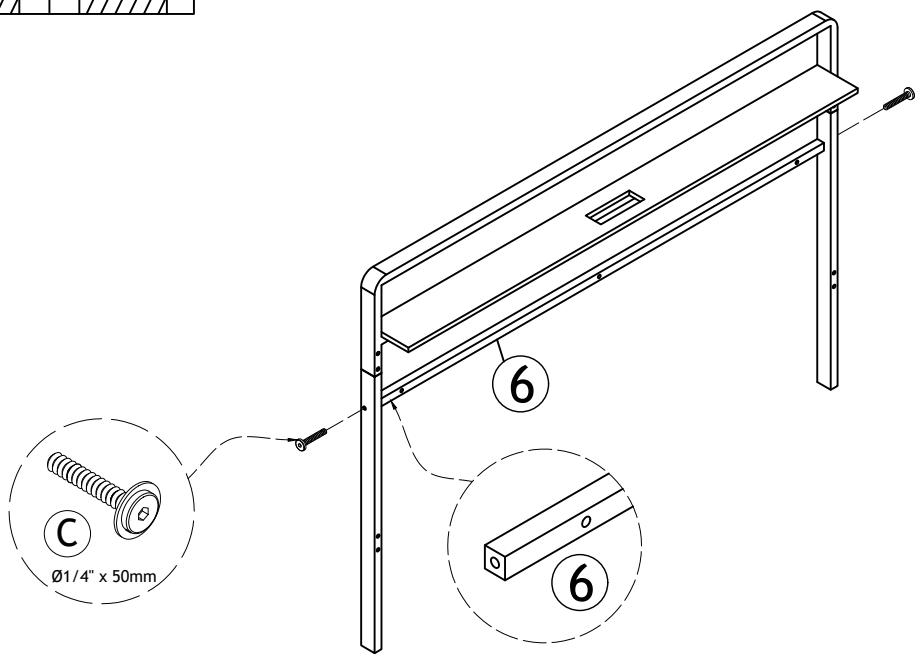

STEP 4

Please tighten the bolts to 80% first, and tighten all bolts 100% after all parts are assembled.

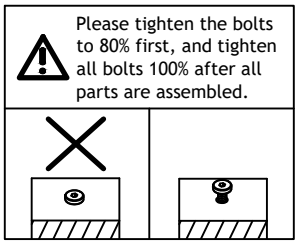

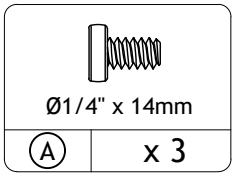

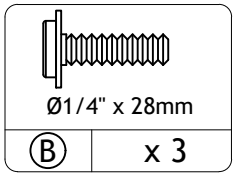

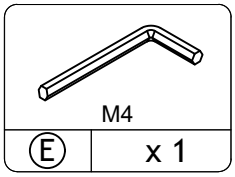

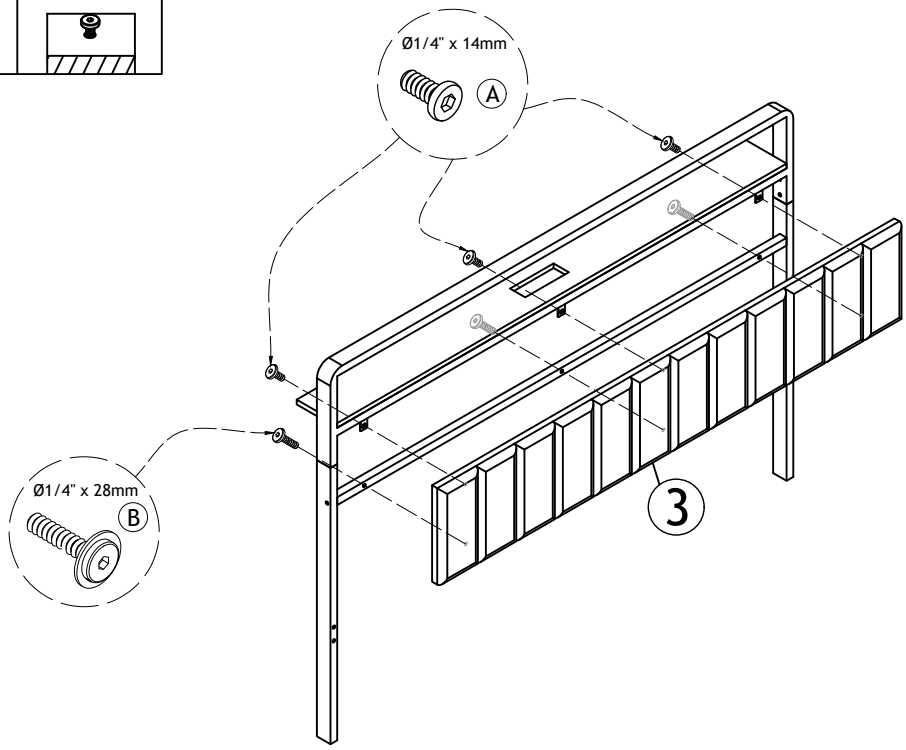

STEP 5

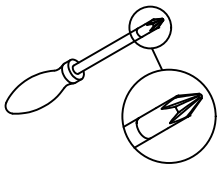

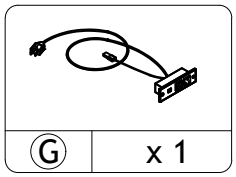

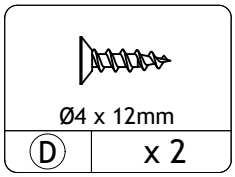

Please screws in this step need to be tightened

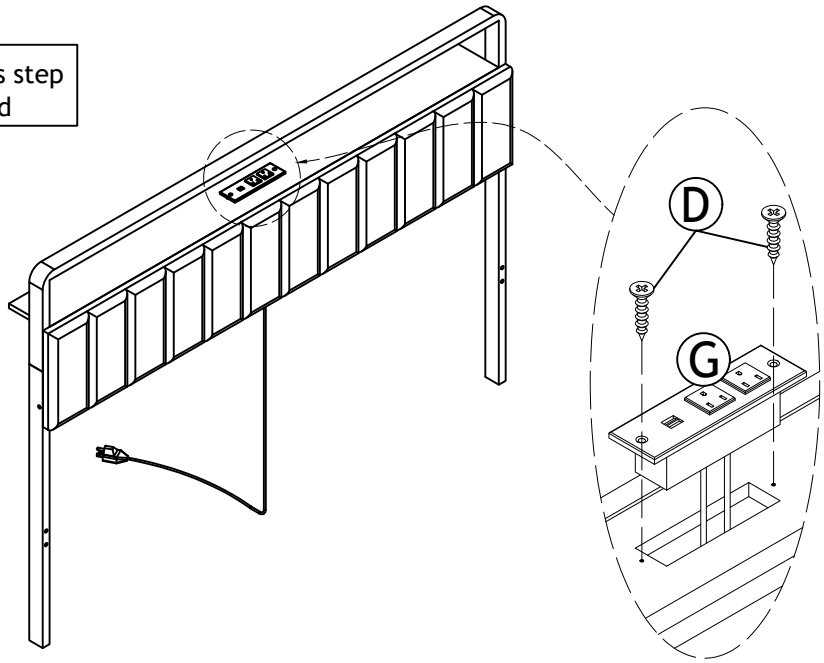

STEP 6

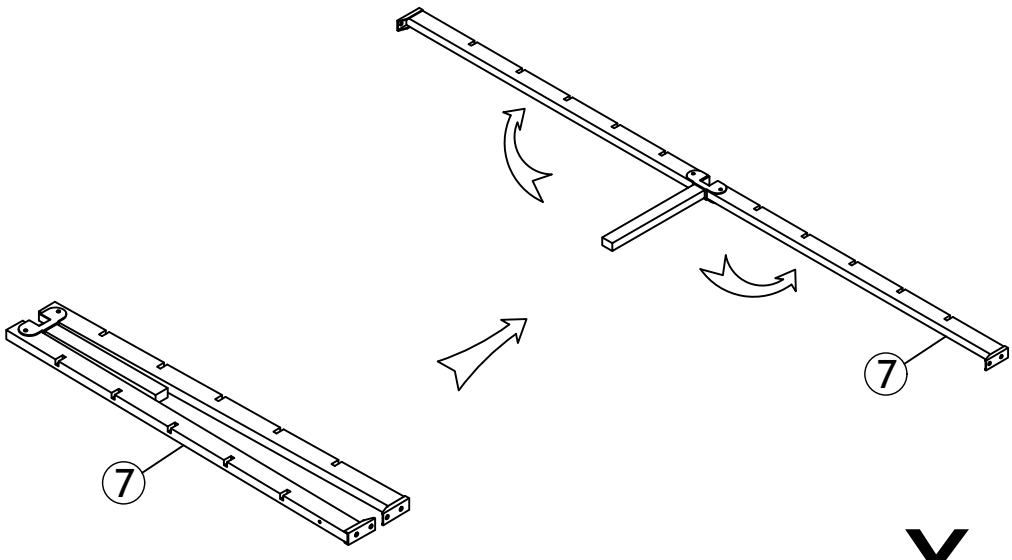

x 2

Expand the folded portion

STEP 7

Please tighten the bolts to 80% first, and tighten all bolts 100% after all parts are assembled.



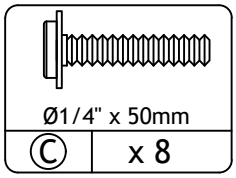

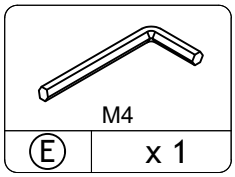

STEP 8

Please tighten the bolts to 80% first, and tighten all bolts 100% after all parts are assembled.



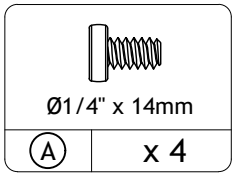

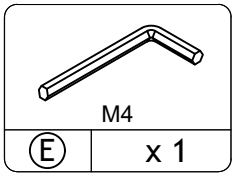

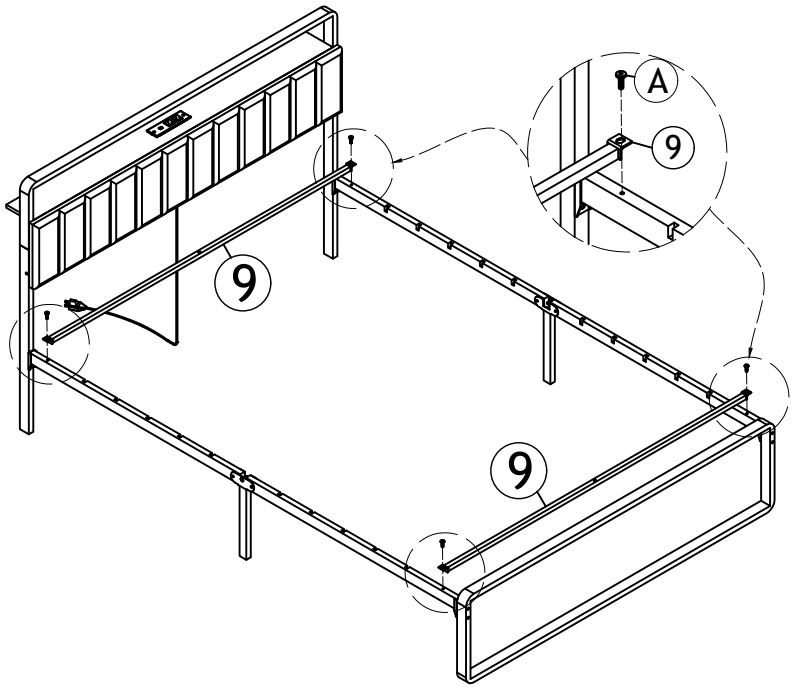

STEP 9

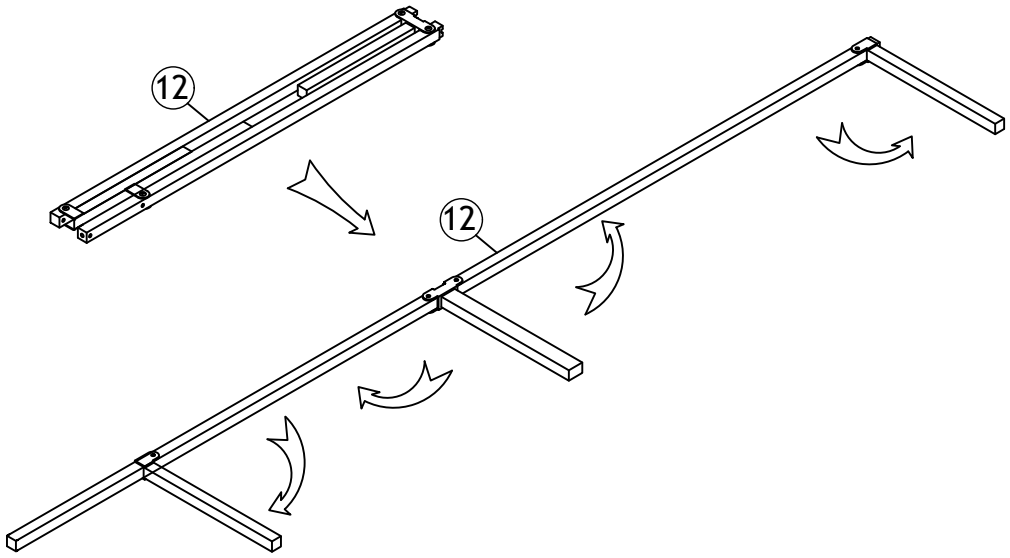

Expand the folded portion

STEP 10

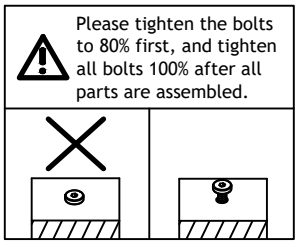

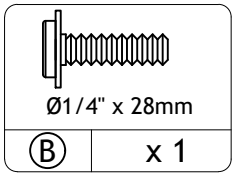

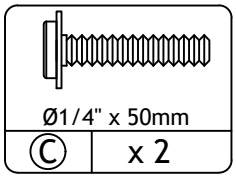

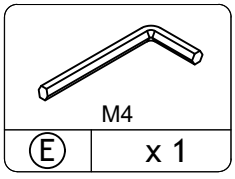

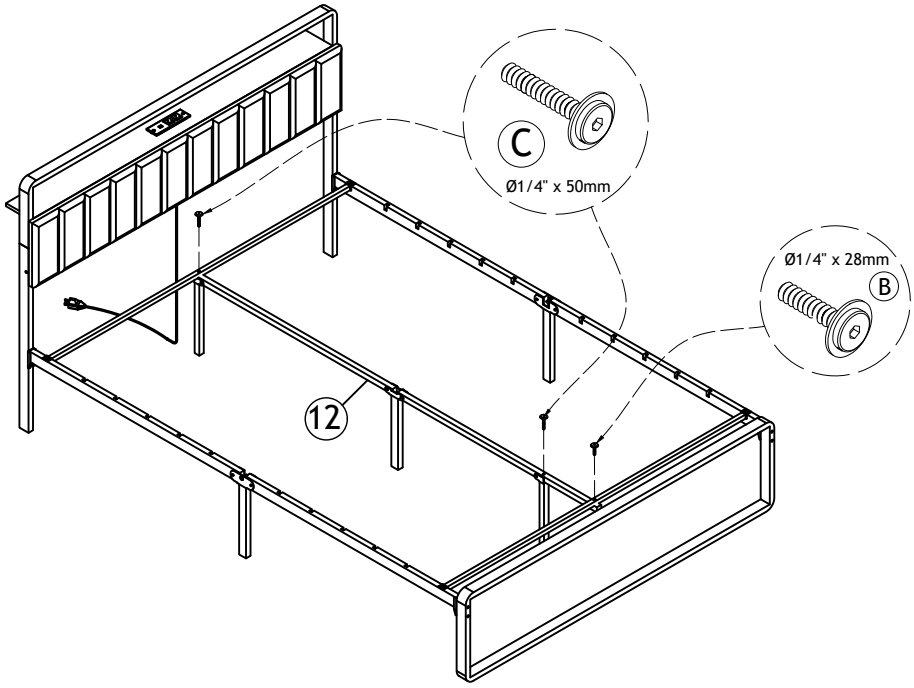

STEP 11

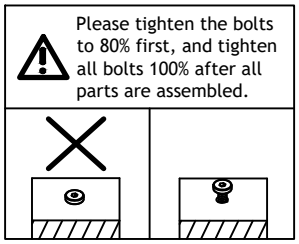
Please tighten the bolts to 80% first, and tighten all bolts 100% after all parts are assembled.

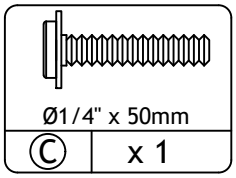
Ø1/4" x 50mm
C
x 1

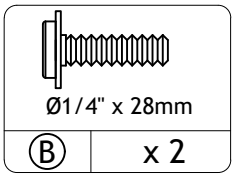
Ø1/4" x 28mm
B
x 2

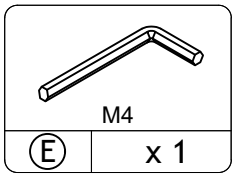
M4
E
x 1

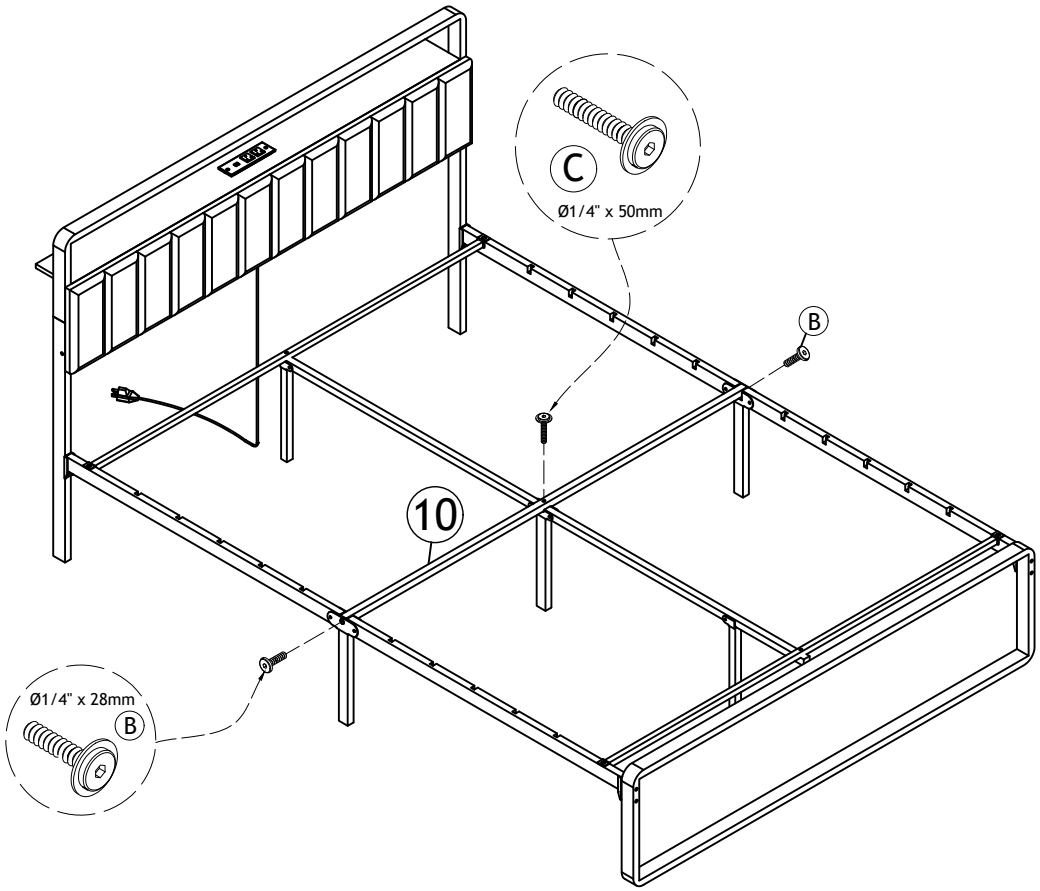
C
Ø1/4" x 50mm
B
10
Ø1/4" x 28mm
B

STEP 12

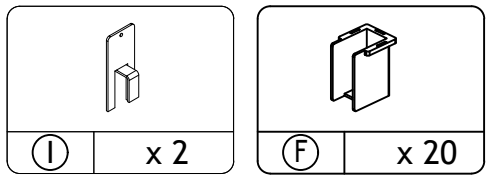

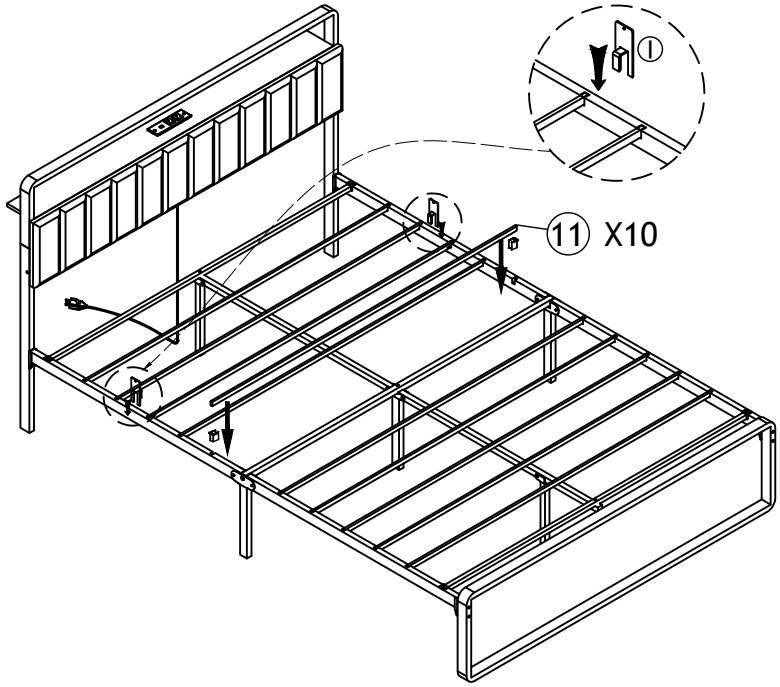

Assemble the slats

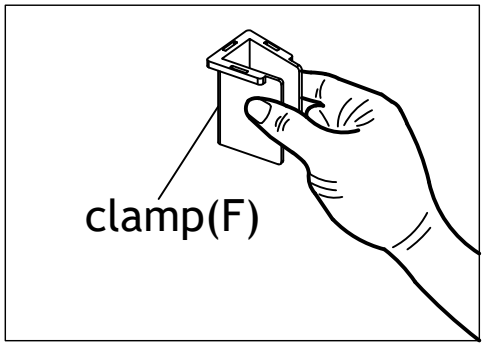

1. Squeeze the clamp (F) tightly.

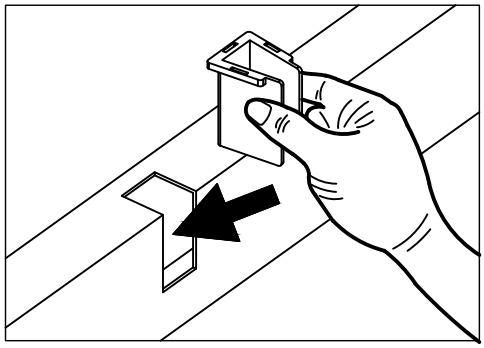

2.Put the clamp into the gaps.

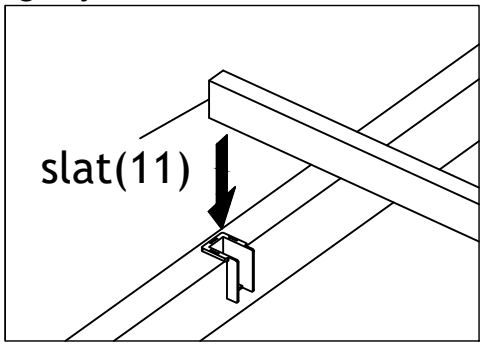

3.Put the slat (11) into the clamp.

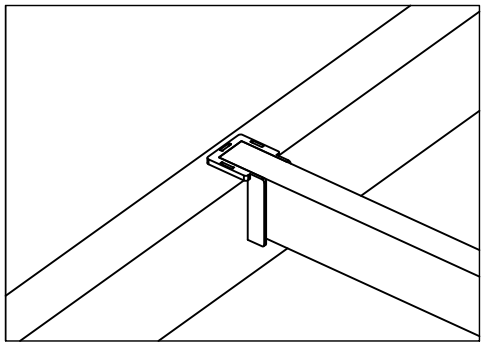

4.Finished.

STEP 13

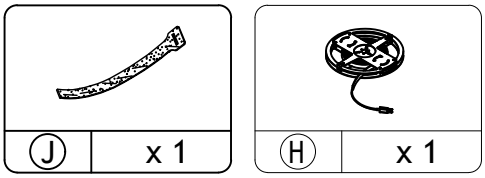

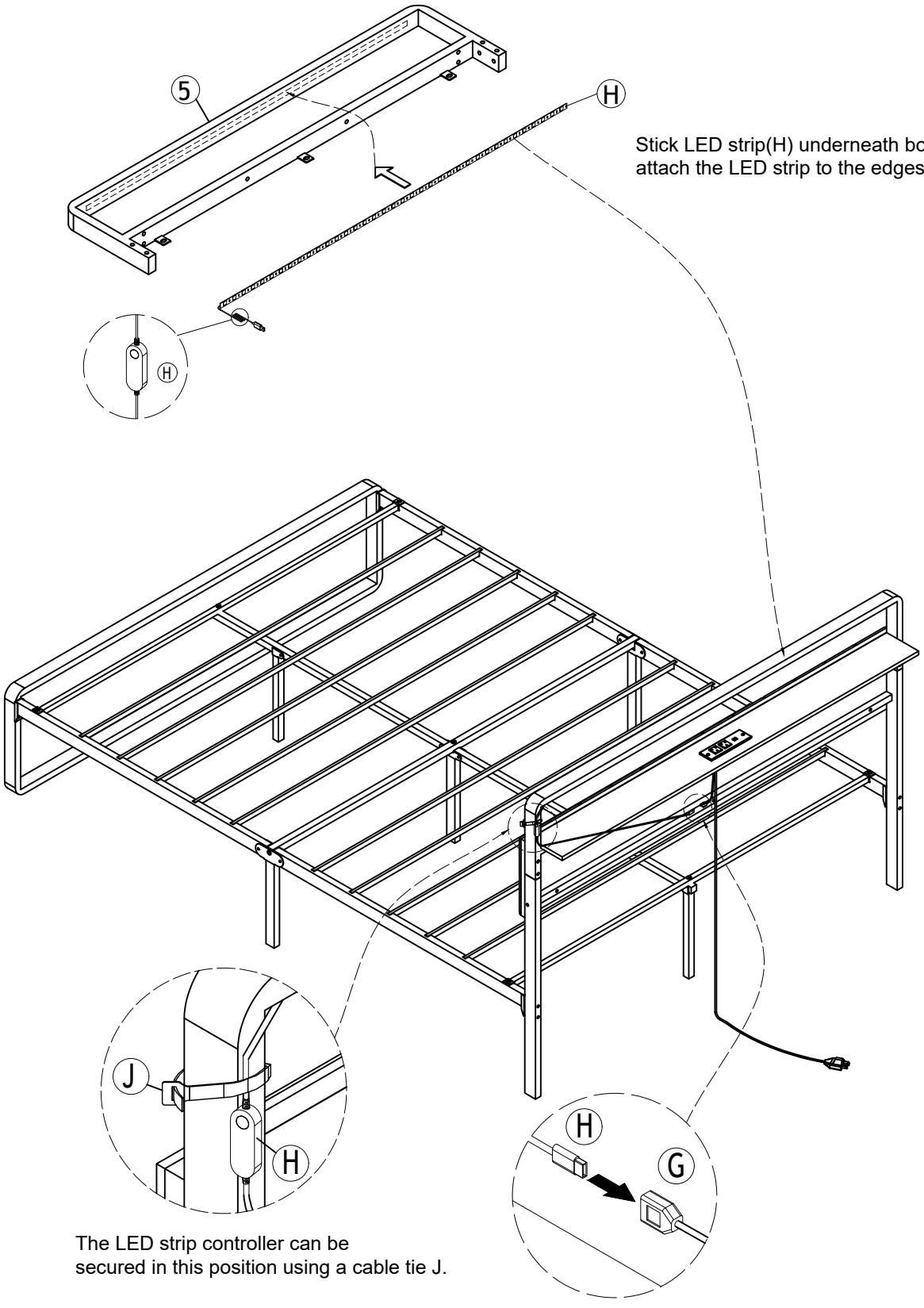

Stick LED strip(H) underneath board(5), attach the LED strip to the edges.

The LED strip controller can be secured in this position using a cable tie J.