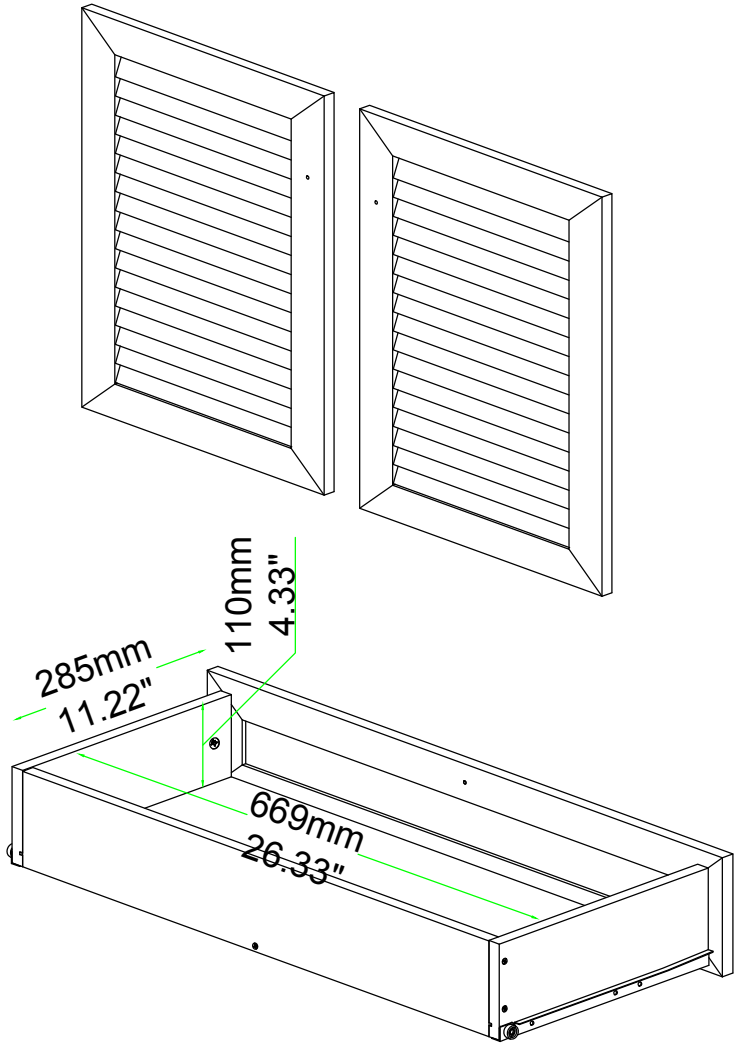
285mm
11.22"
110mm
4.33"
669mm
26.33"

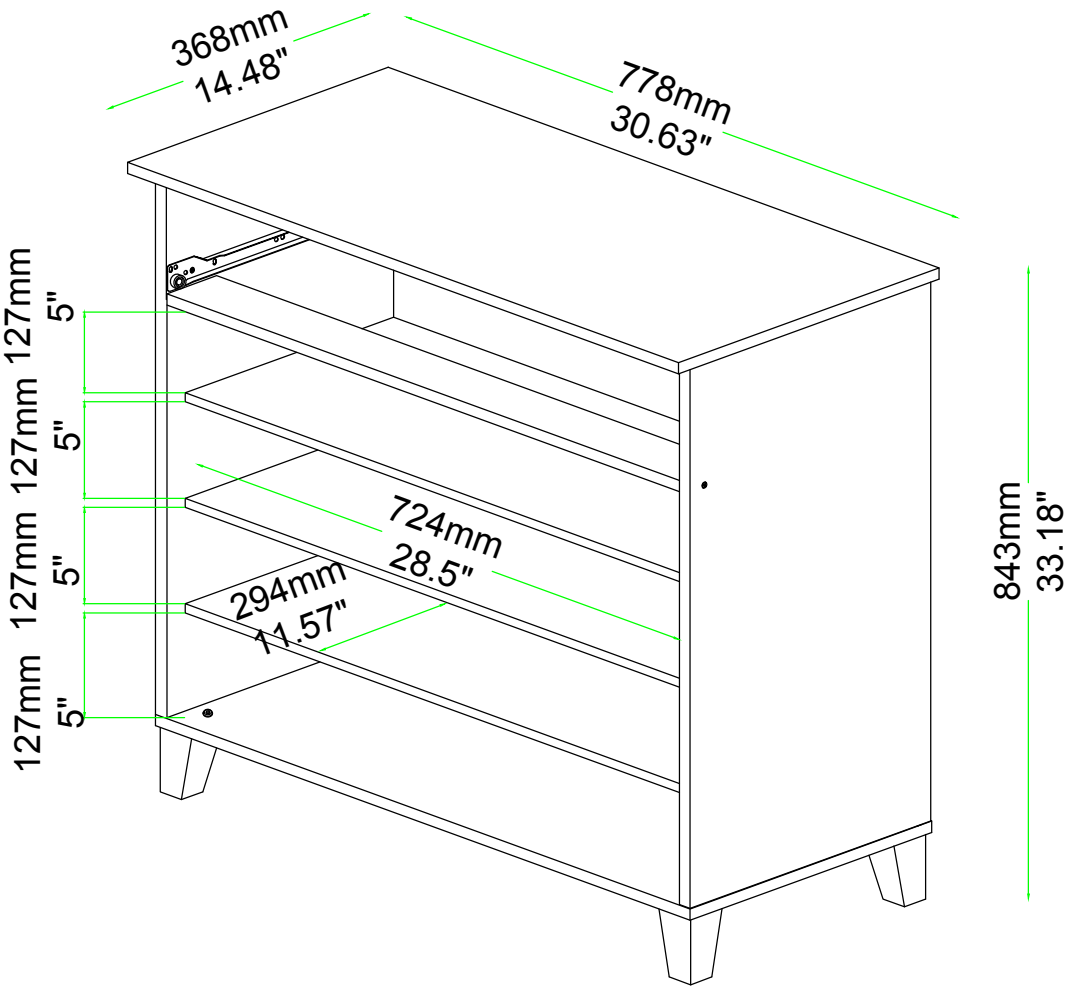
368mm
14.48"
778mm
30.63"
127mm
5"
127mm
5"
127mm
5"
127mm
5"
724mm
28.5"
294mm
11.57"
843mm
33.18"