SKU:H10063

THE BED
ASSEMBLY INSTRUCTIONS

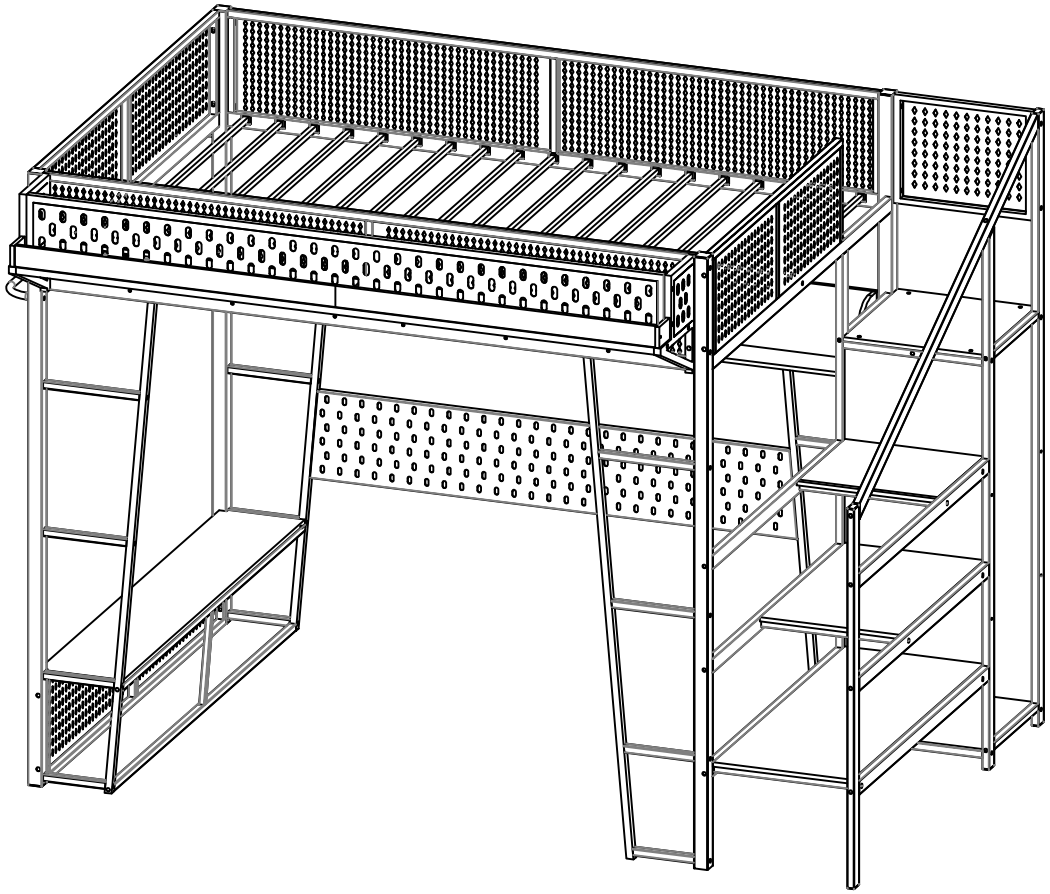

Attention

Please use the screws correctly according to the instructions. Thank you.

SAFETY WARNINGS AND GENERAL NOTES:

1. Follow the information on the warnings on the bunk bed end structure and on the carton. Do not remove the warning label from the bed.
2. Always use the recommended size mattress on mattress support, or both, to help prevent the likelihood of entrapment or falls.
3. Do not allow children under 6 years of age to use the upper bunk.
4. Periodically check and ensure the guardrail, ladder and other components are in their proper position, free from damage, and all connectors are tight.
5. Do not allow horseplay on or under beds.
6. Always prohibit jumping on the bed.
7. Prohibit more than one person on upper bunk.
8. Always use the ladder for entering and leaving the upper bunk.
9. Do not use substitute parts. Contact the manufacturer or dealer for replacement parts.
10. Use of a night-tight may provide added safety precaution for a child using the upper bunk.
11. Always use guardrails on both long sides of the upper bunk.
12. If the bunk bed will be placed next to a wall, the guardrail that runs the full length of the bed should be placed against the wall to prevent entrapment between the bed and the wall.
The use of water or sleep flotation mattresses is prohibited.
13. **STRANGULATION HAZARD**-Never attach or hang items to any part of the bunk bed that are not designed for use with the bed; for example, but not limited to, hooks, belts and jump ropes.
14. Keep these instructions for future reference.
15. We recommend assembling your bunk bed on the shipping carton to protect your floor or carpet.
16. Be certain all staples are out of the box before beginning assembly on the shipping carton.
17. USE ONLY MATTRESSES WHICH ARE AS THE TABLE BELOW ON UPPER AND ON LOWER BUNKS.

Up bed (bunk bed and tribed included)

Mattress size	Length	Width	Thickness
FULL Standard	74"-75"	53"-54"	6"max

18. SURFACE OF MATTRESS MUST BE AT LEAST 5"(127MM) BELOW THE UPPER EDGE OF GUARDRAILS.
19. Replacement Parts:
Replacement Parts, including additional guardrails, may be obtained from any of our （Shenzhen Yuefeng Zhiqi Technology Co.,Ltd）dealers.

Bed parts view

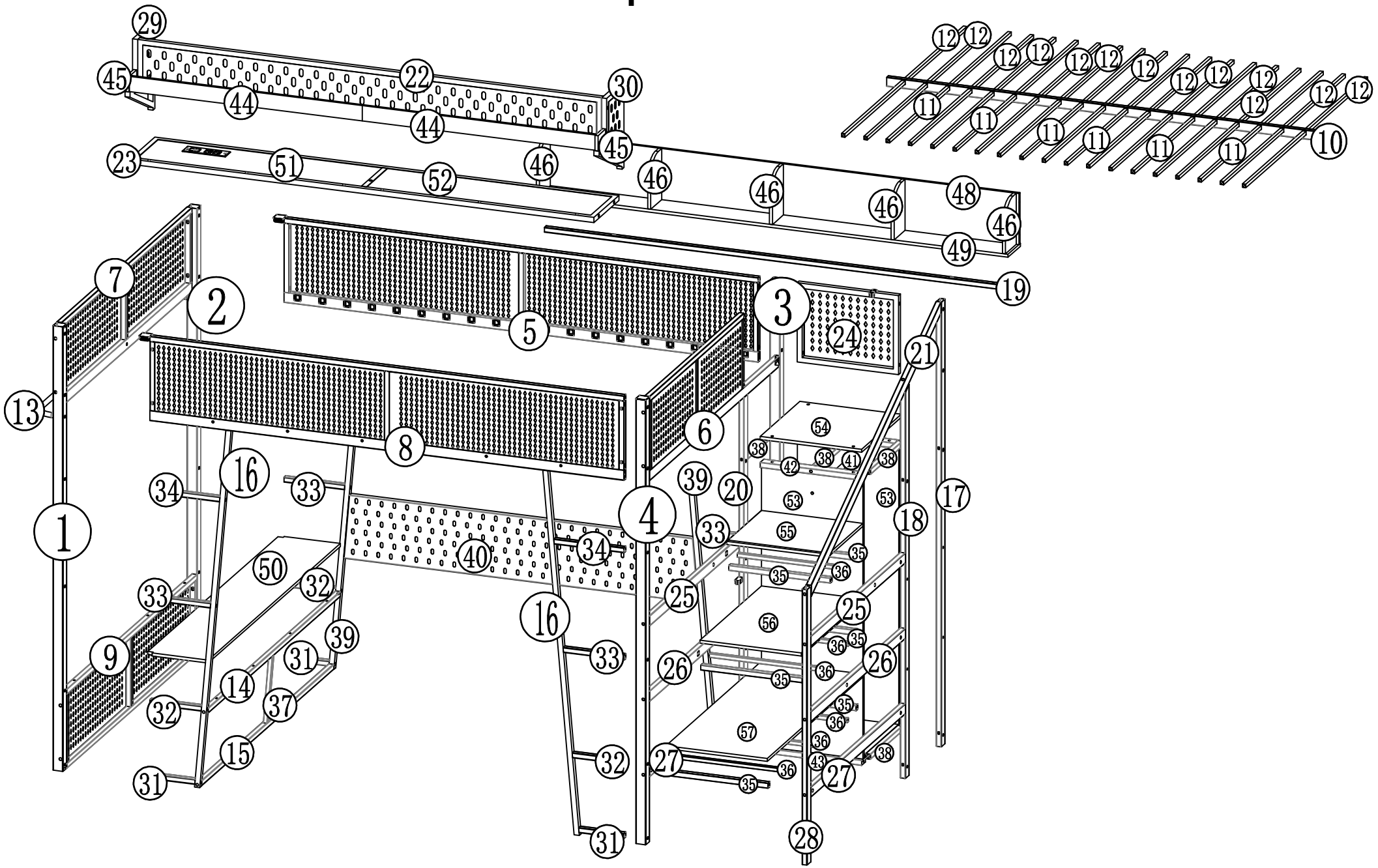

Part List

 1-1pcs	 2-1pcs	 3-1pcs	 4-1pcs	 5-1pcs	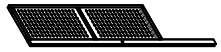 6-1pcs	 7-1pcs
 8-1pcs	 9-1pcs	10-1pcs	11-6pcs	12-13pcs	 13-1pcs	14-1pcs
15-1pcs	 16-2pcs	 17-1pcs	18-1pcs	19-1pcs	20-1pcs	21-1pcs
 22-1pcs	 23-1pcs	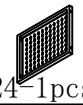 24-1pcs	25-2pcs	 26-2pcs	 27-2pcs	28-1pcs
 29-1pcs	 30-1pcs	 31-4pcs	 32-4pcs	 33-4pcs	 34-2pcs	 35-6pcs
 36-6pcs	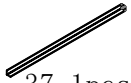 37-1pcs	 38-5pcs	 39-2pcs	 40-1pcs	41-1pcs	42-2pcs
43-2pcs	44-2pcs	45-2pcs	46-5pcs	47-1pcs	48-1pcs	49-1pcs
50-1pcs	51-1pcs	52-1pcs	53-2pcs	54-1pcs	55-1pcs	56-1pcs
						57-1pcs

Hardware List

P Socket 1pcs	Z 8*75-2PCS	R 4*25-22PCS	B 8*15 8PCS	C 8*35 59PCS	D 8*55 59PCS	E 6*30 12PCS	F 8*15-33PCS	G 4*35-18PCS	O	M	K 38PCS	U 2PCS
Q Light strips 1pcs		X M4-2PCS						H 4*50-18PCS		L=4MM L=5MM		T 4PCS

Step 1

Attention

Be sure not to install No. 16 in the wrong direction.

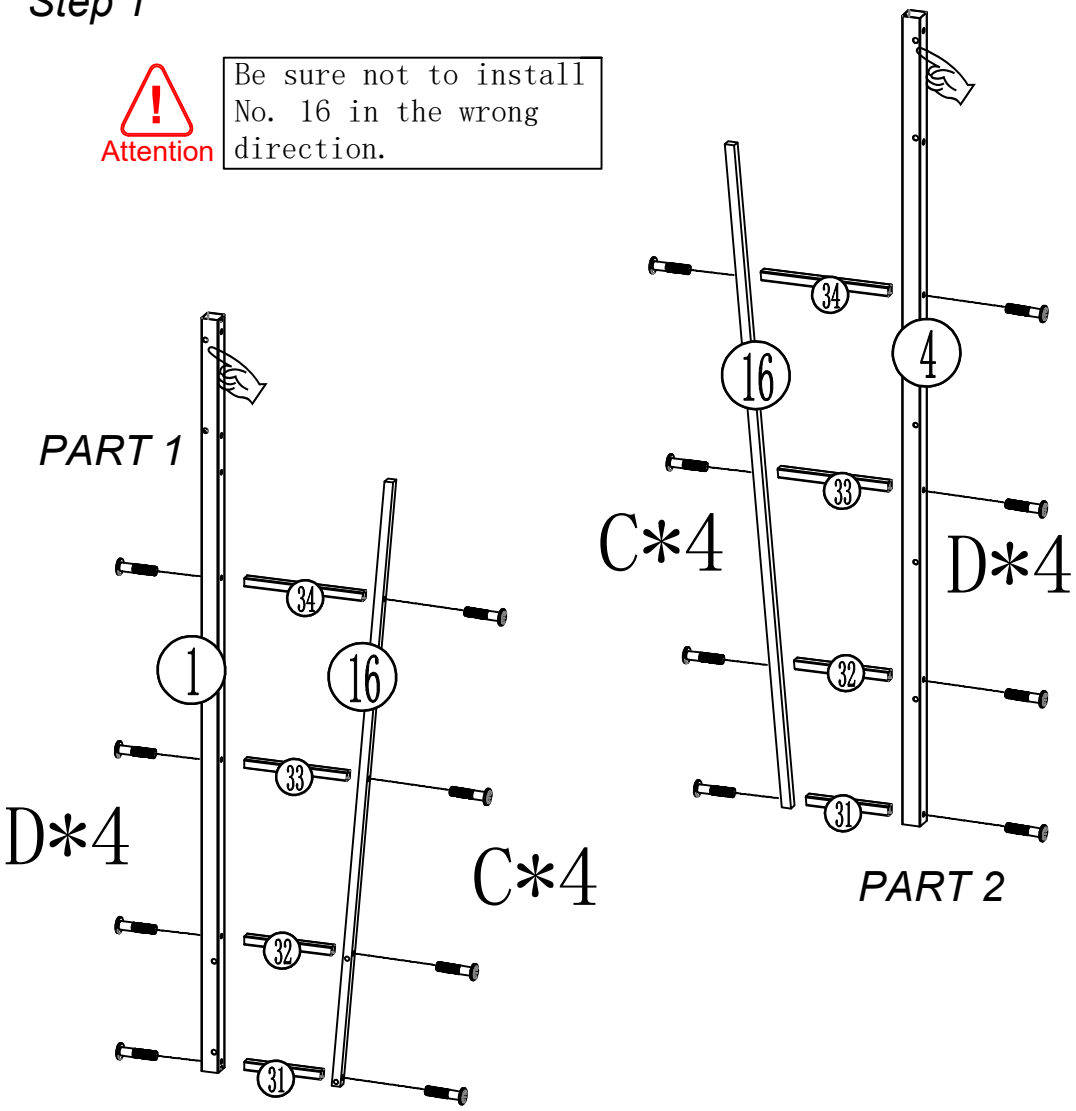

D 8*55-8PCS	C 8*35-8PCS	L

Step 2

Attention

Be sure not to install No. 39 in the wrong direction.

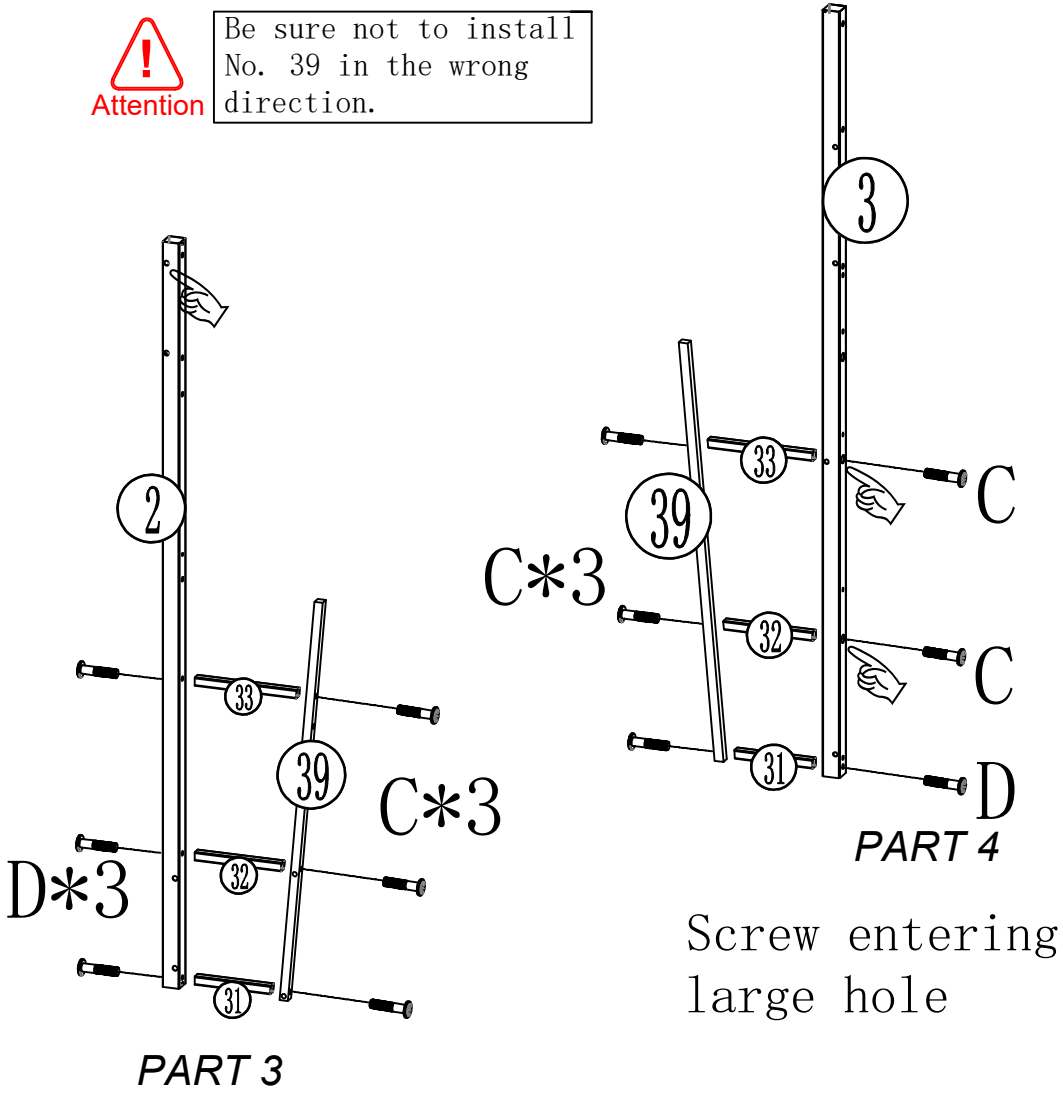

D 8*55-4PCS	C 8*35-8PCS	L

Step 3

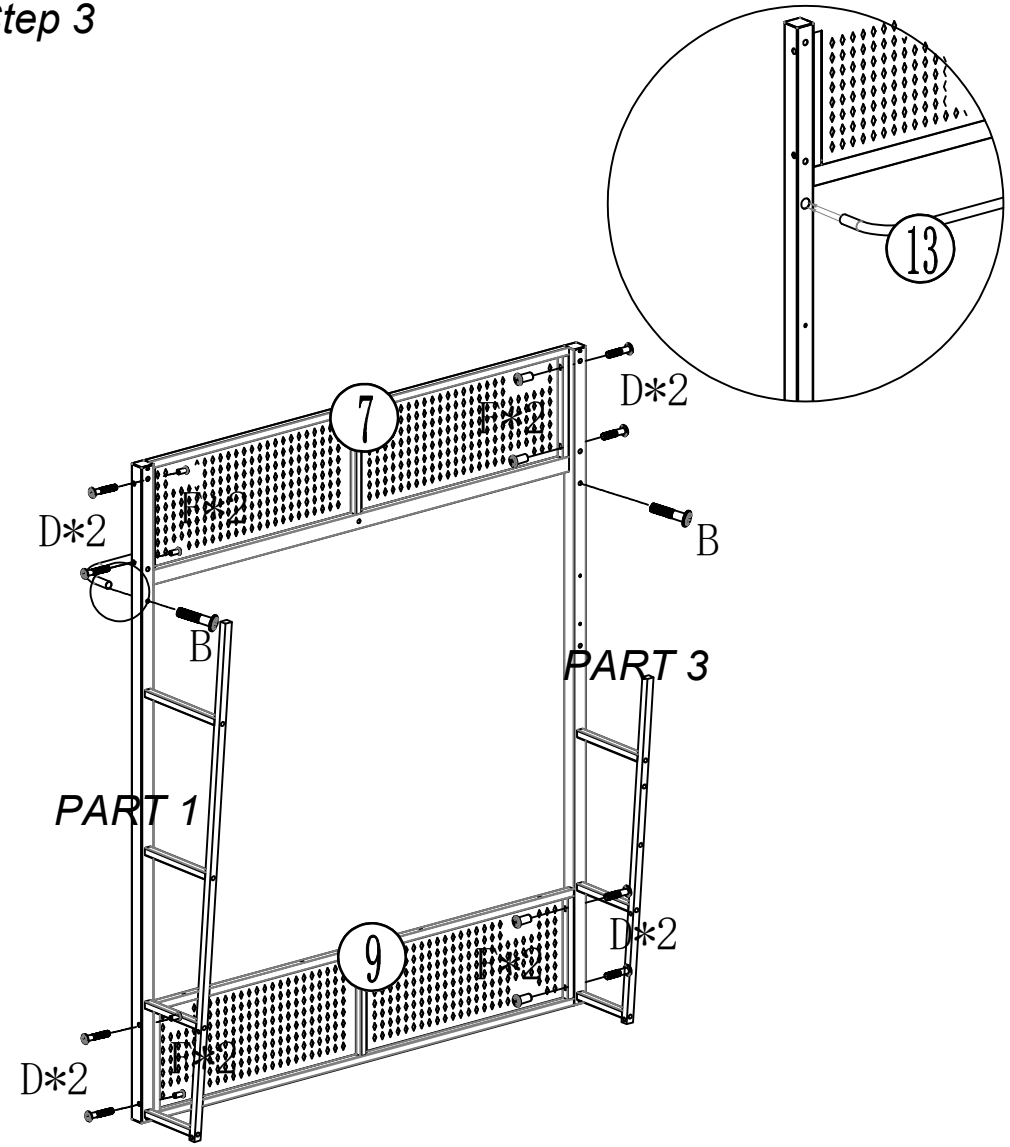

Step 4

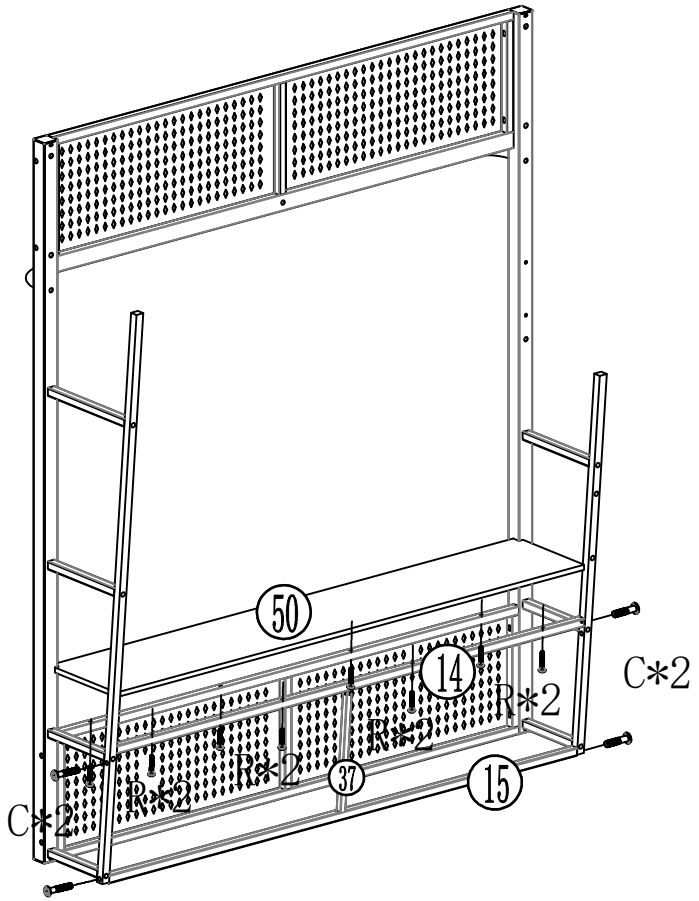

Attention

Insert number 37 into the square holes numbered 14 and 15.

D 8*55-8PCS	F 8*18-8PCS	B 8*15-2PCS	L

C 8*35-4PCS	R 4*25-8PCS	L	M

Step 5

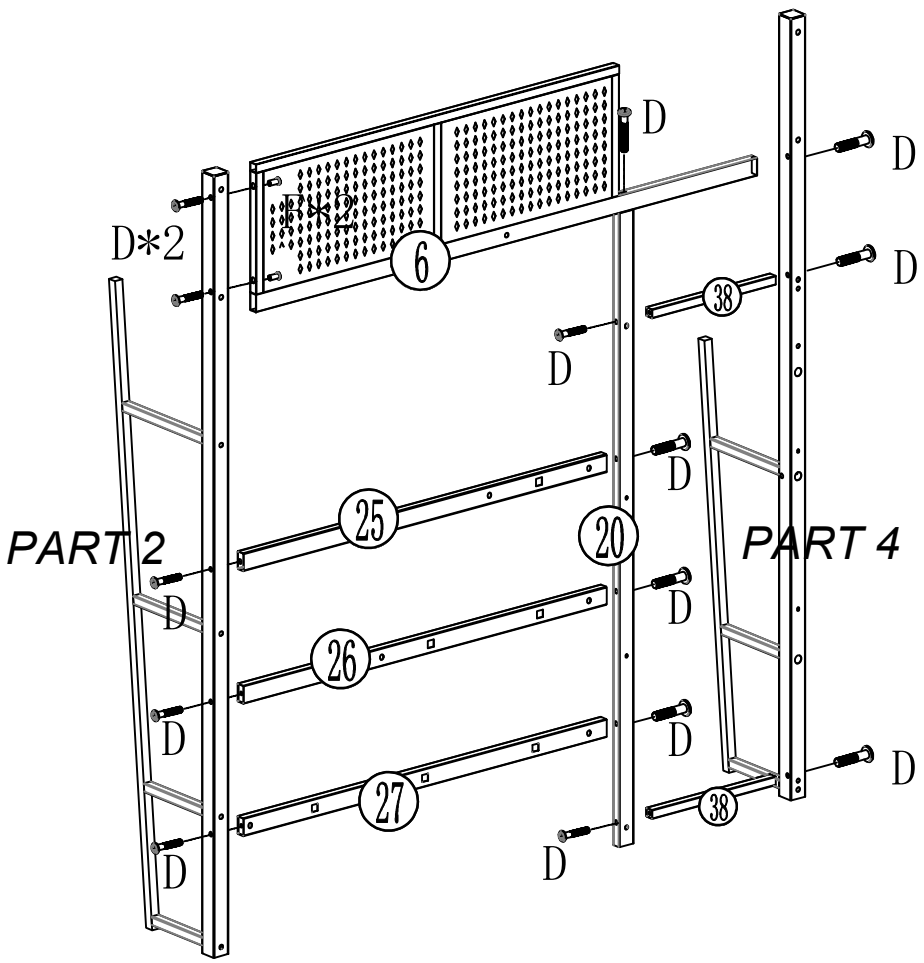



D
8*55-14PCS



F
8*18-2PCS



L

Step 6

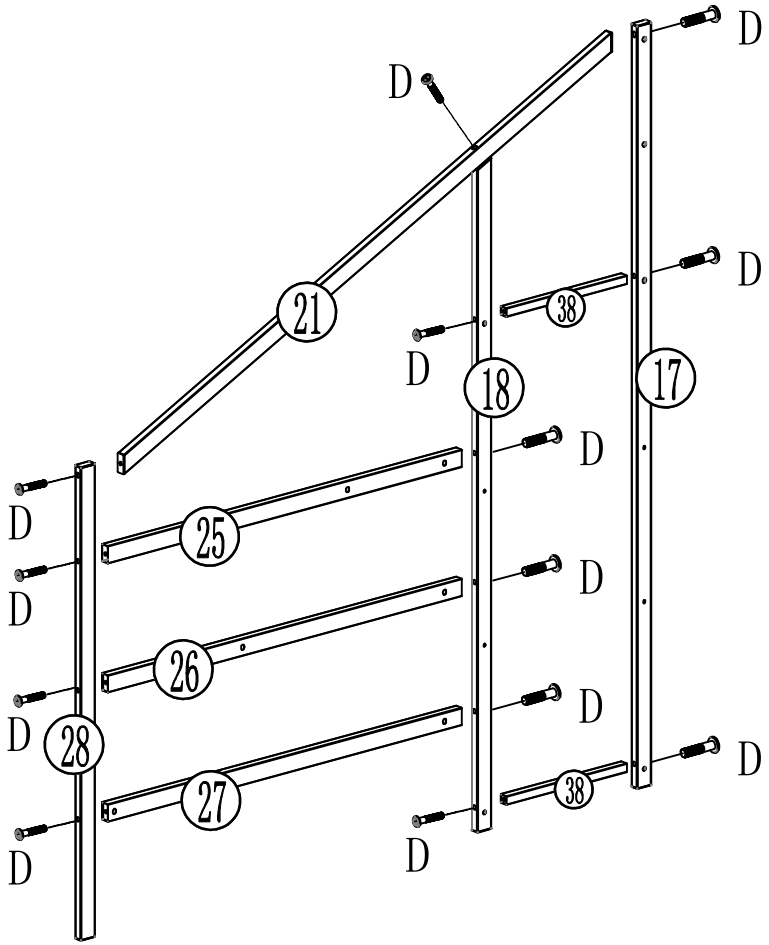



D
8*55-13PCS



L

Step 7

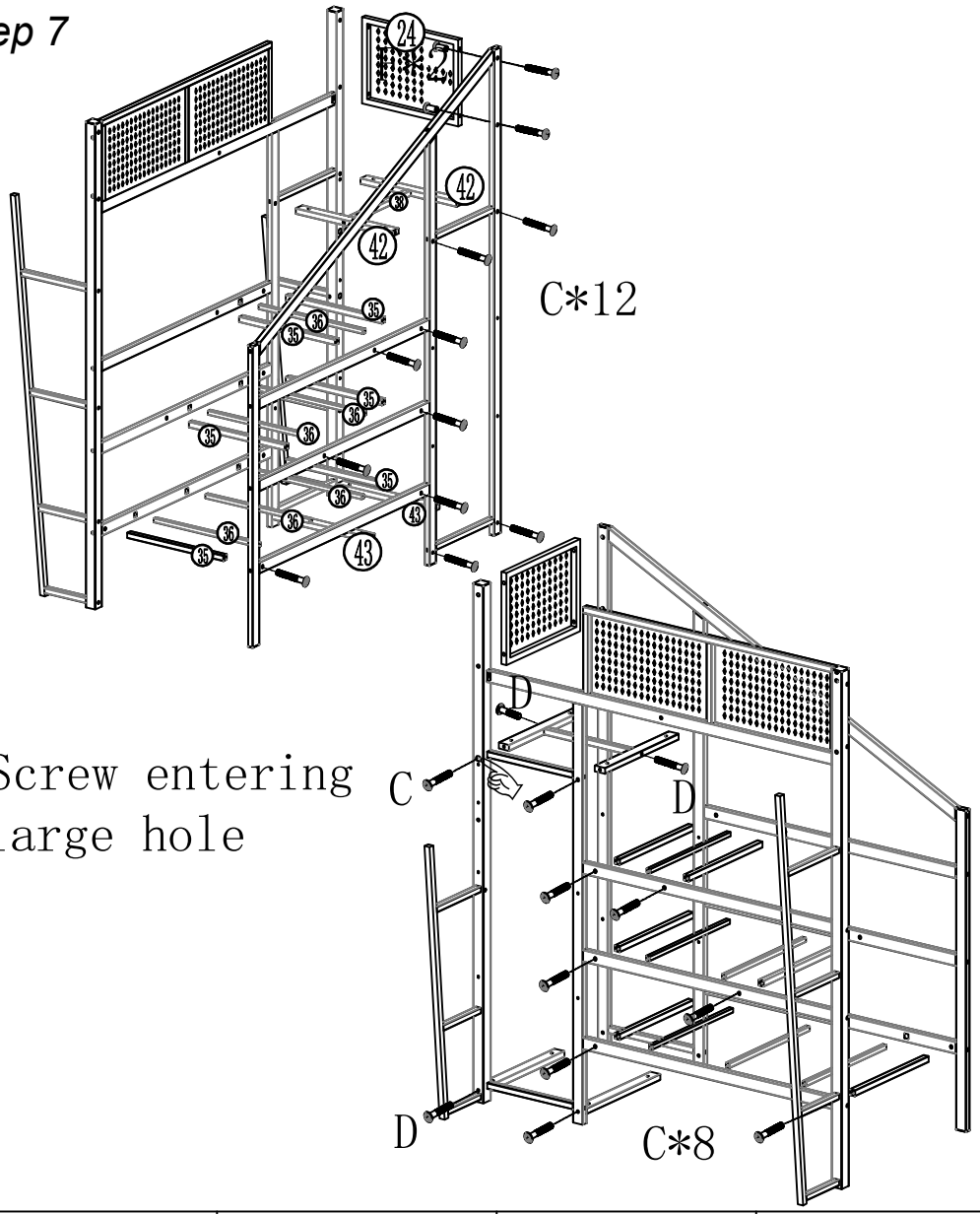

Step 8

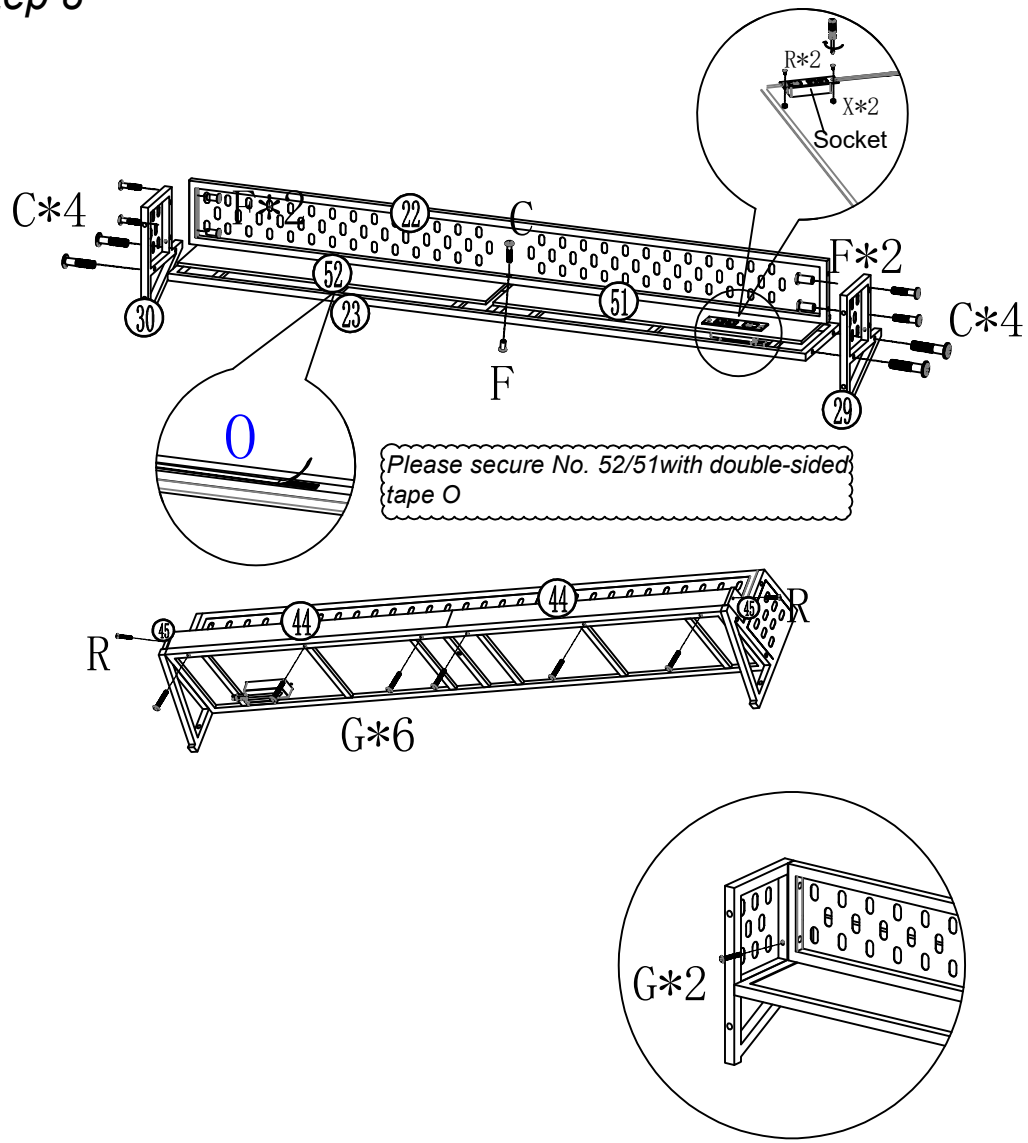

C 8*35-21PCS	D 8*55-3PCS	F 8*18-2PCS	L

C 8*35-9PCS	F 8*18-5PCS	R 4*25-4PCS X M4-2PCS	G 4*35-8PCS	O	M	L

Step 9

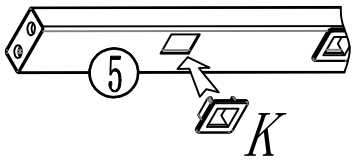

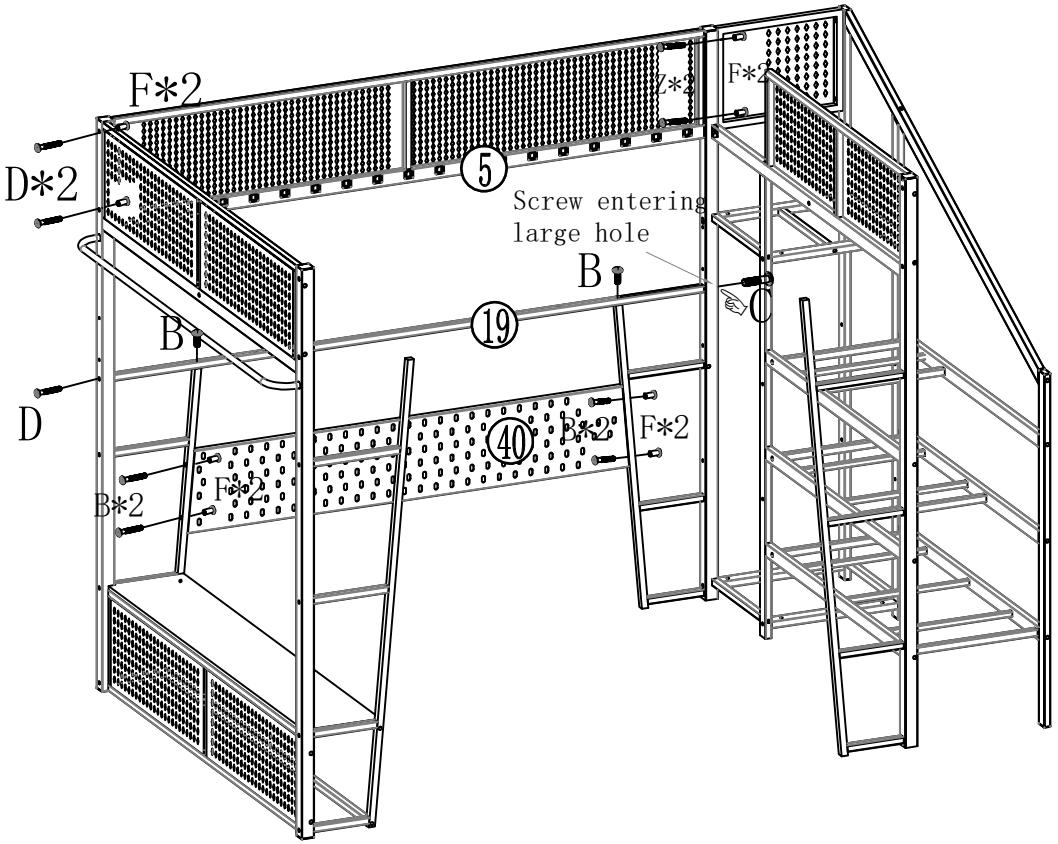

Step 10

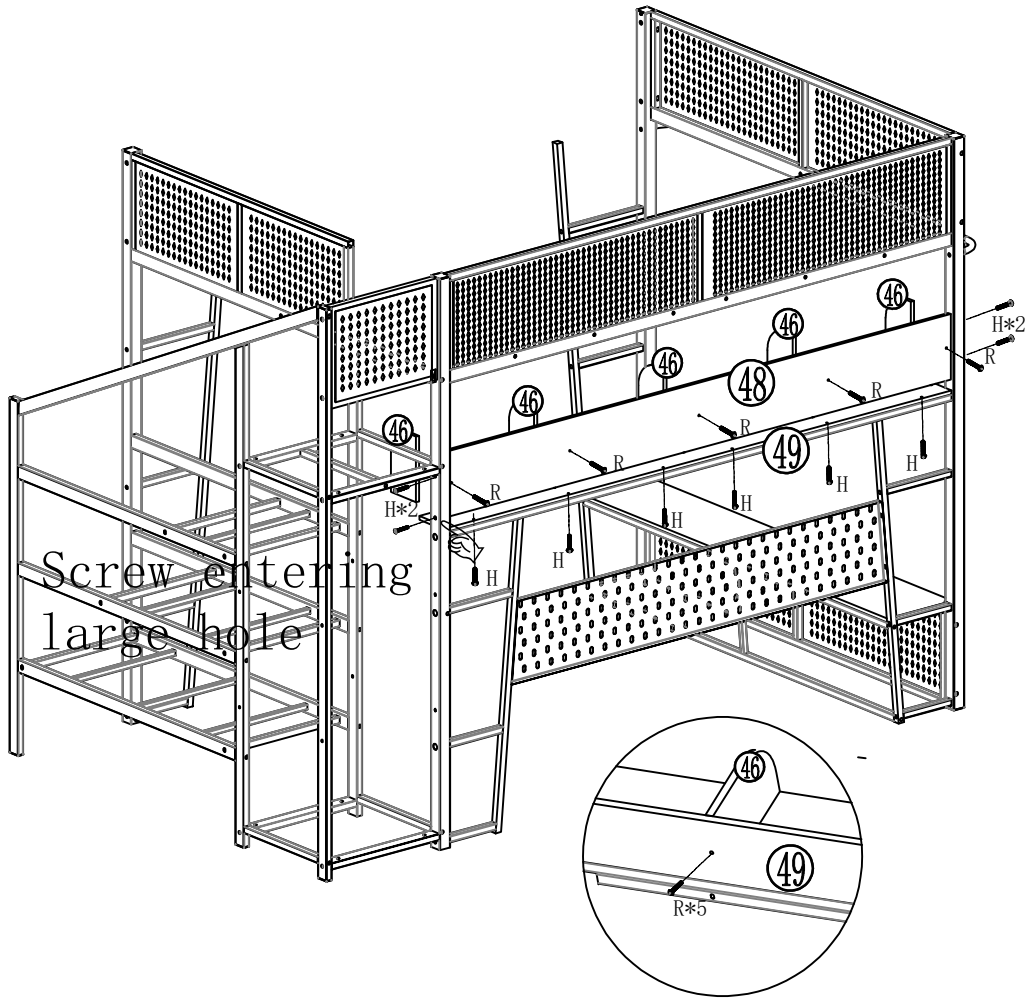

 D 8*55-3PCS	 F 8*18-8PCS	 C 8*35-1PCS	 Z 8*75-2PCS	 B 8*15-6PCS	 L

 R 4*25-10PCS	 H 4*50-10PCS	 M

Step 11

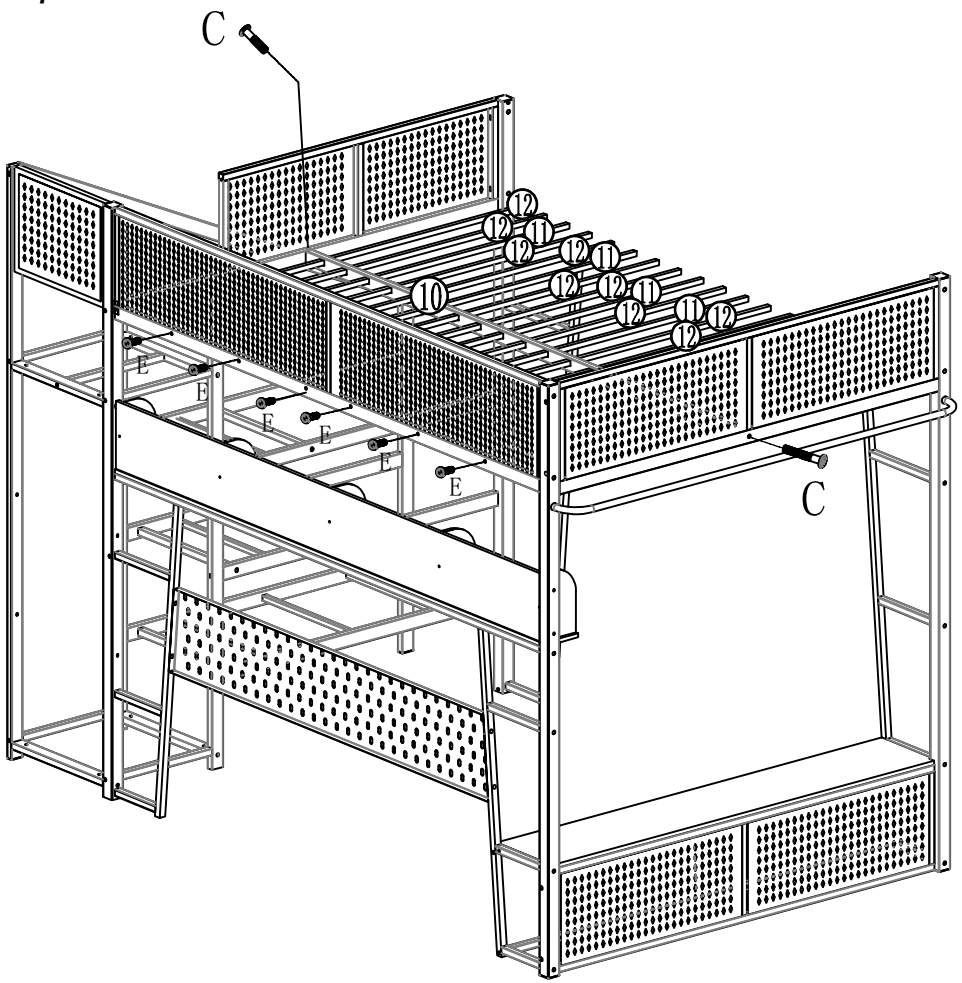

C 8*35-2PCS	E 6*25-6PCS	L

Step 12

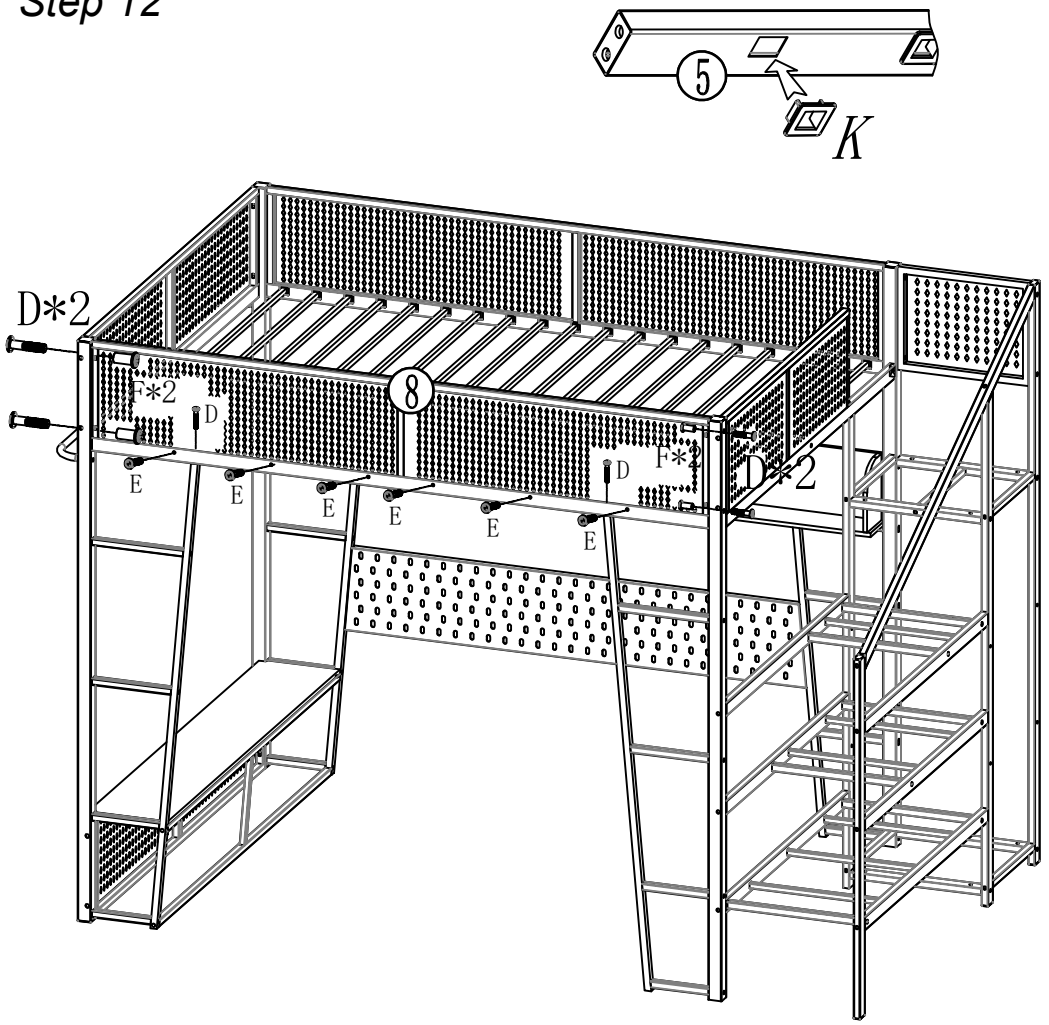

E 6*25-6PCS	D 8*55-6PCS	F 8*18-4PCS	L

Step 13

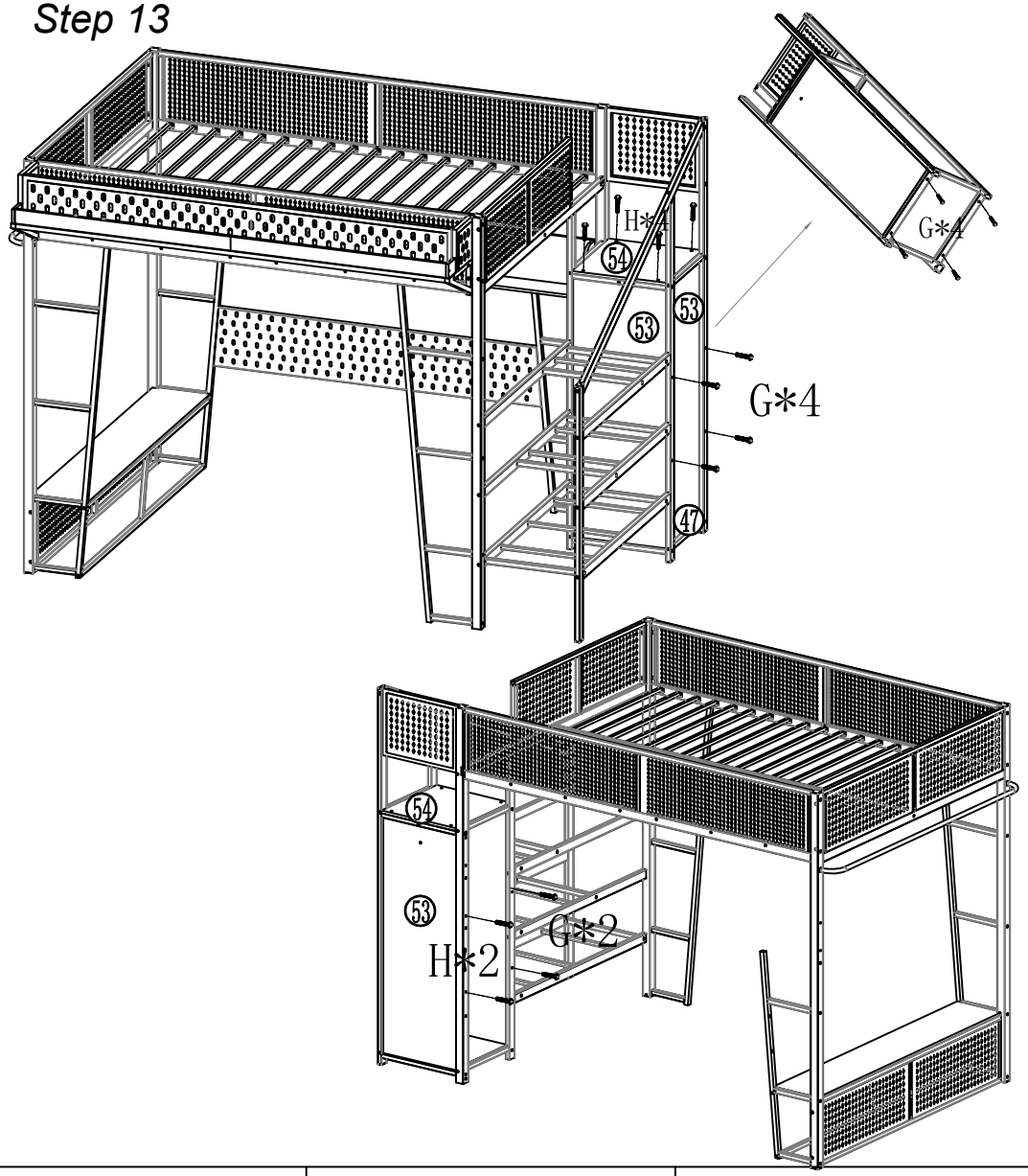

G	H	M
4*35-10PCS	4*50-6PCS	

Step 14

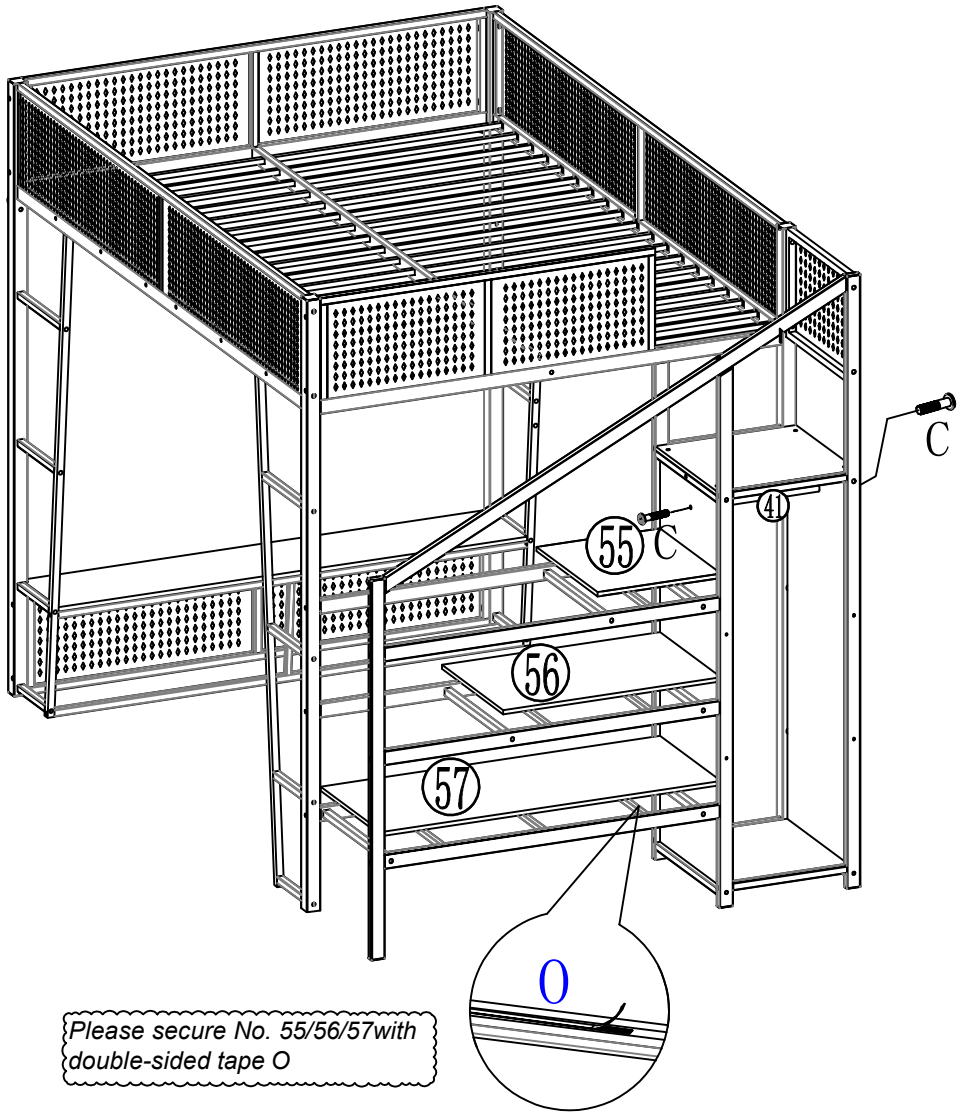

Please secure No. 55/56/57with double-sided tape O

O	C	L
O	8*35-2PCS	

Step15

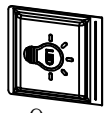

Q
Light strips
1pcs

The light strip is attached to the inner side of component No. 5.

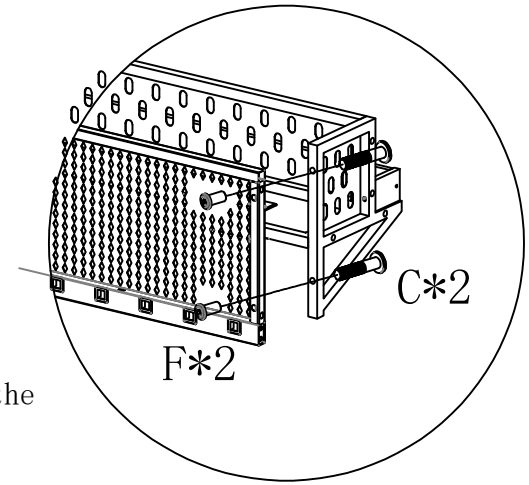

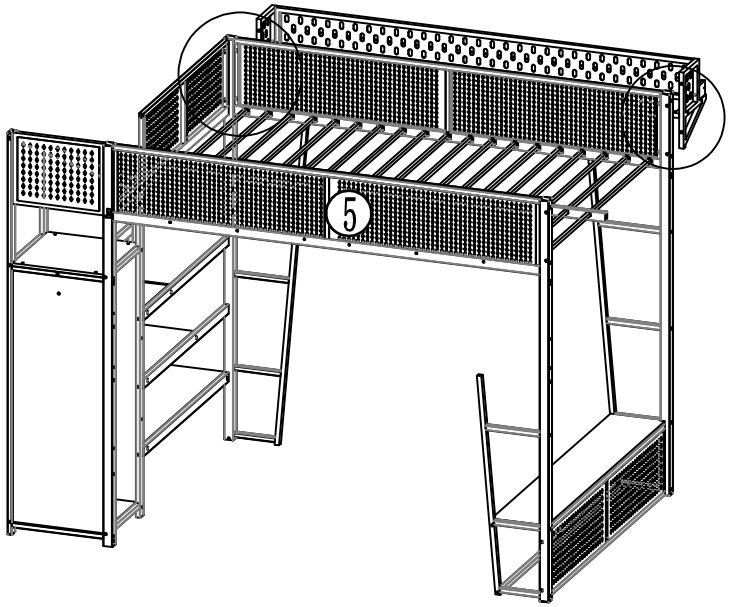

 F 8*18-4PCS	 C 8*35-4PCS	 L	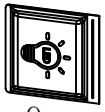 Q Light strips 1pcs

Completed loft bed

Tips:
If you feel that the bed is a little wobbly then please use the parts "U" and "T"for reinforcement

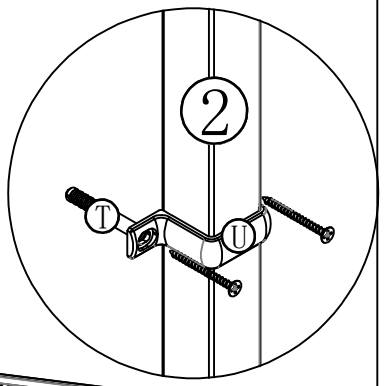

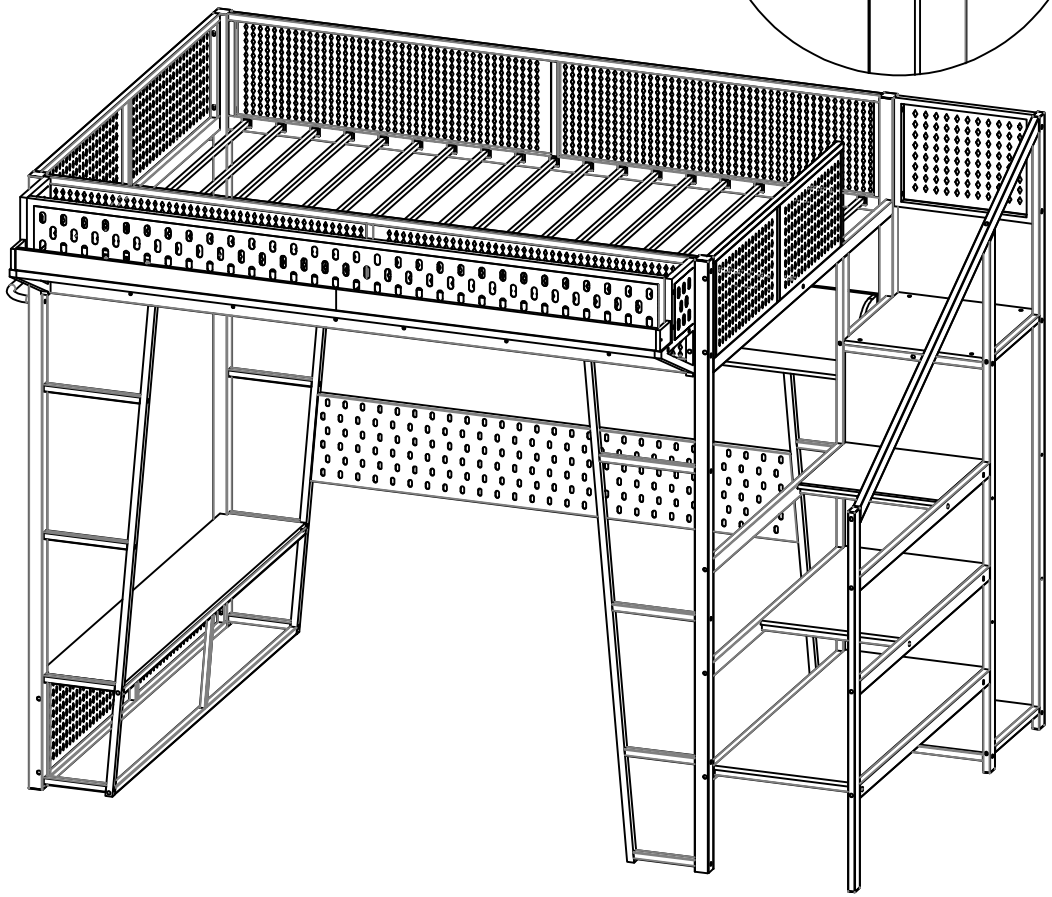

Attention

Please make sure all bolts are fastened before use, thank you.