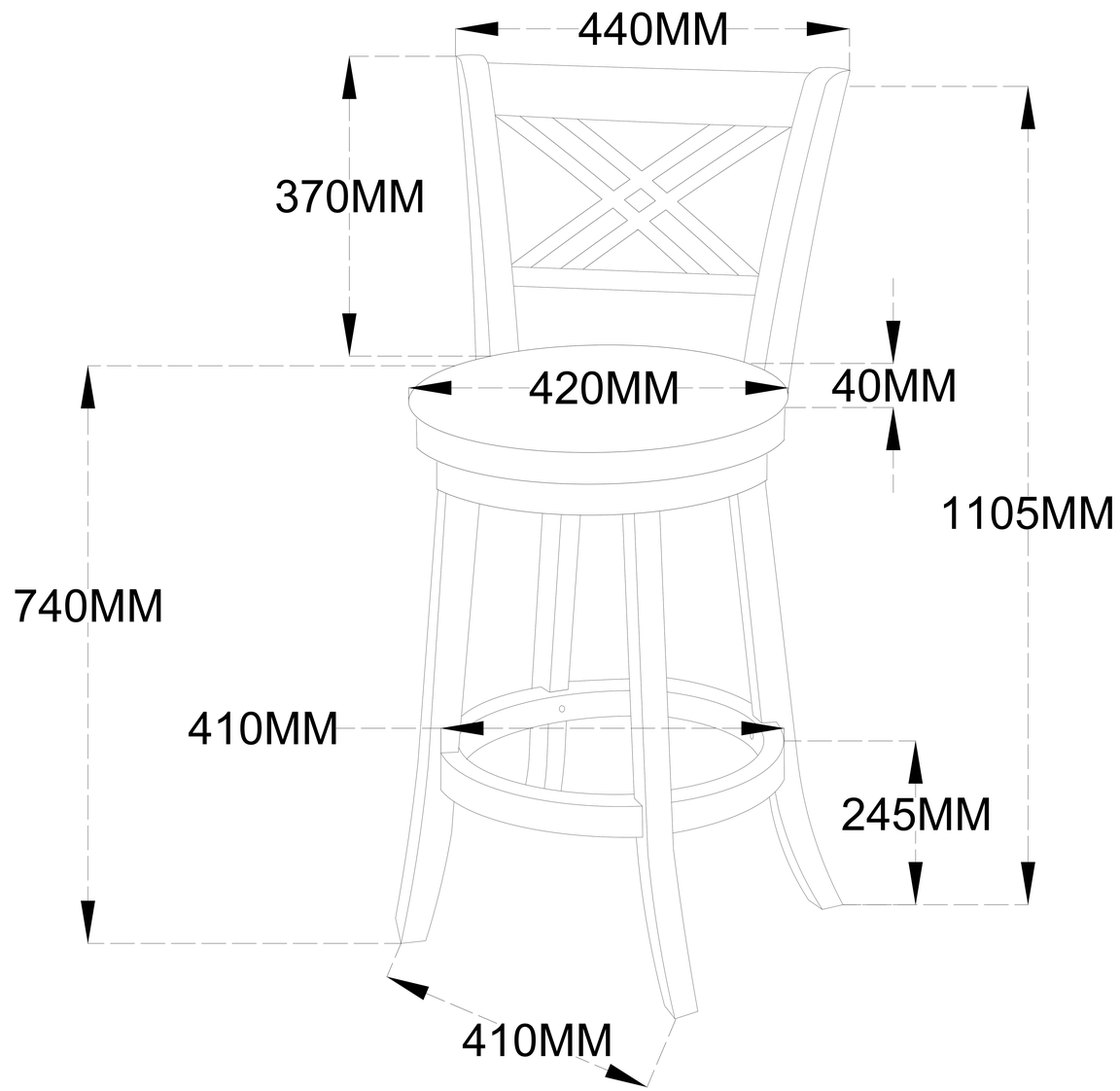MODEL: GYM12439