ASSEMBLY INSTRUCTION

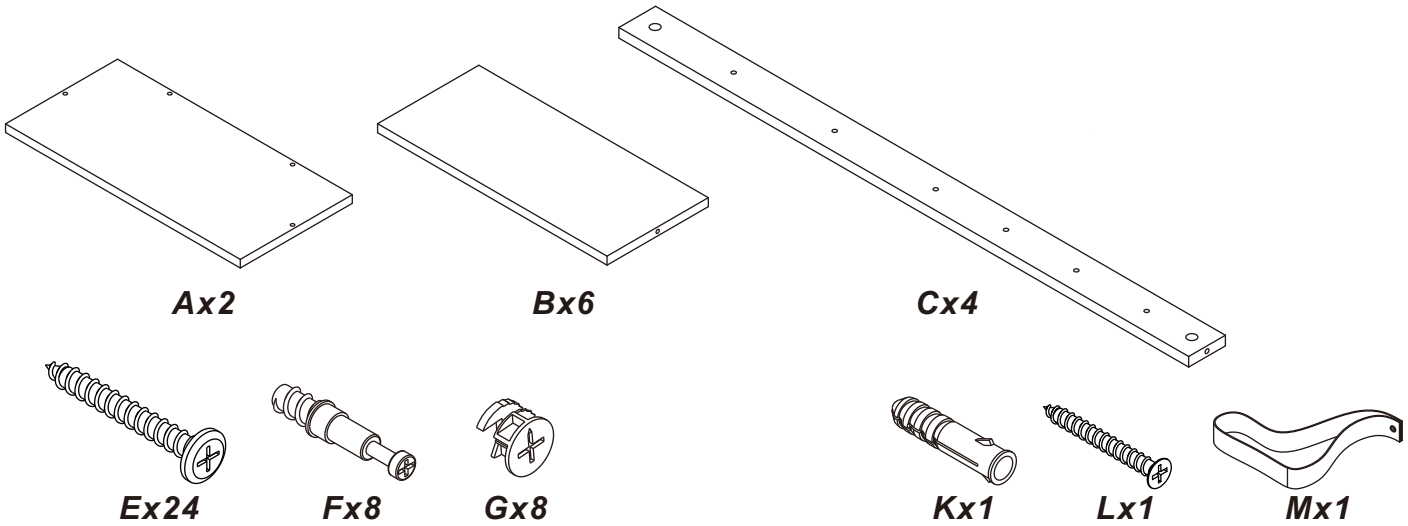

1

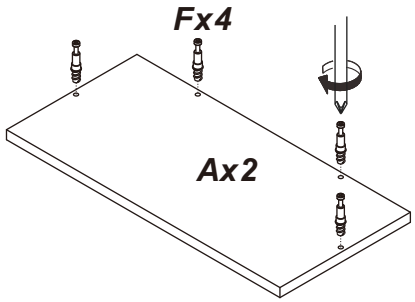

2

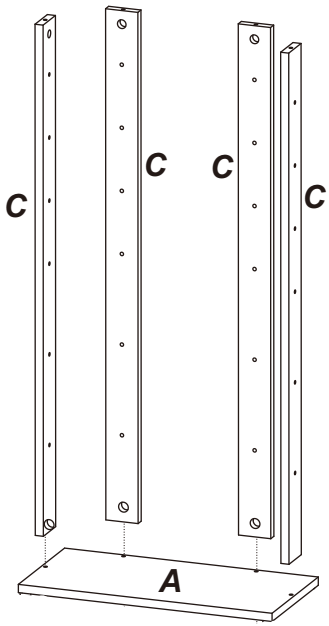

3

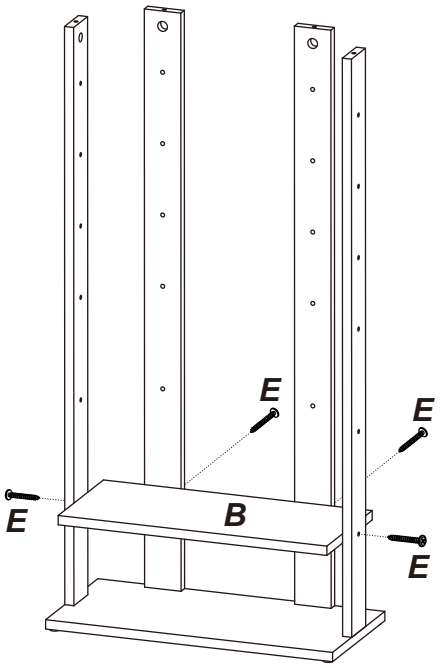

4

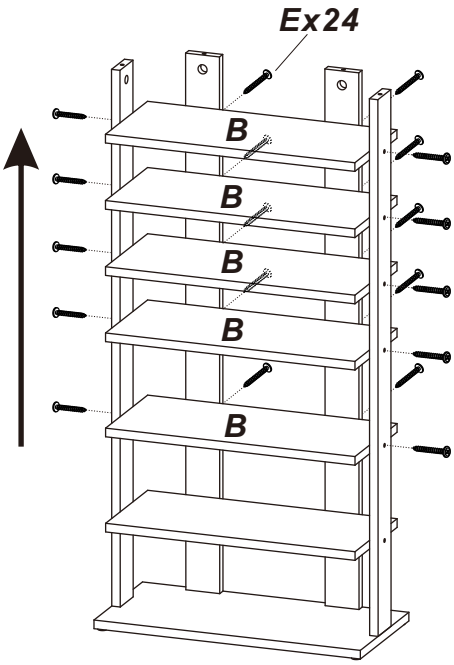

5

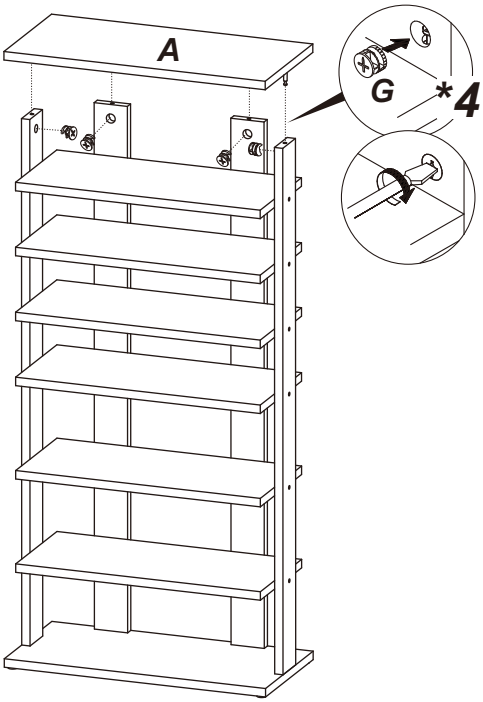
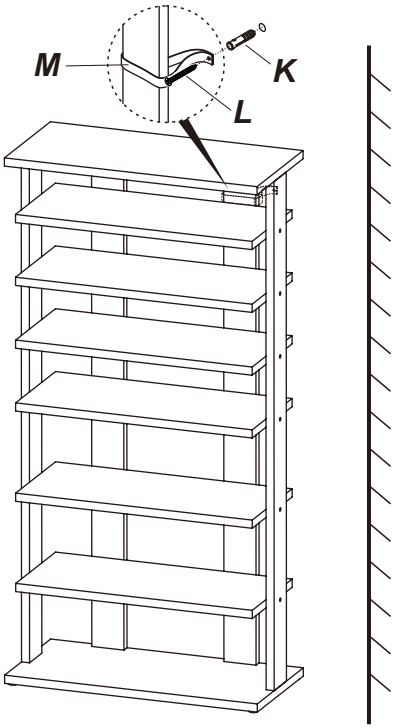
6