Large Dog Kennel

Product ID. 7AYDM

Scan for Support
support@garvee.com

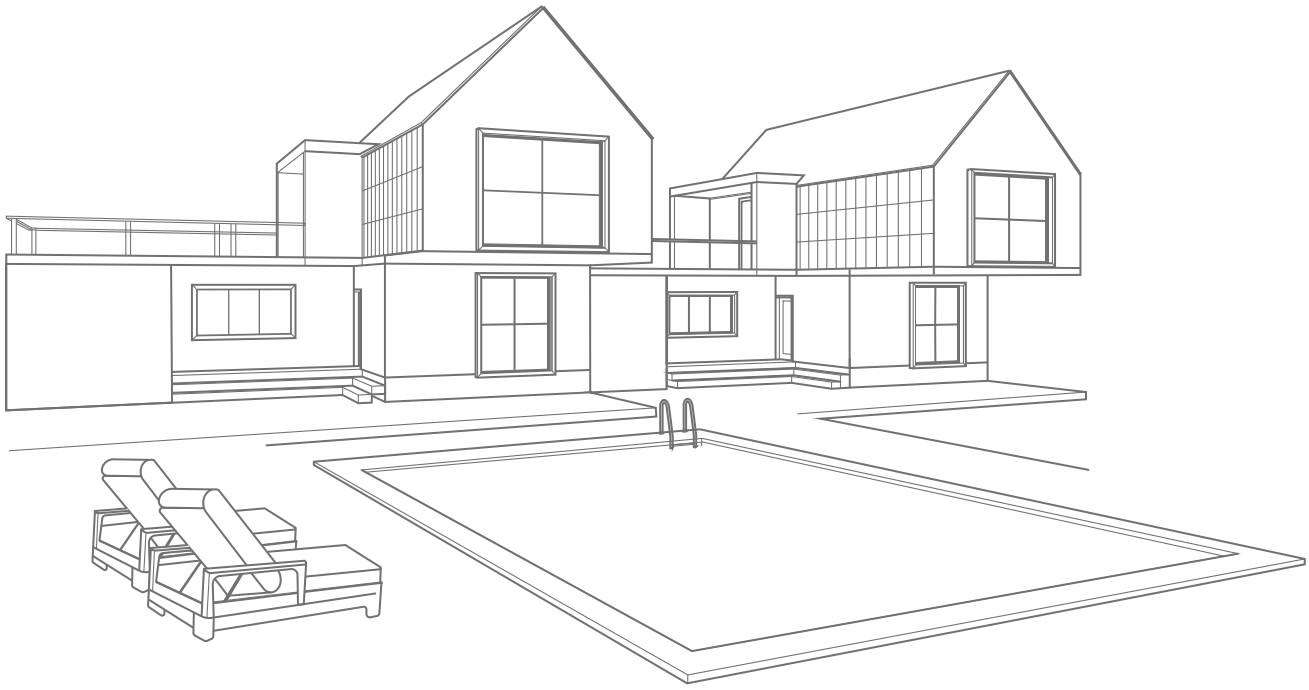

Distributed by
GARVEE.com

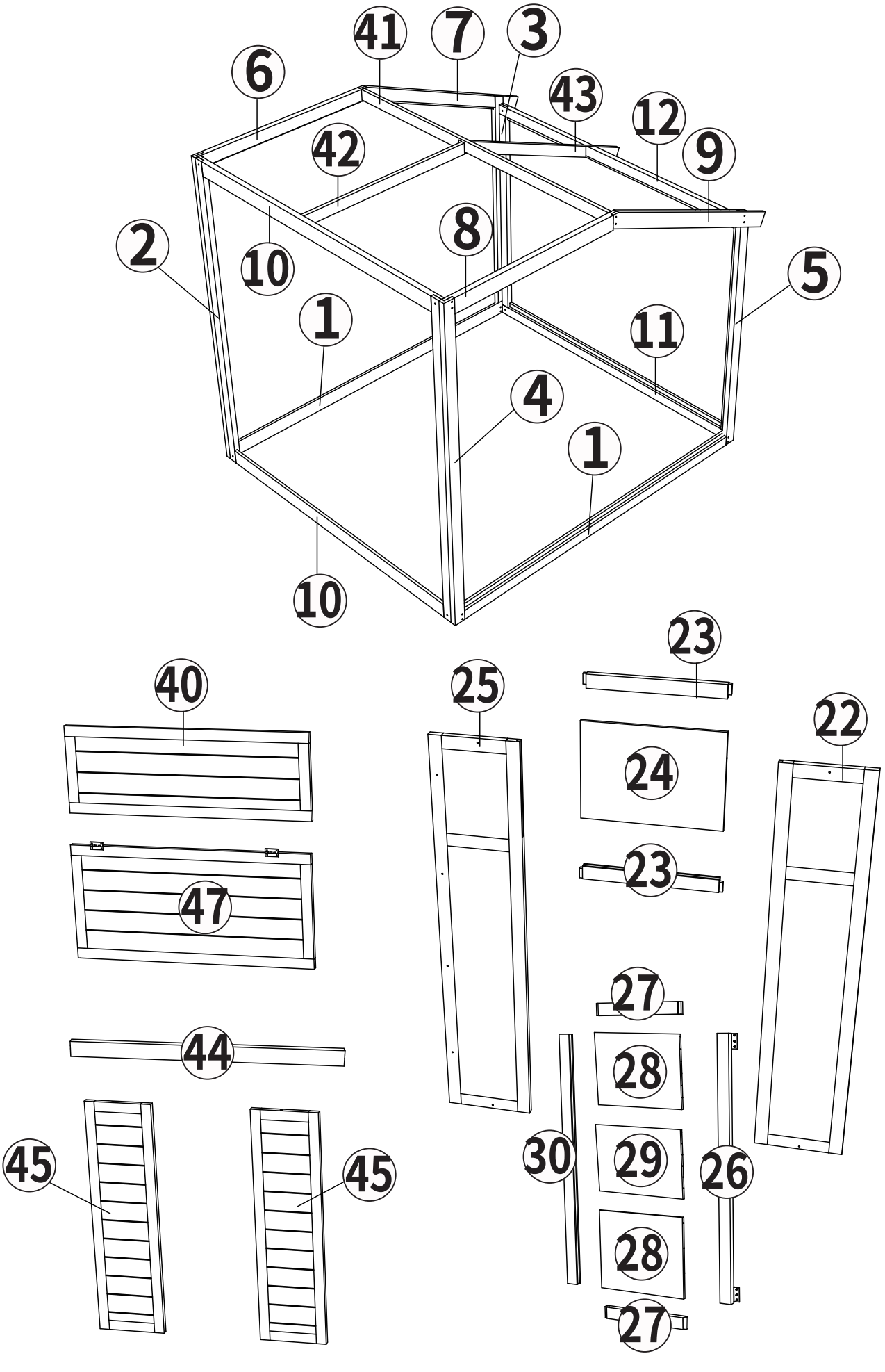
41
7
3
6
43
12
42
9
8
2
10
5
1
11
4
1
10
23
40
25
22
24
23
47
27
44
28
30
29
26
28
45
45
27

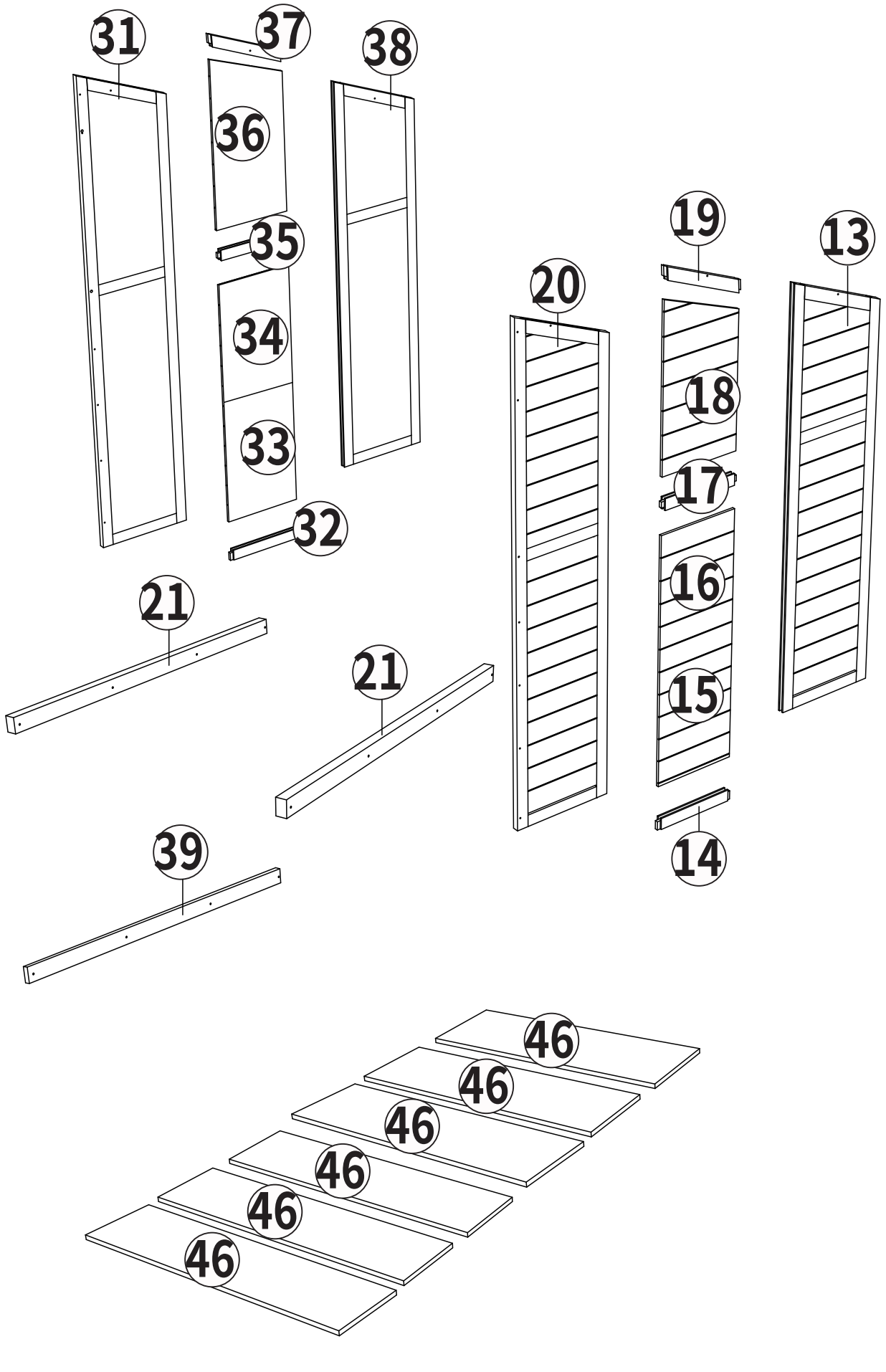
31
37
38
36
35
34
33
32
19
13
20
18
17
16
15
14
21
21
39
46
46
46
46
46
46

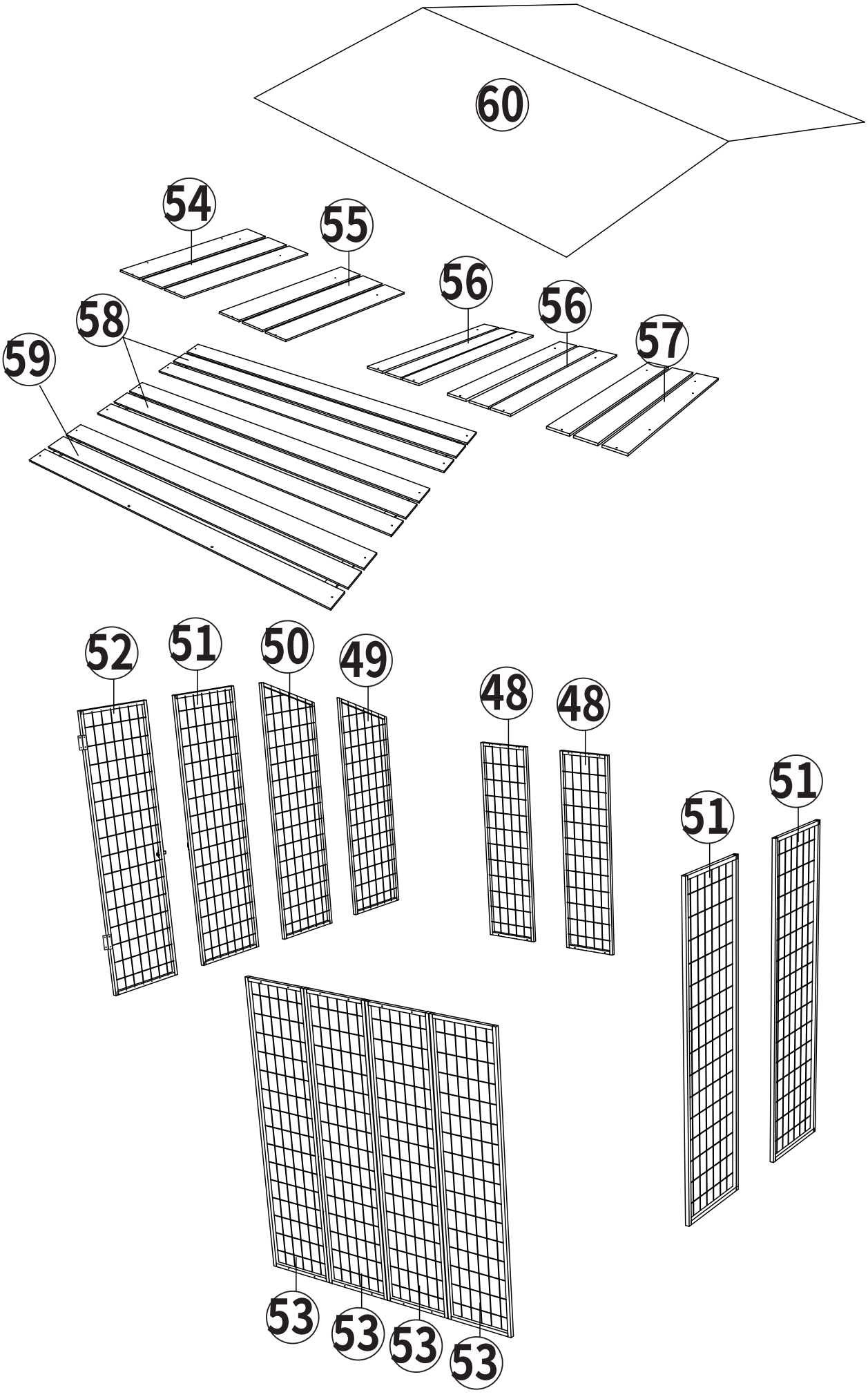
60
54
55
56
56
57
58
59
52
51
50
49
48
48
51
51
53
53
53
53

1 x2



2 x1



3 x1



4 x1



5 x1



6 x1



7 x1



8 x1



9 x1



10 x2



11 x1



12 x1

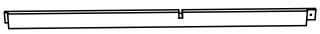

13 x1

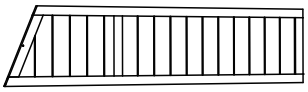

14 x1



15 x1

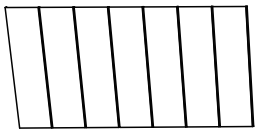

16 x1

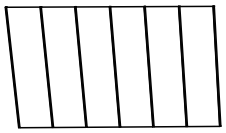

17 x1



18 x1

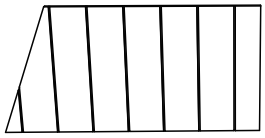

19 x1

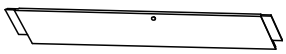

20 x1

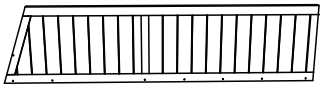

21 x2

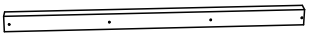

22 x1

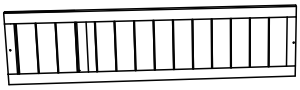

23 x2



24 x1



25 x1

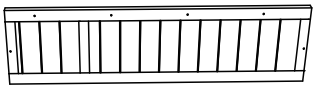

26 x1

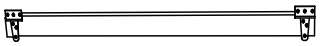

27 x2



28 x2

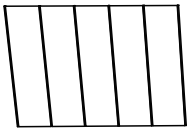

29 x1

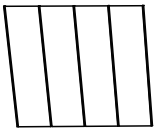

30 x1



31 x1

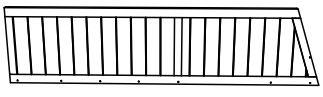

32 x1



33 x1

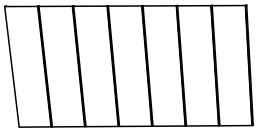

34 x1

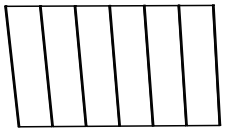

35 x1



36 x1

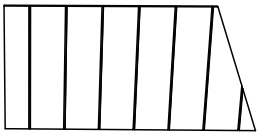

PARTS

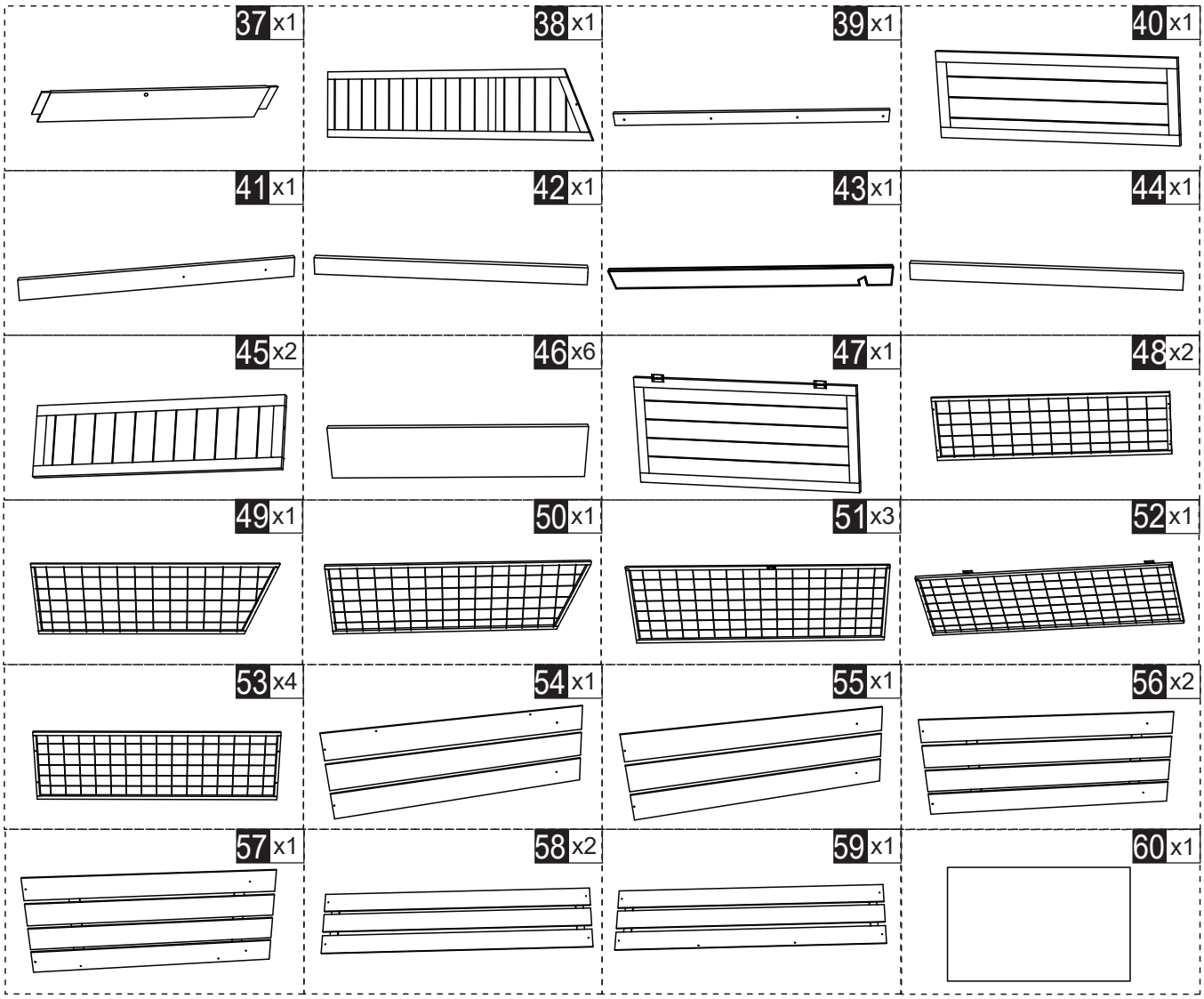

HARDWARE

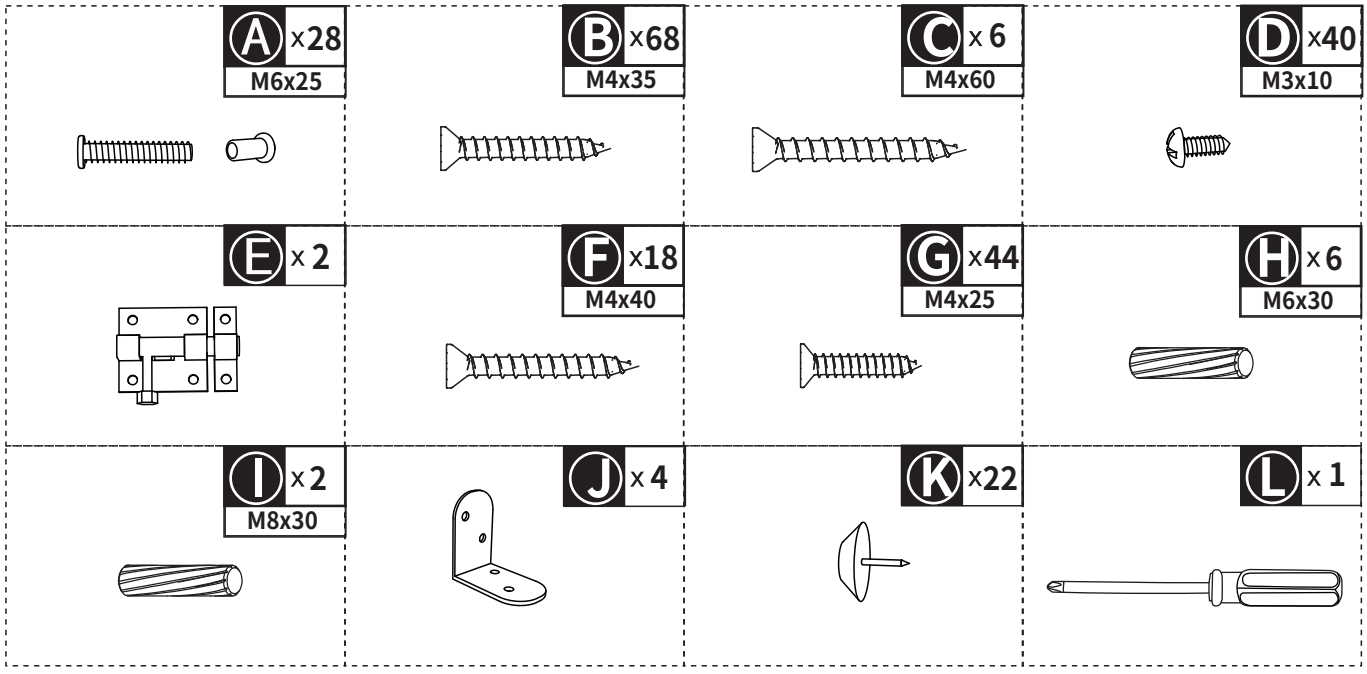

BOX-1/4

NO.	PARTS	QTY
13	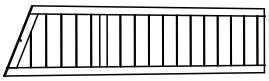	1
20	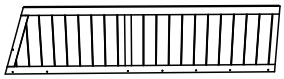	1
22	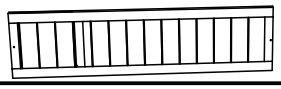	1
25	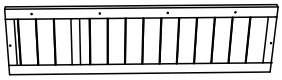	1
26	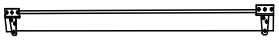	1
27		2
28		2
29	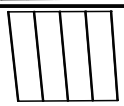	1
30	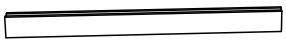	1
42		1
46	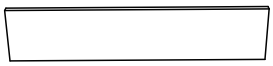	6
48	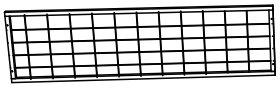	2
49	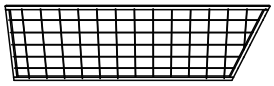	1
50	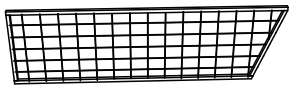	1
51	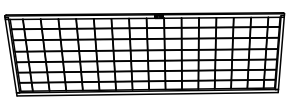	3
52	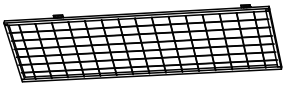	1
53	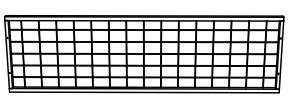	1

BOX-2/4

NO.	PARTS	QTY
2		1
3		1
4		1
5		1
6		1
7		1
8		1
9		1
11	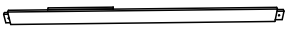	1
15	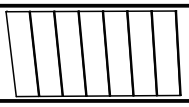	1
16		1
18	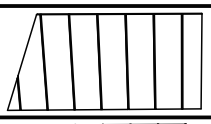	1
33	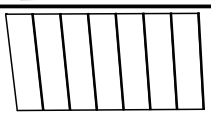	1
34	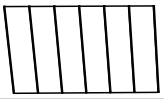	1
36	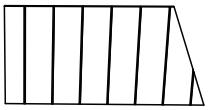	1
53	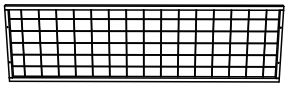	3
60		1

BOX-3/4

NO.	PARTS	QTY
1	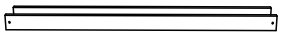	2
10		2
12		1
31	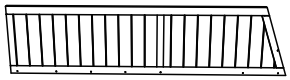	1
38	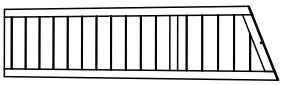	1
41		1
58		2
59		1

BOX-4/4

NO.	PARTS	QTY
14		1
17		1
19	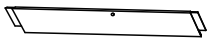	1
21	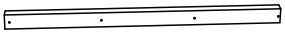	2
23		2
24	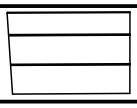	1
32	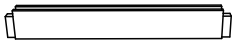	1
35	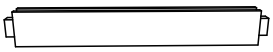	1
37	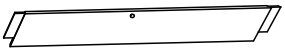	1
39		1
40	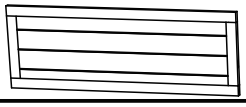	1
43	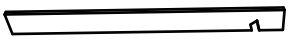	1
44		1
45	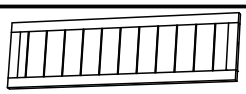	2
47	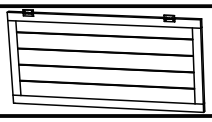	1
54		1
55		1
56		2
57	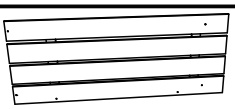	1

01

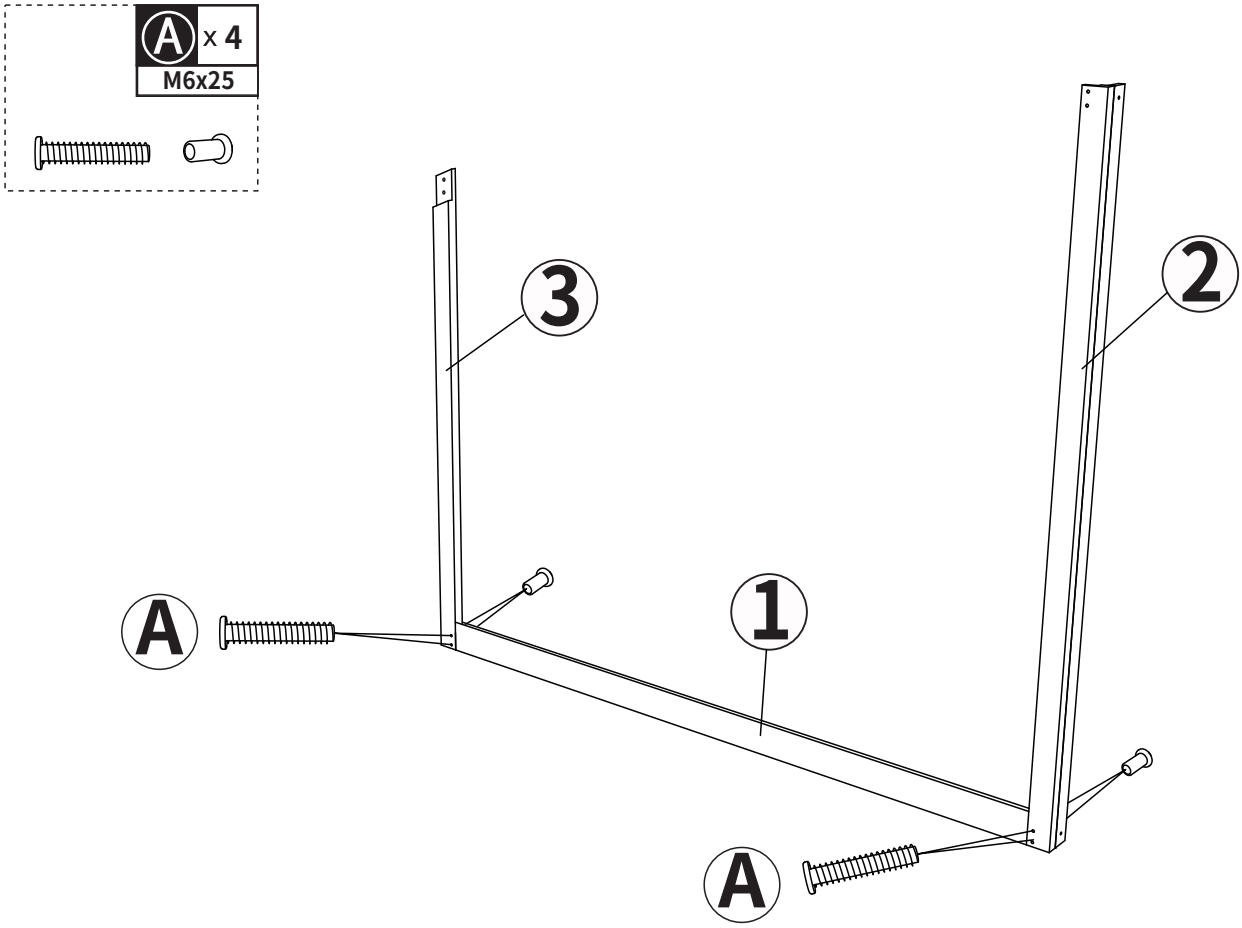

02

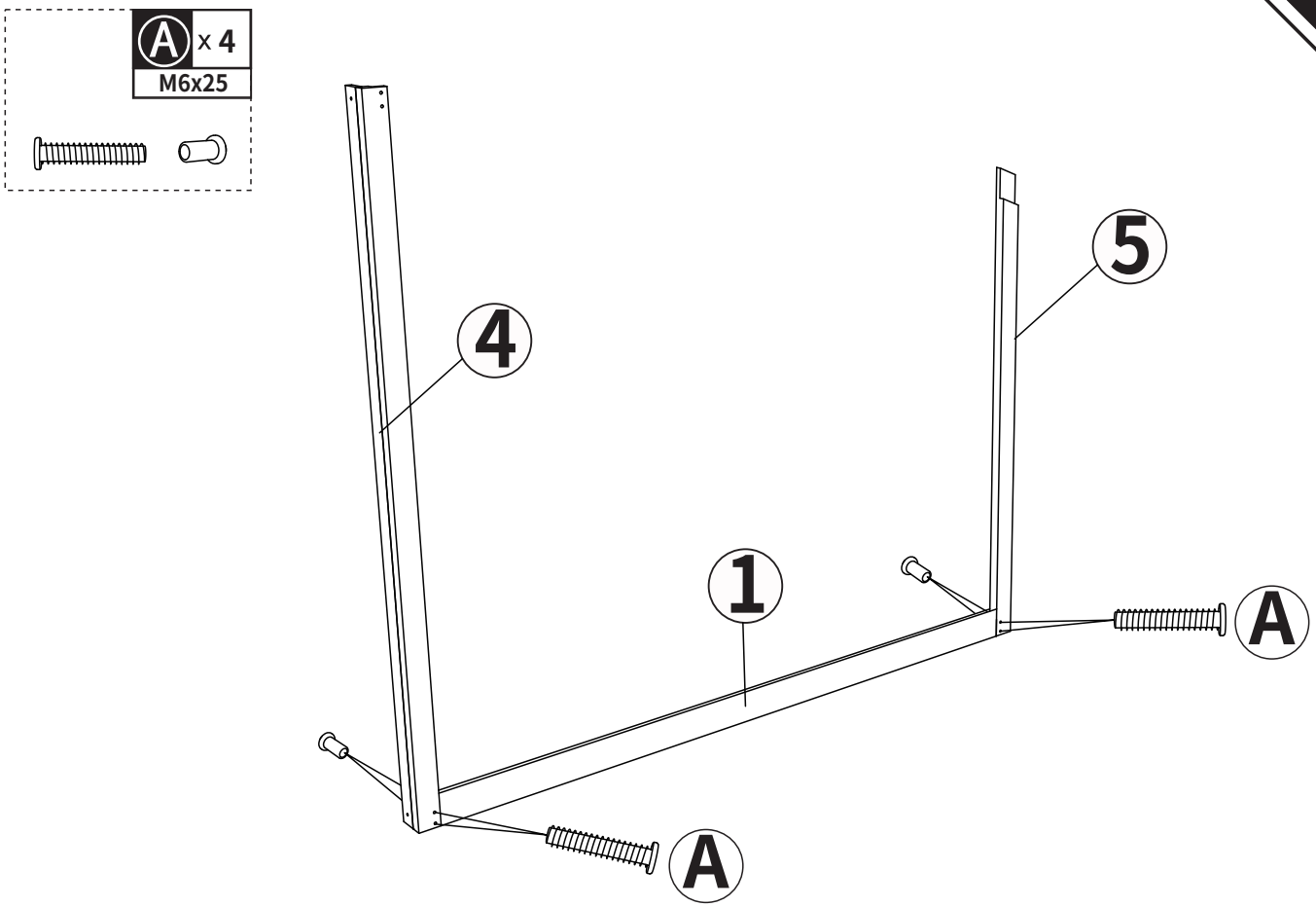

03

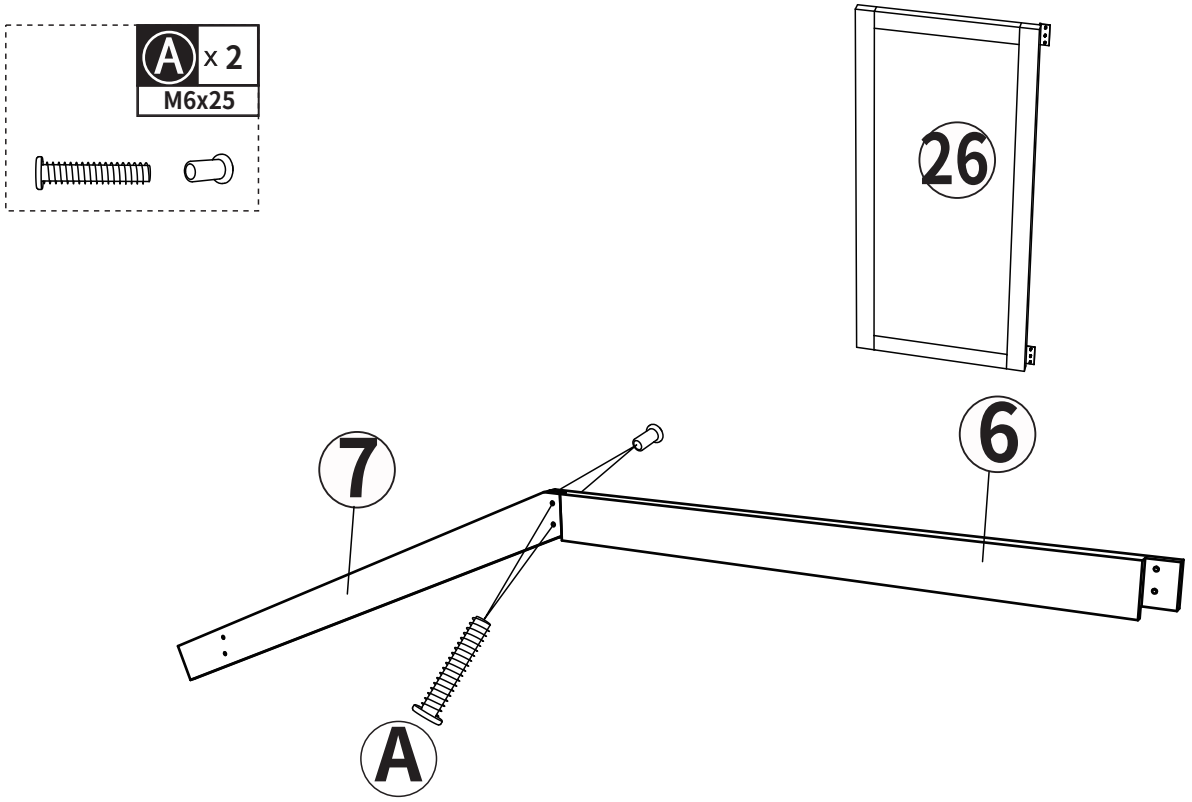

04

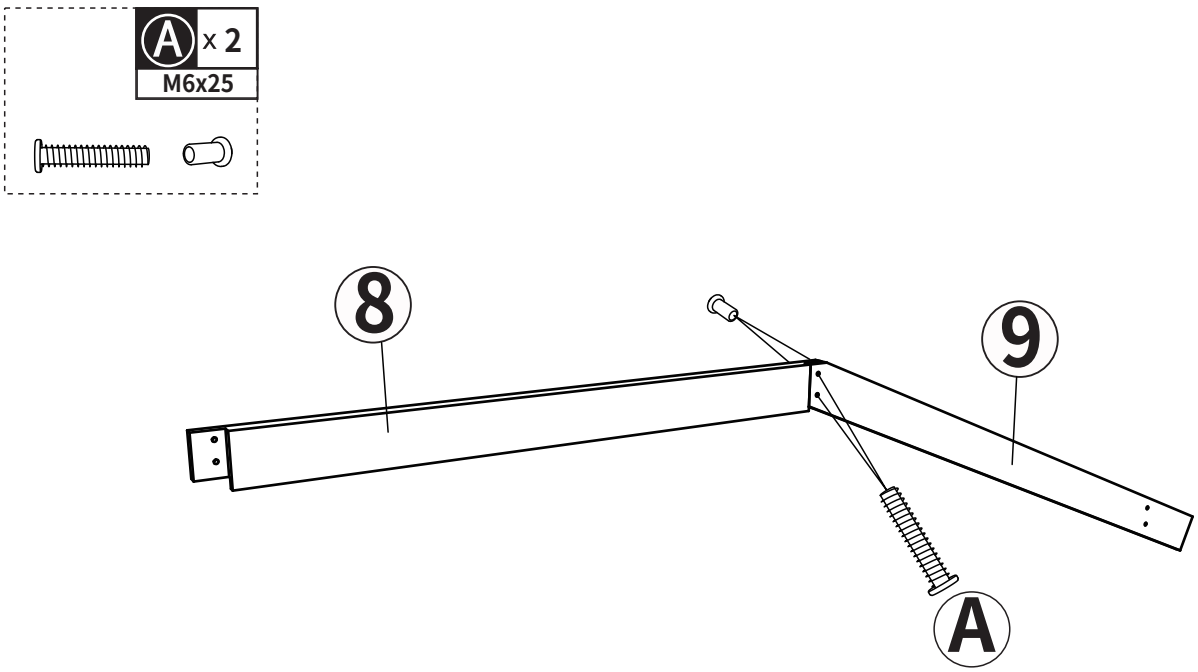

05

Ⓐ x 4
M6x25

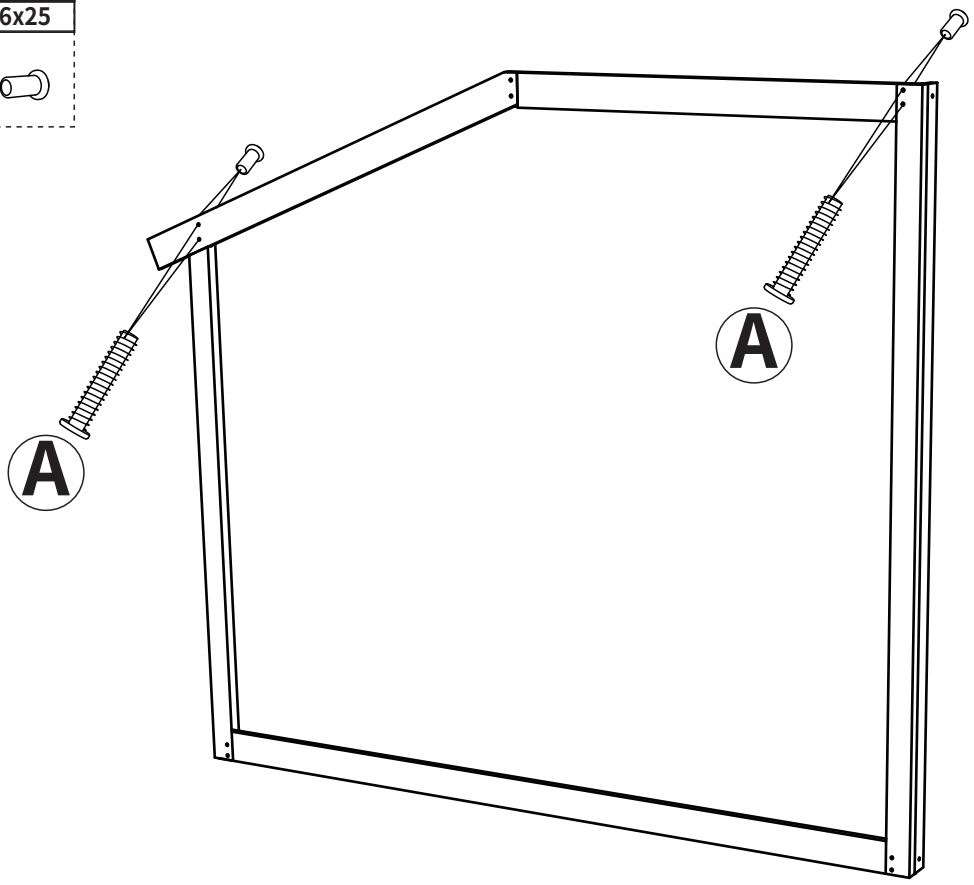

06

Ⓐ x 4
M6x25

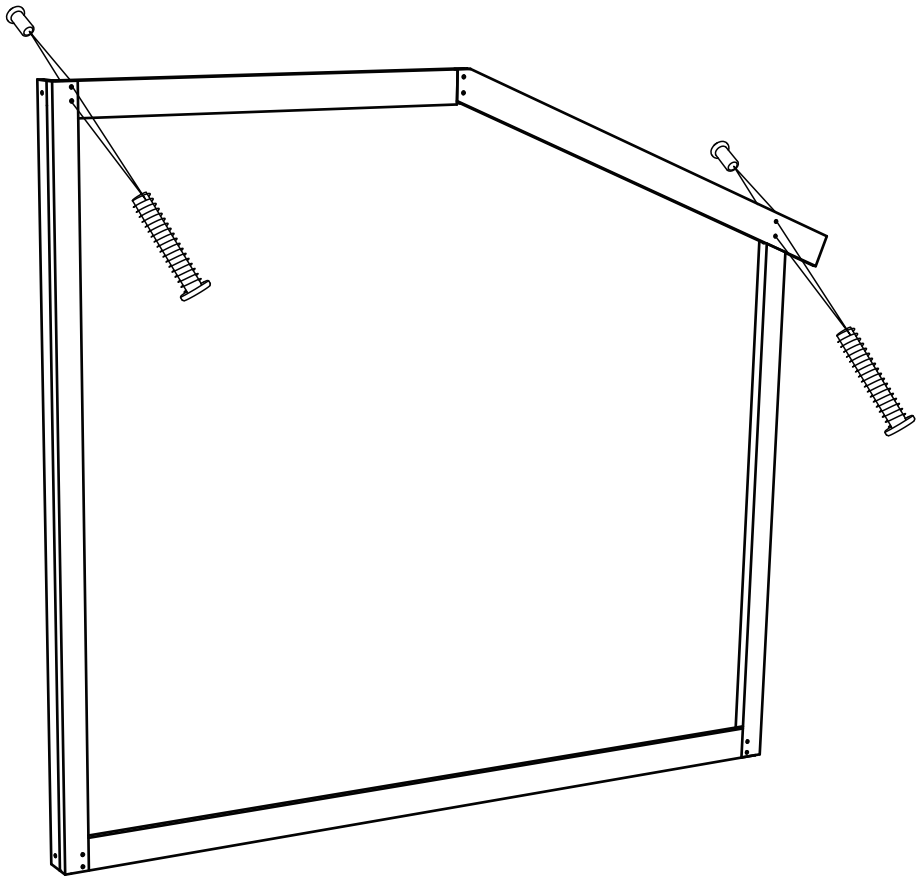

07

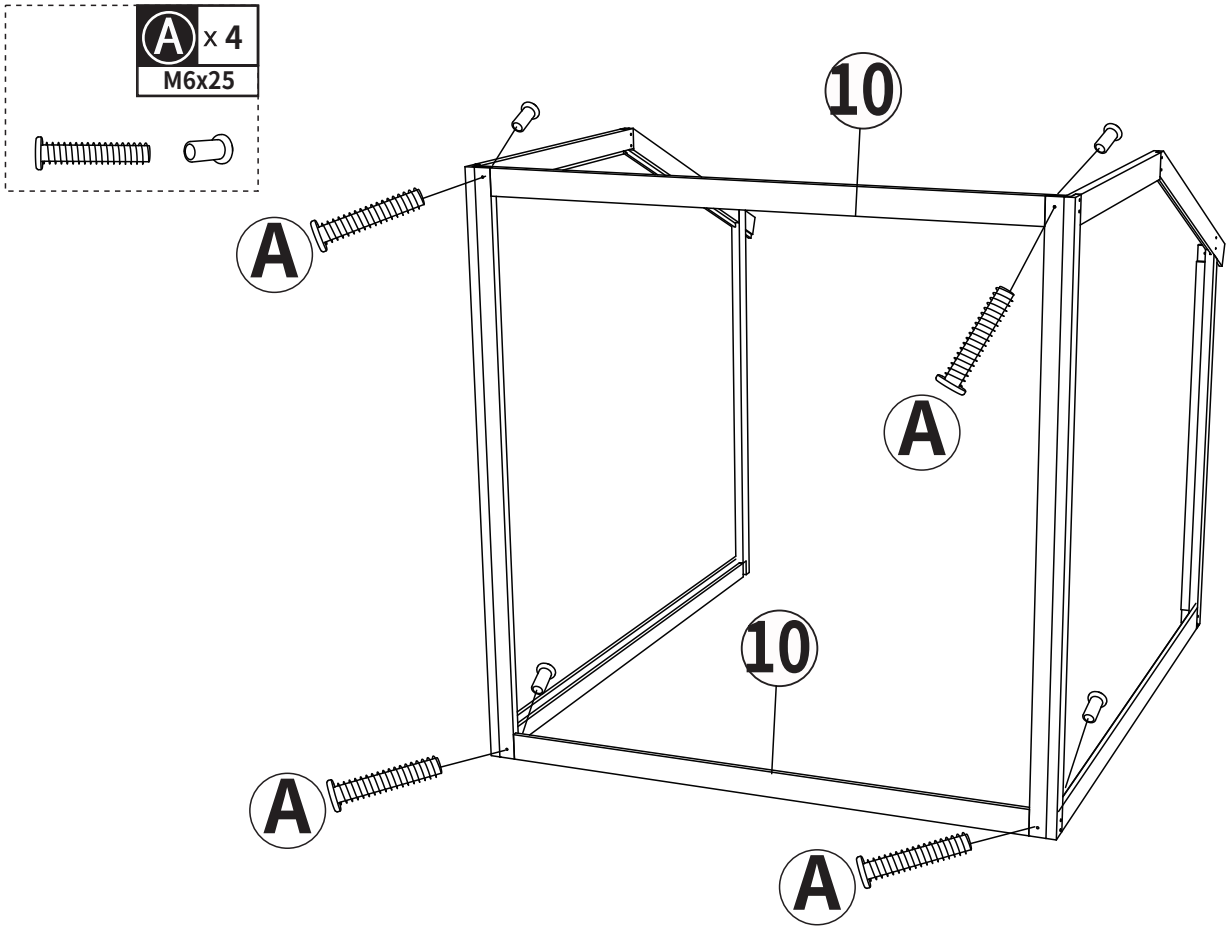

08

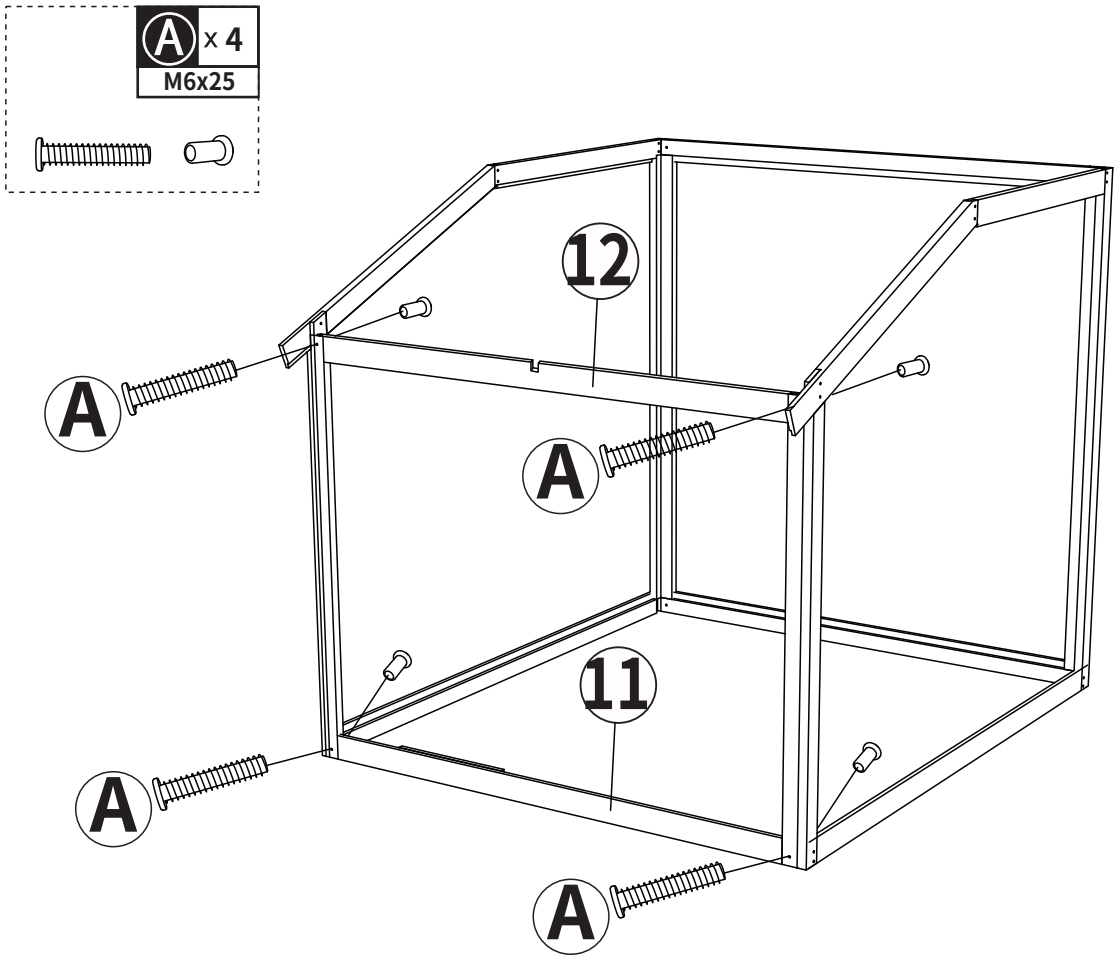

09

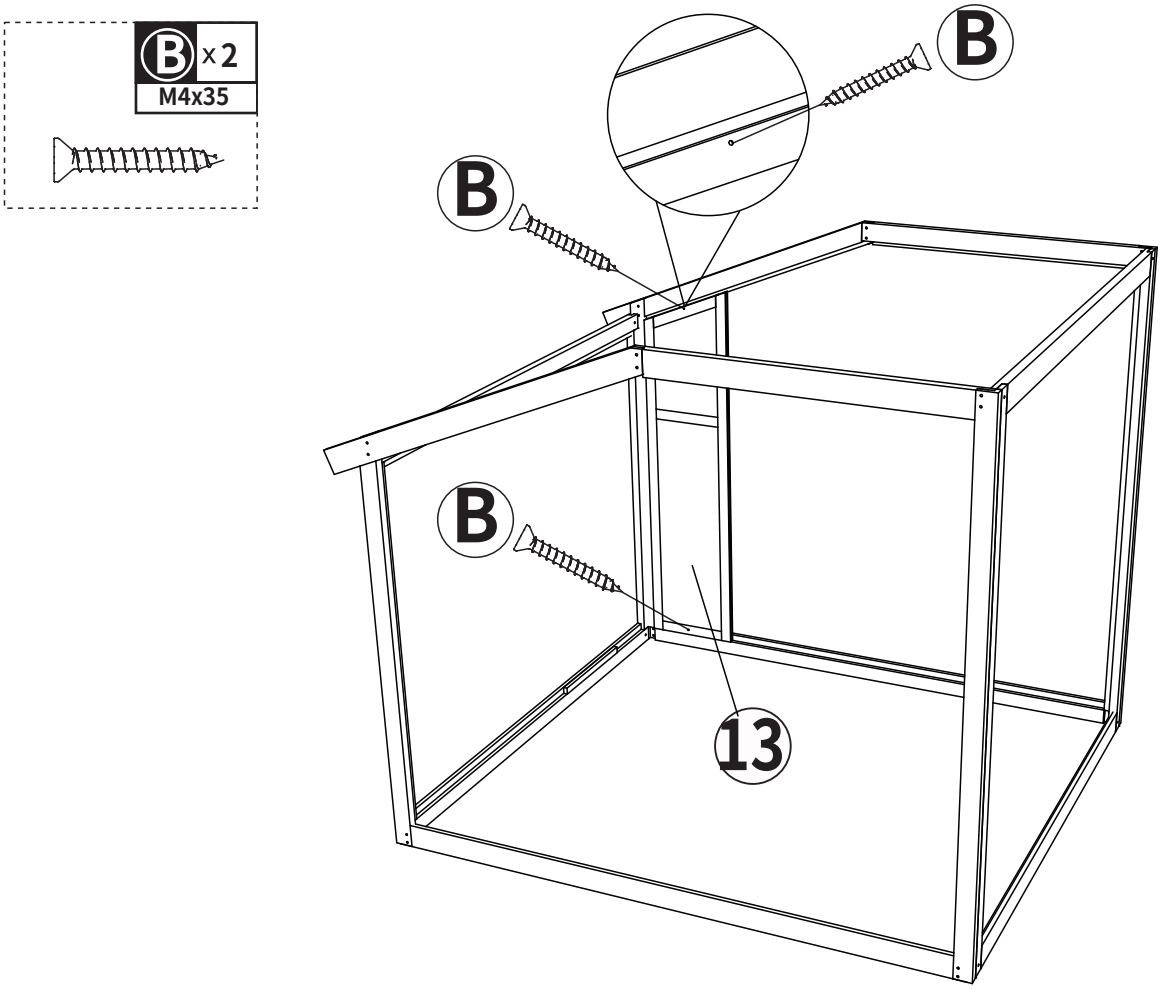

10

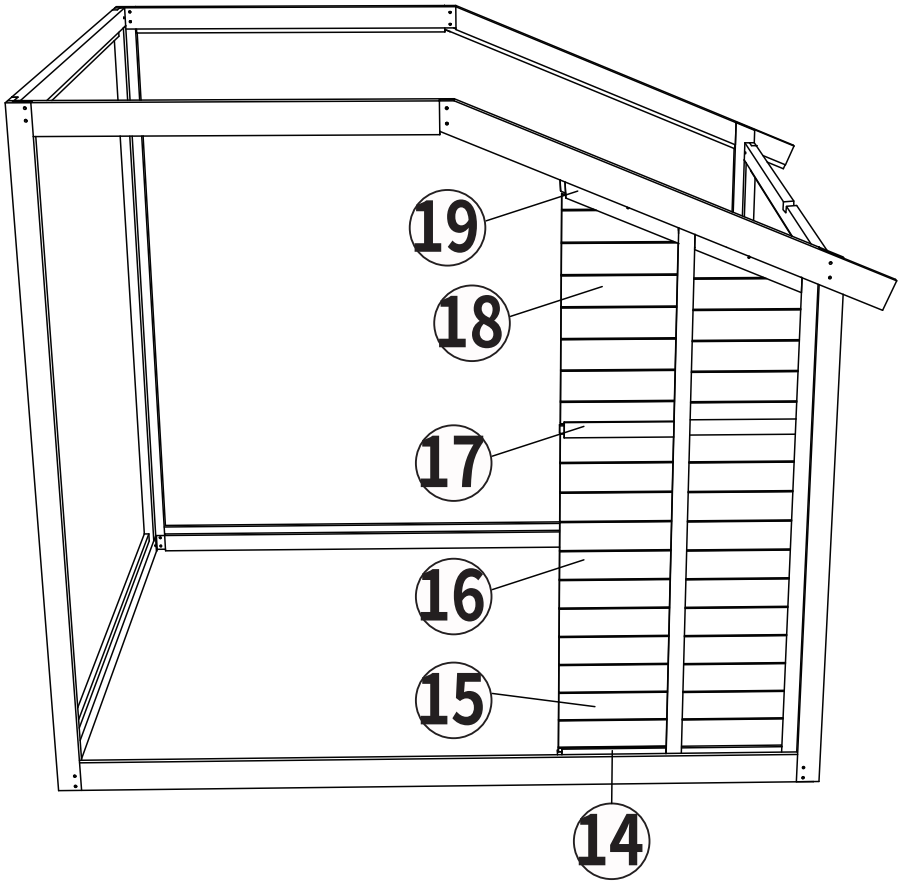

11

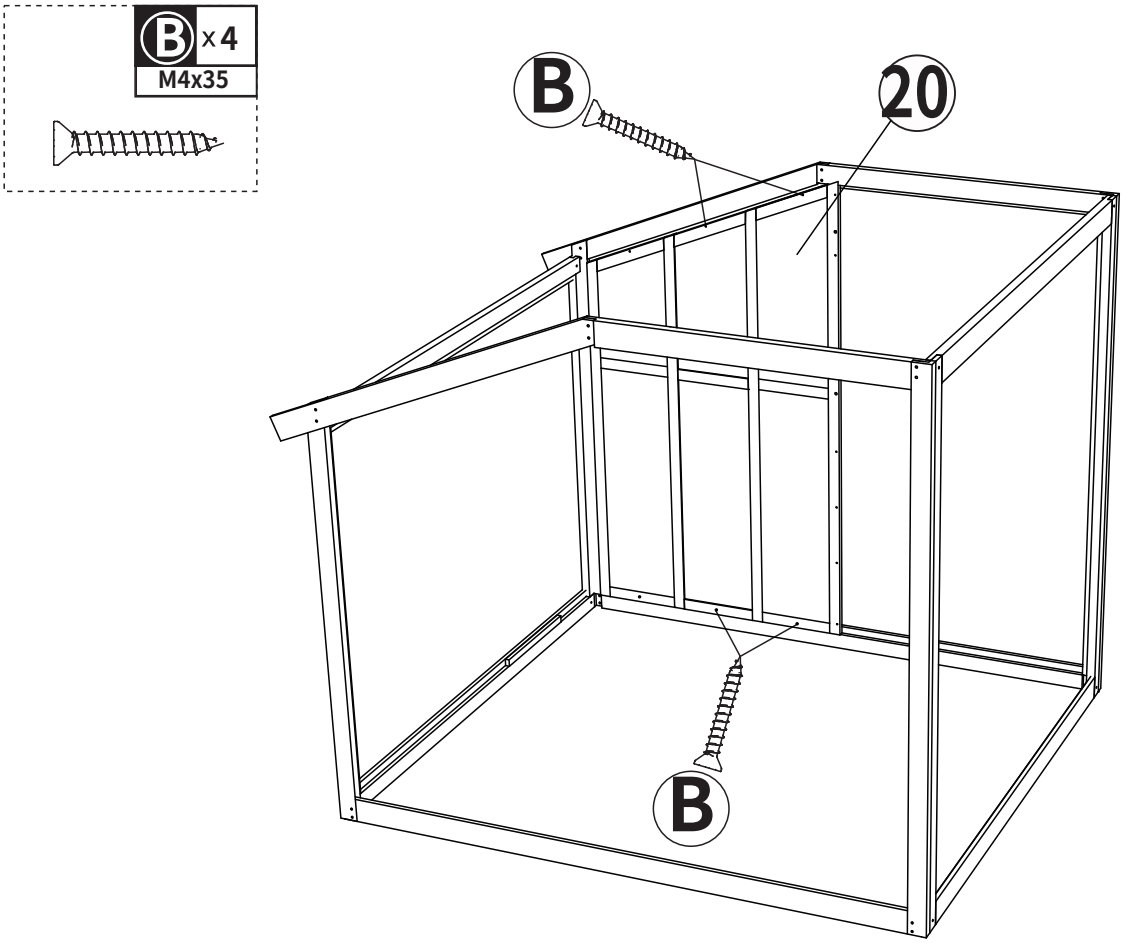

12

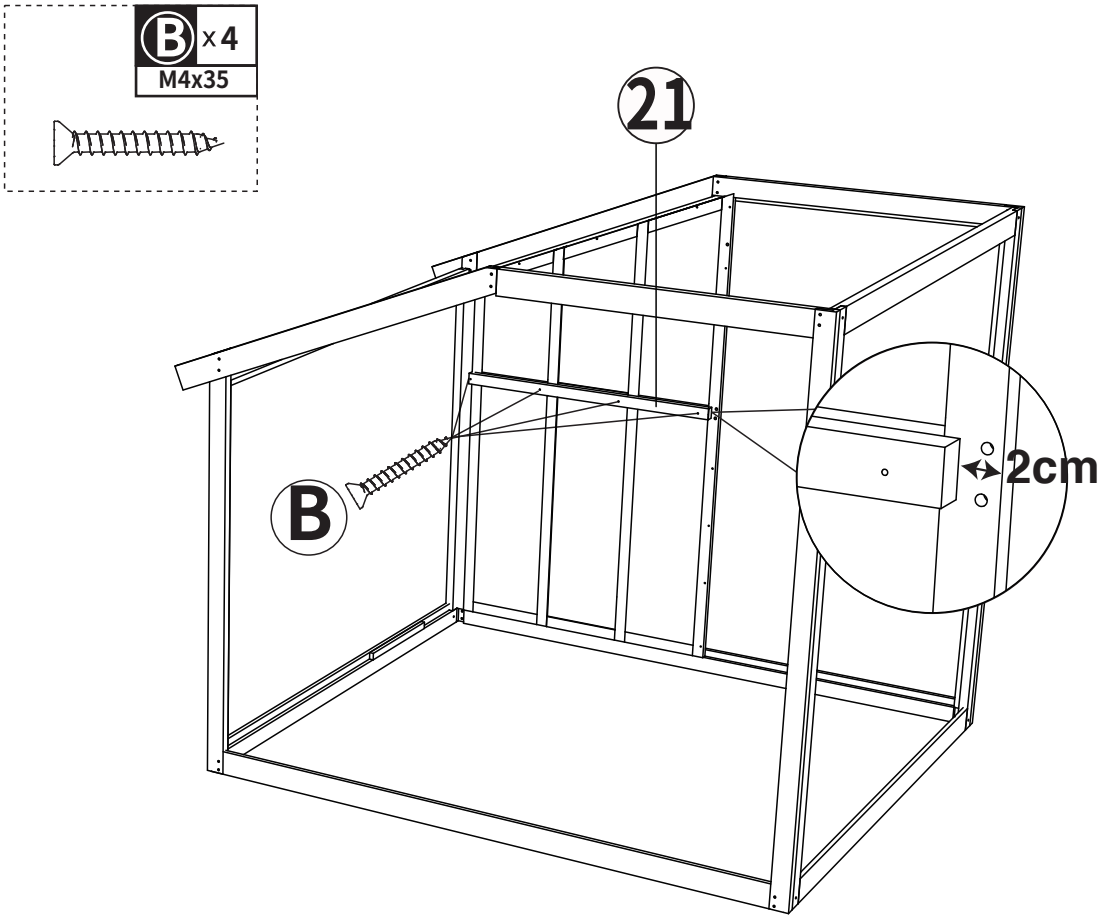

13

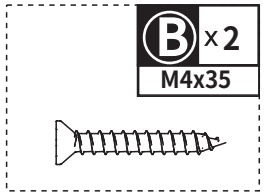

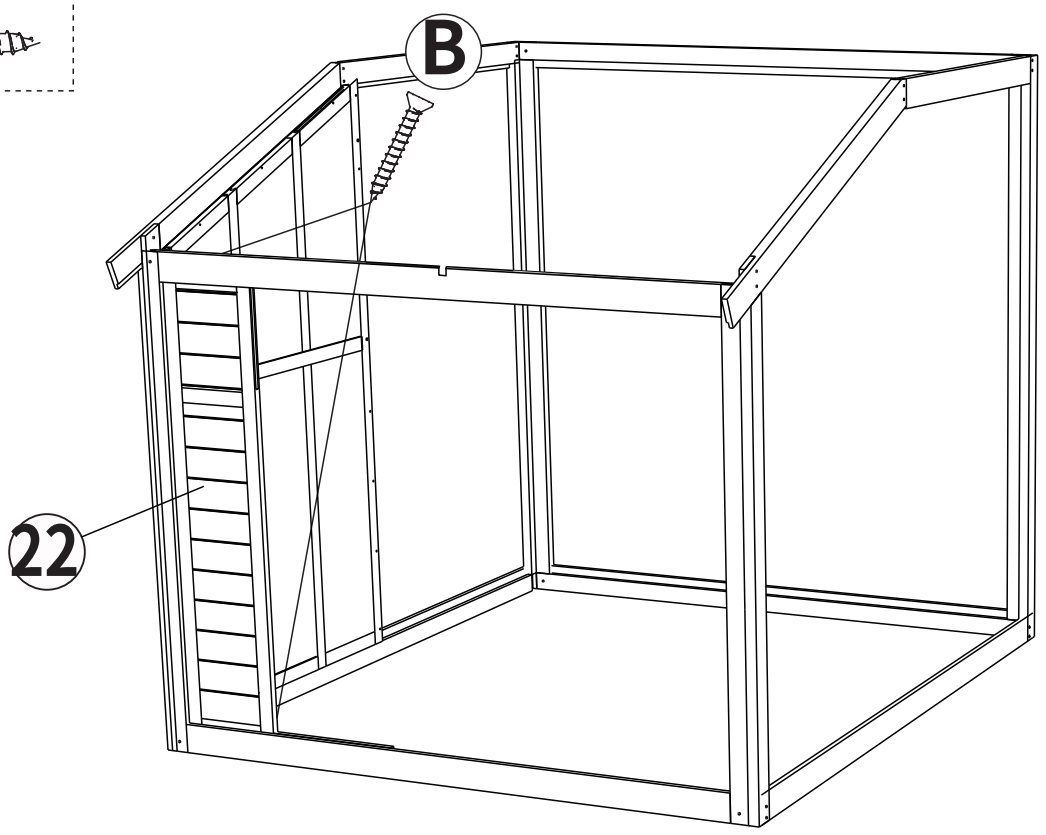

14

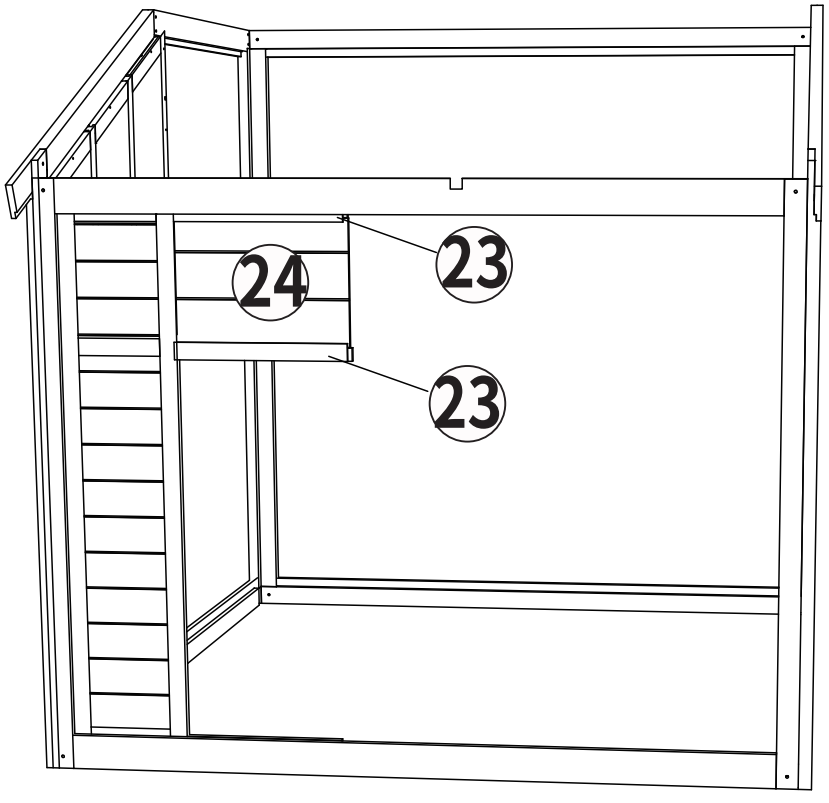

15

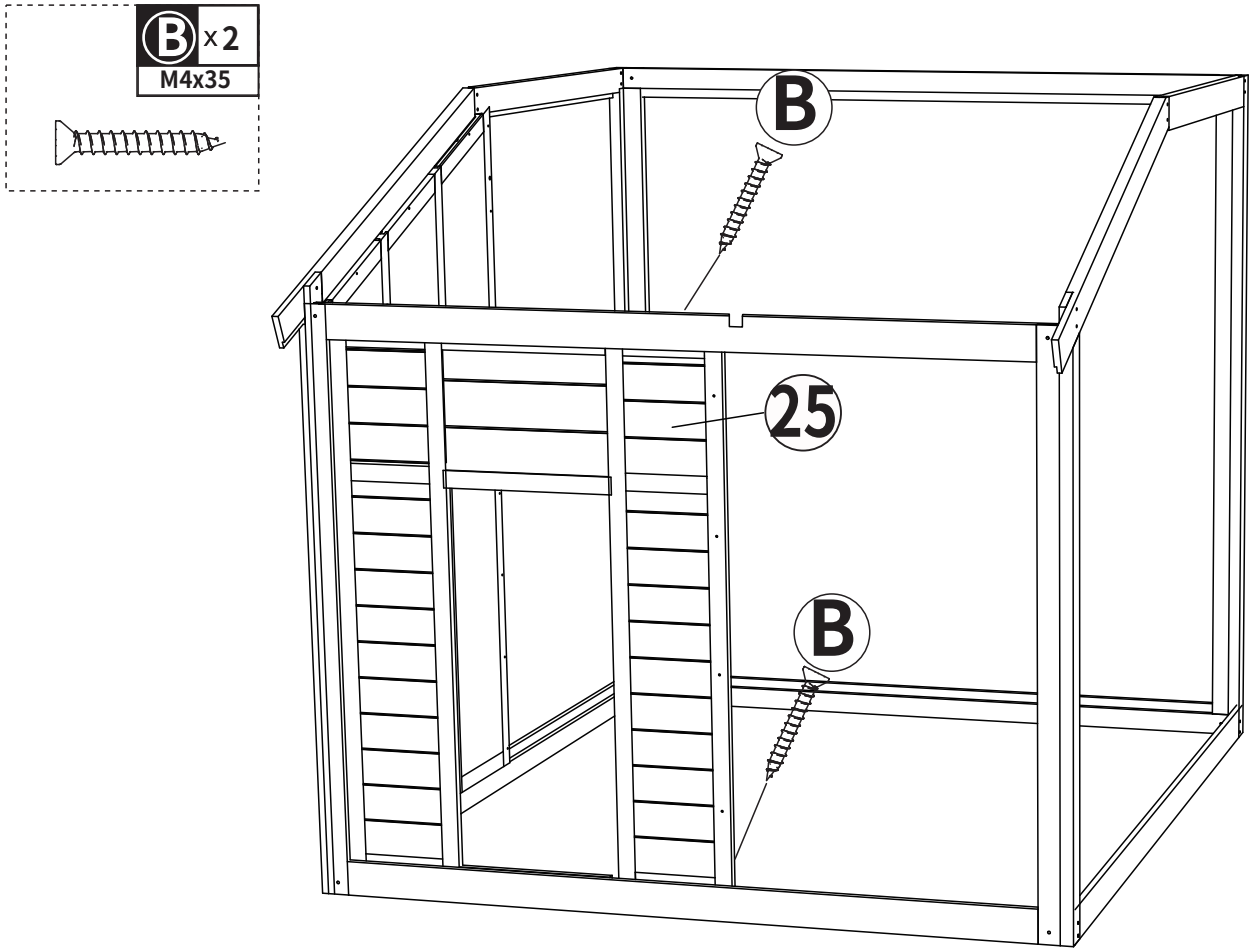

16

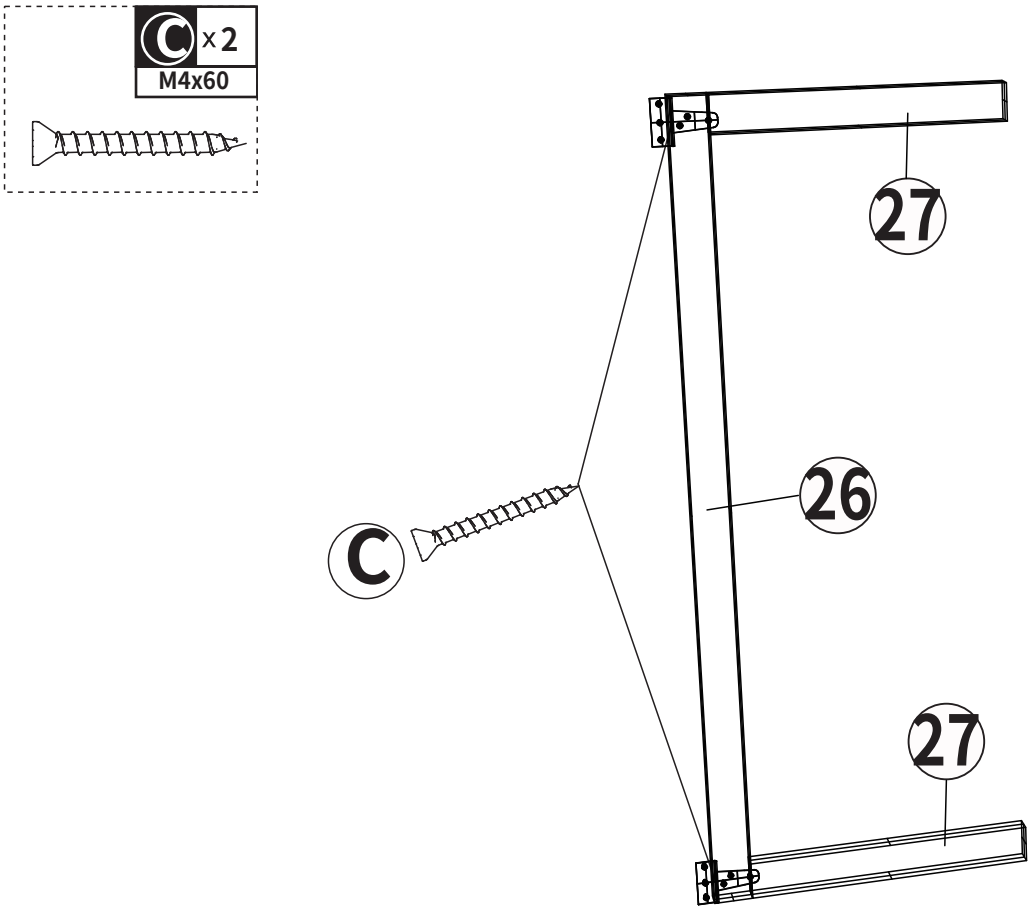

17

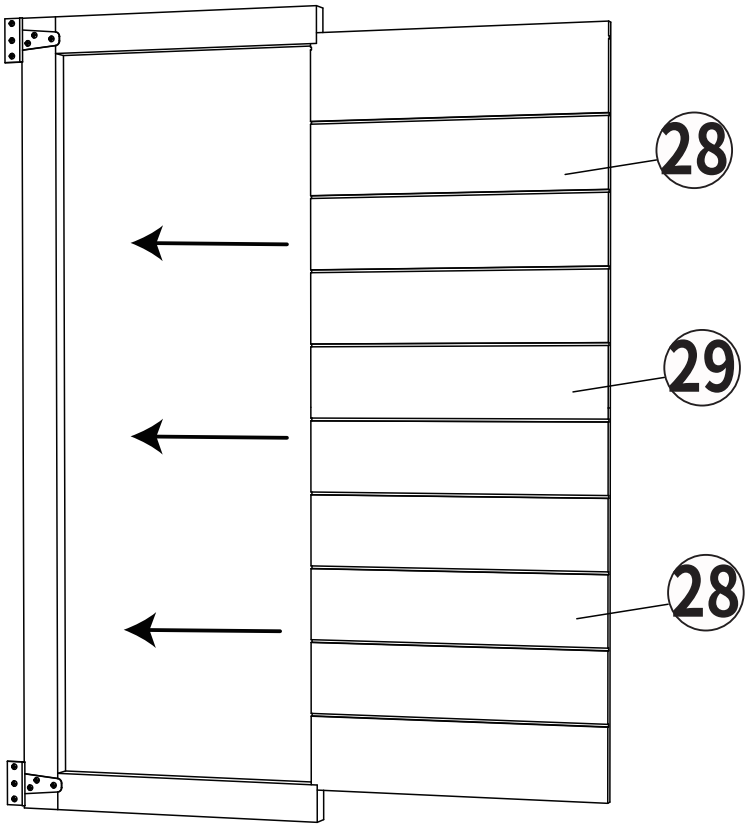

18

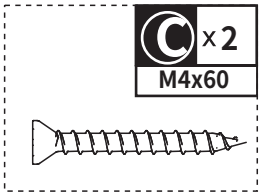

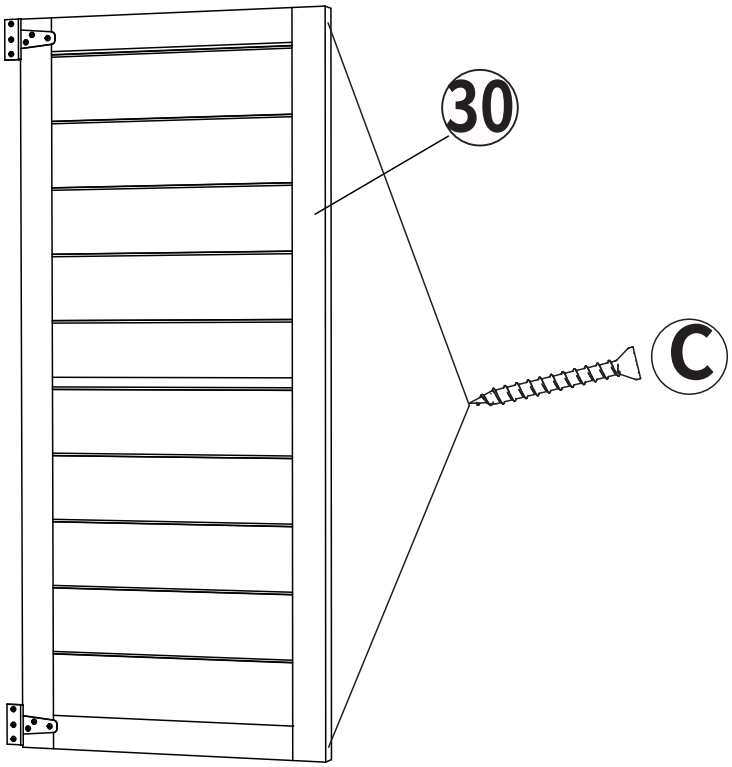

19

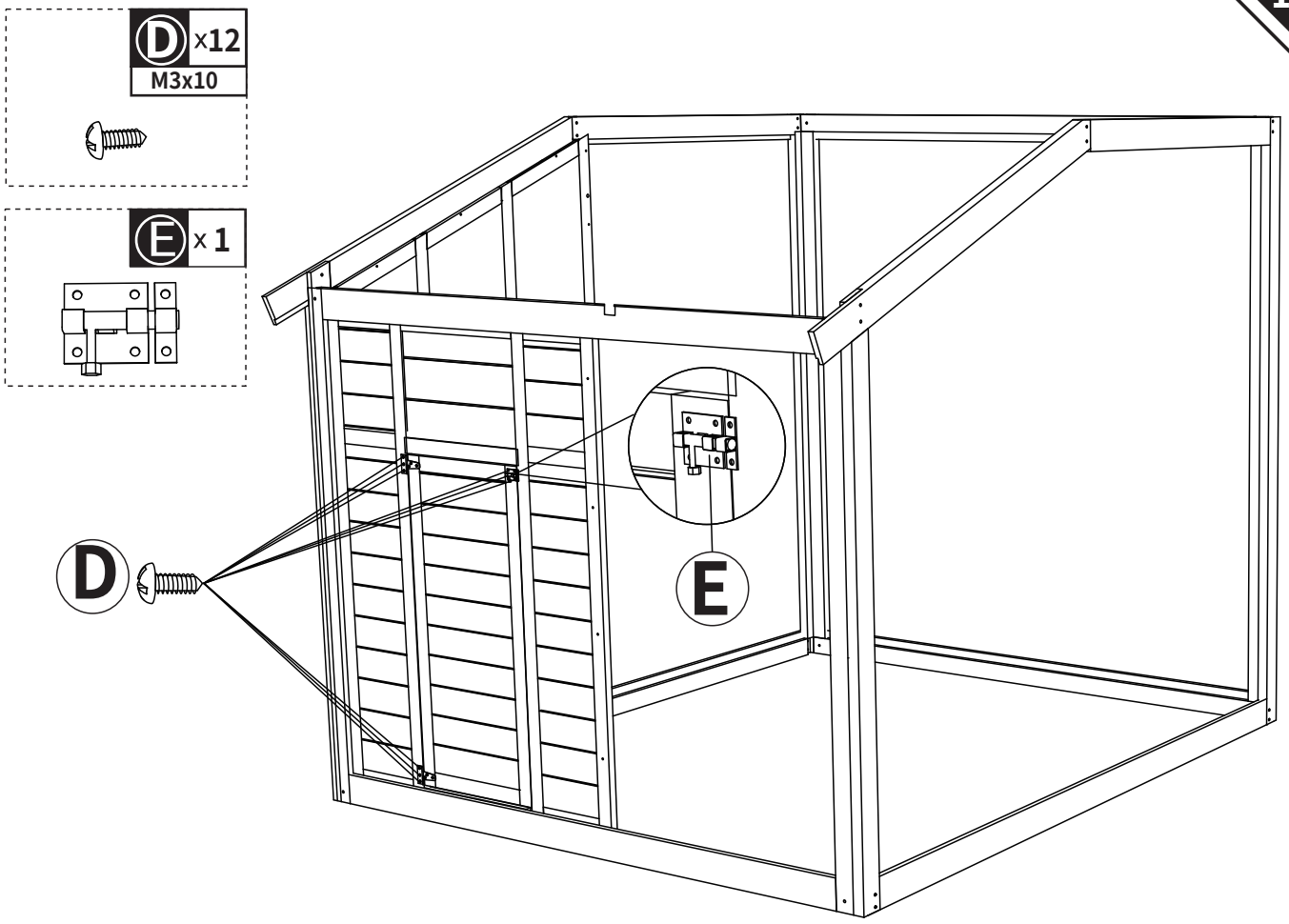

20

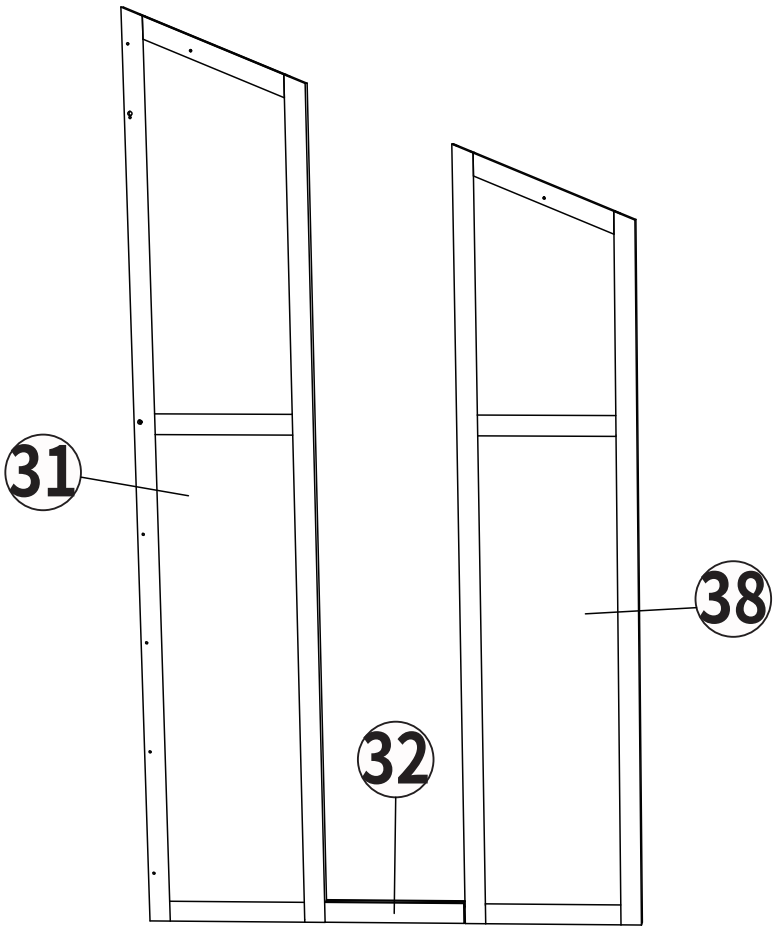

21

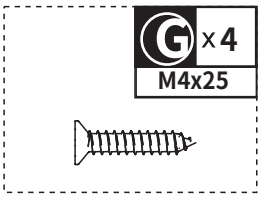

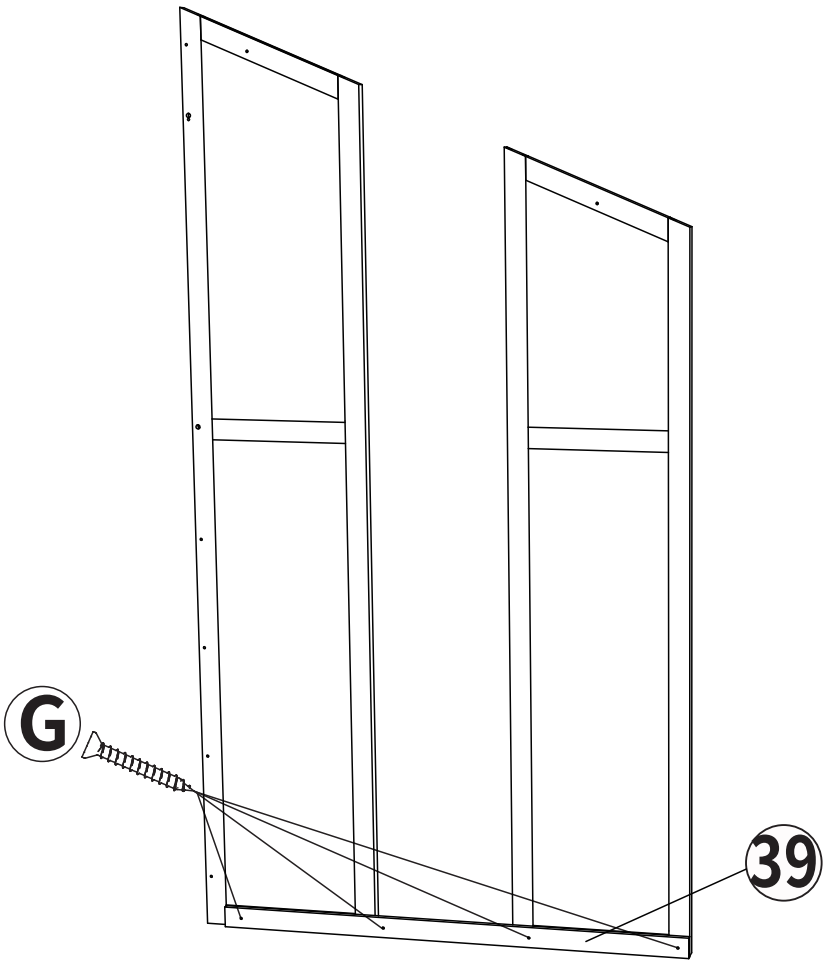

22

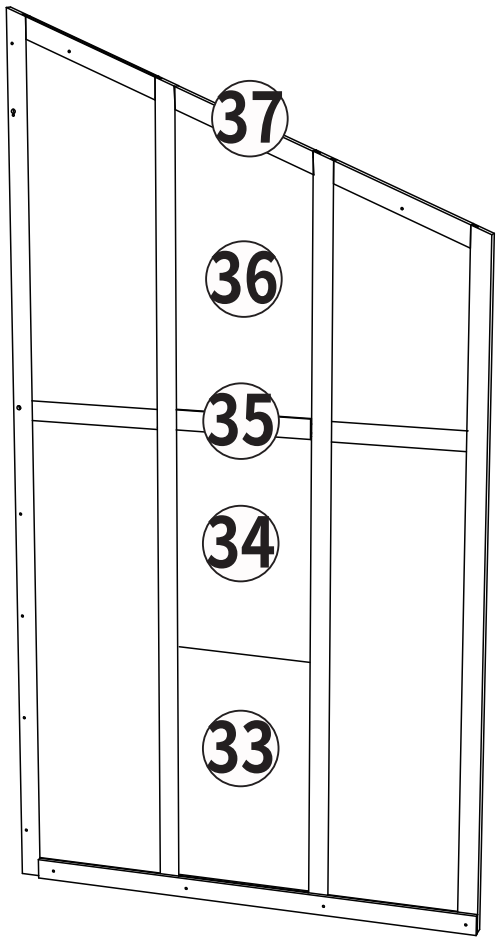

23

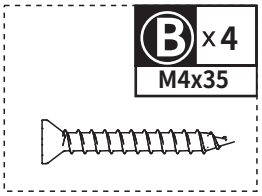

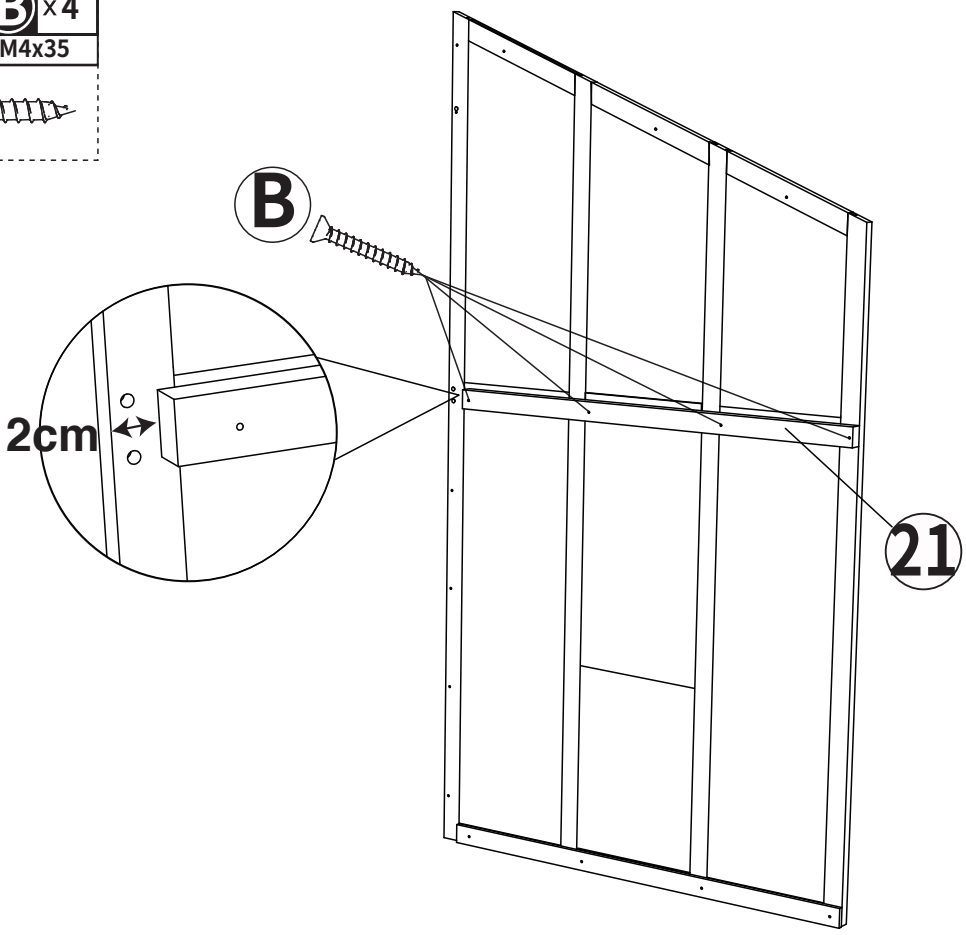

24

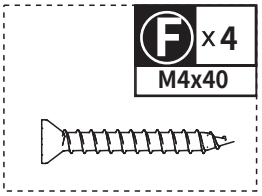

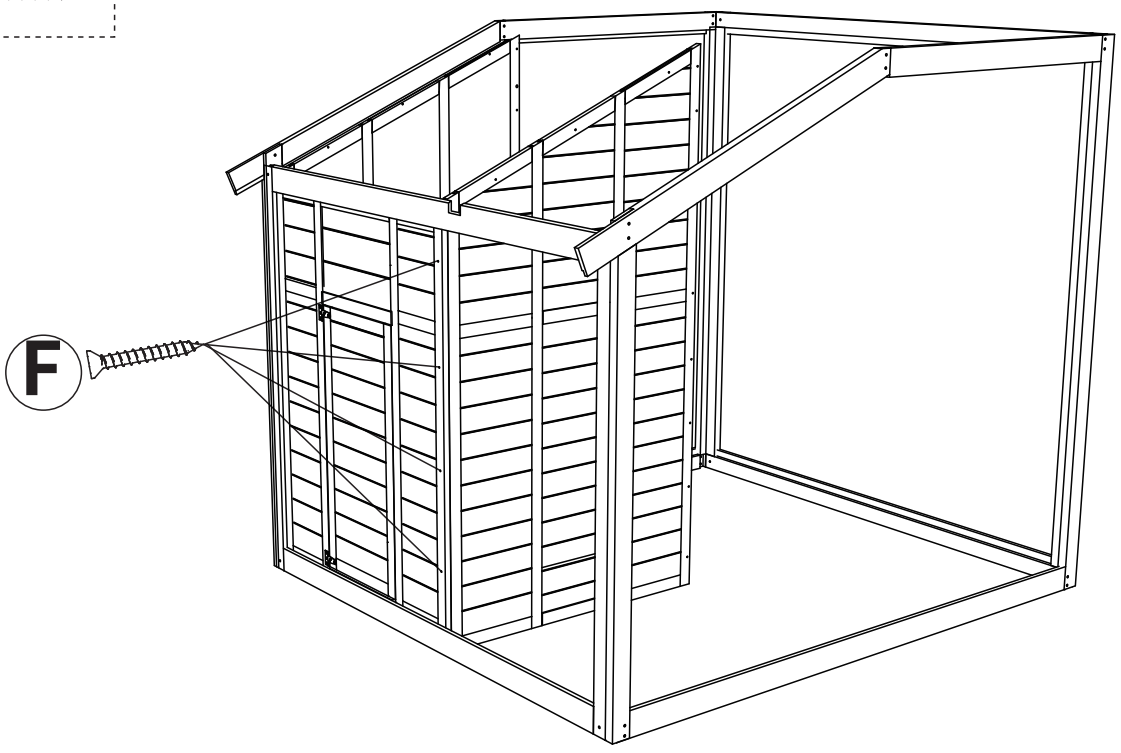

25

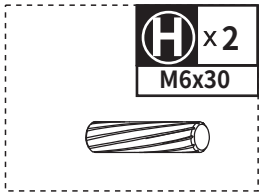

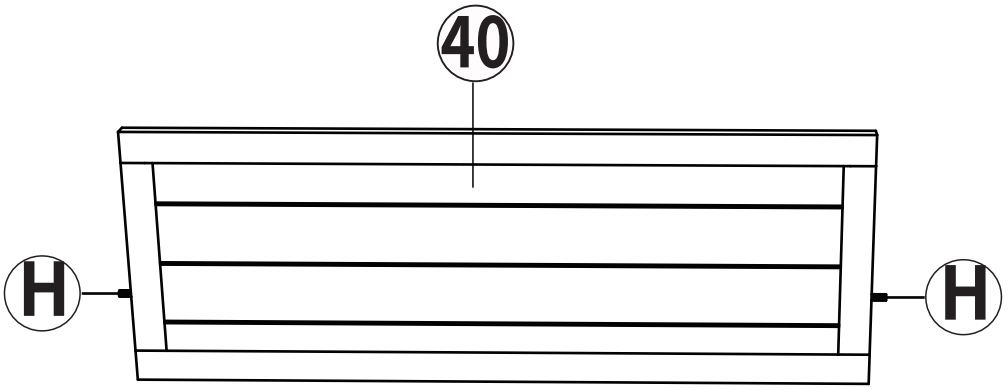

26

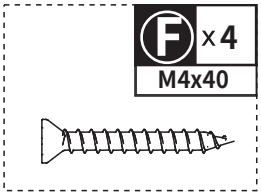

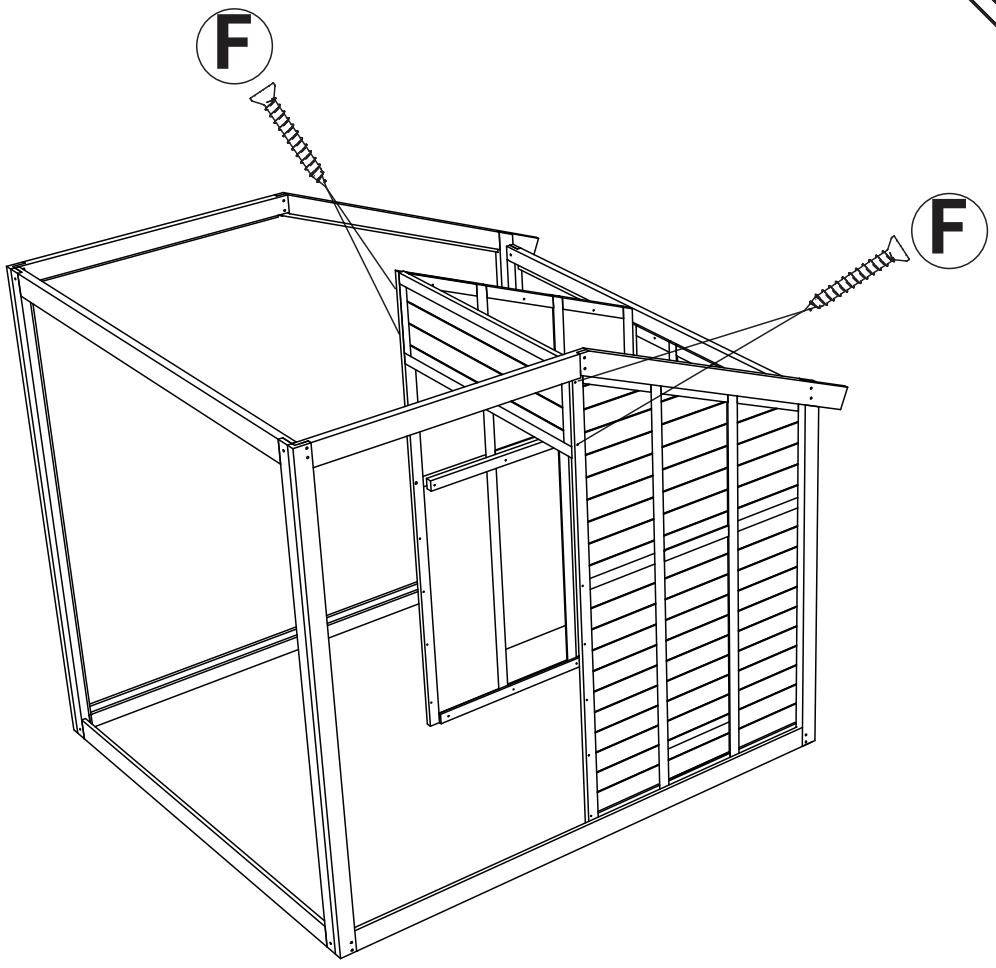

27

B x 3
M4x35



D x 8
M3x10



J x 2



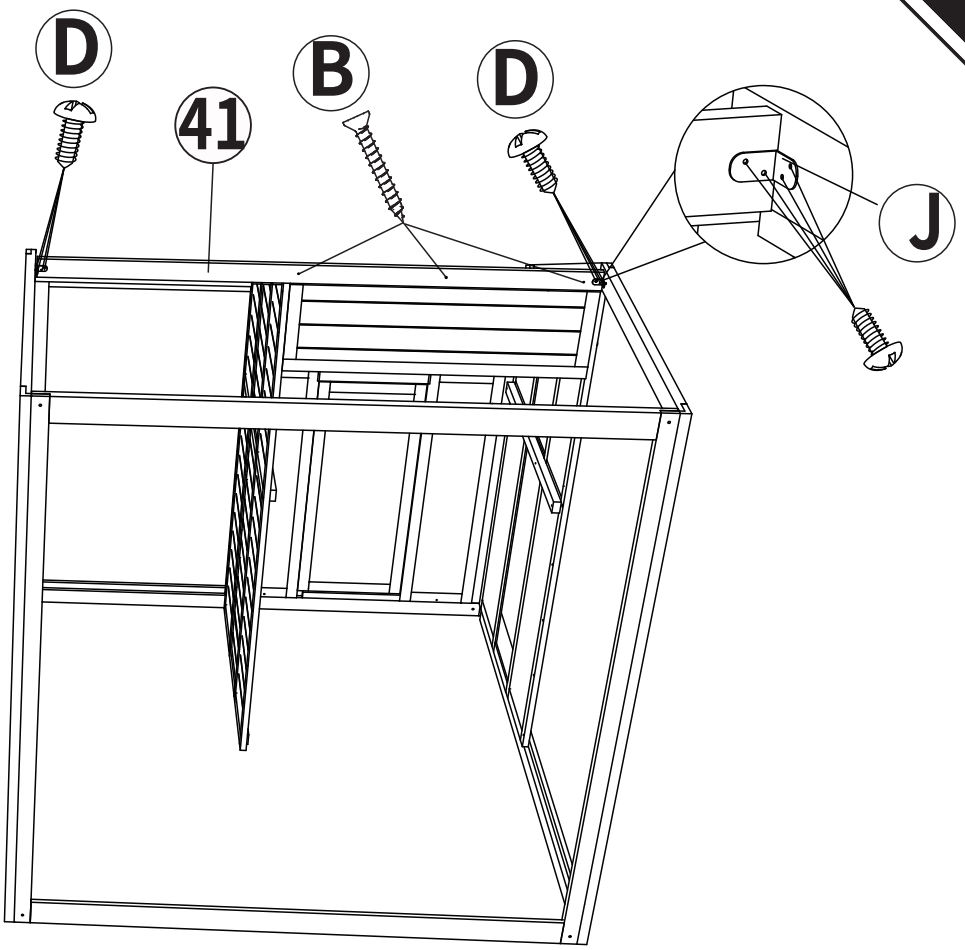

28

D x 8
M3x10



J x 2



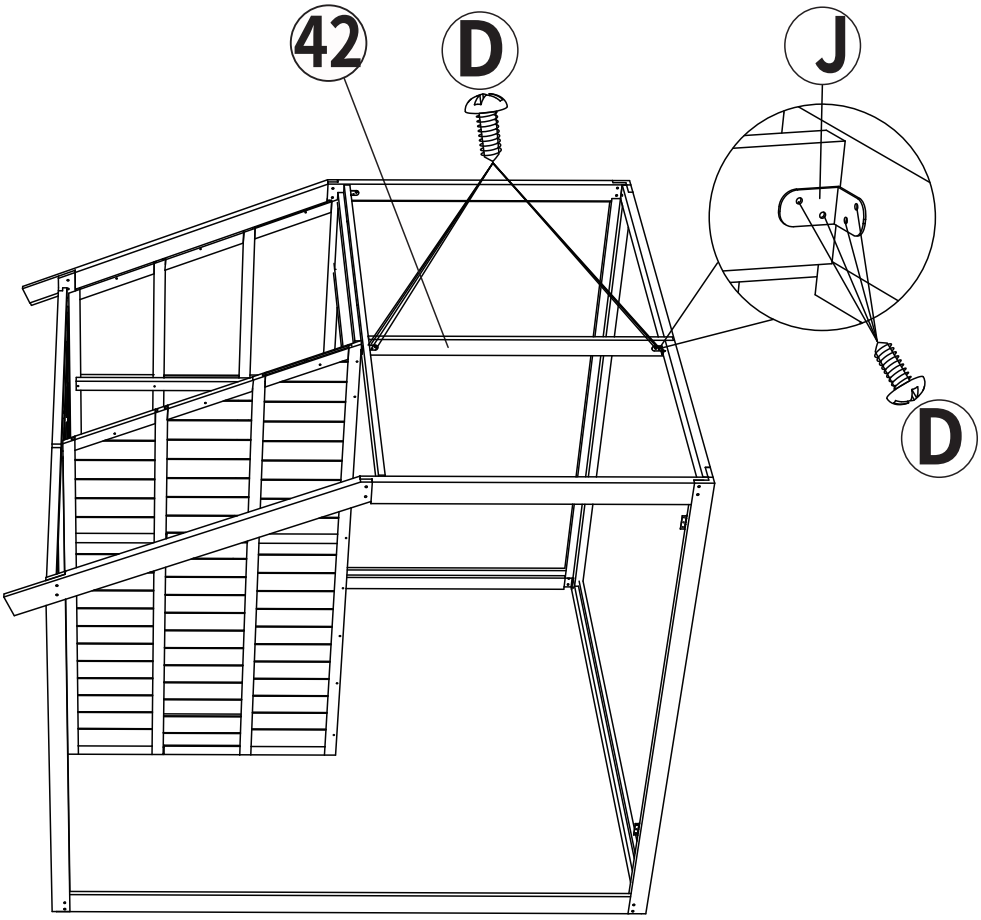

29

B x3
M4x35

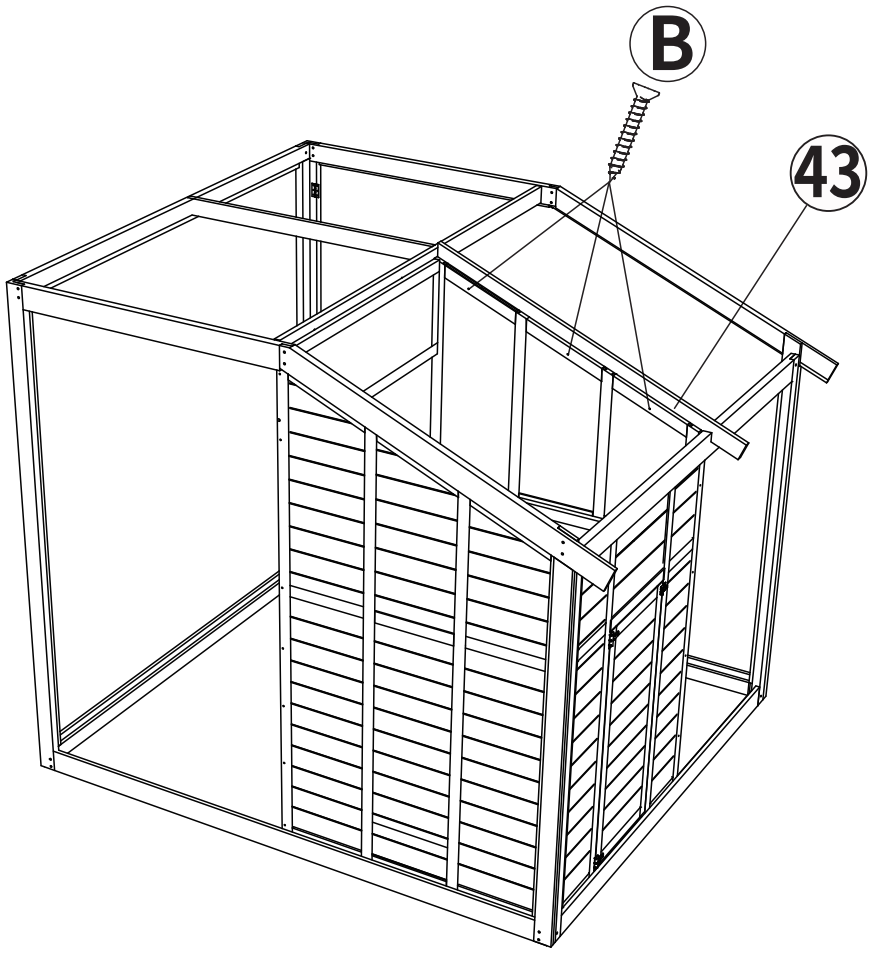

30

H x4
M6x30

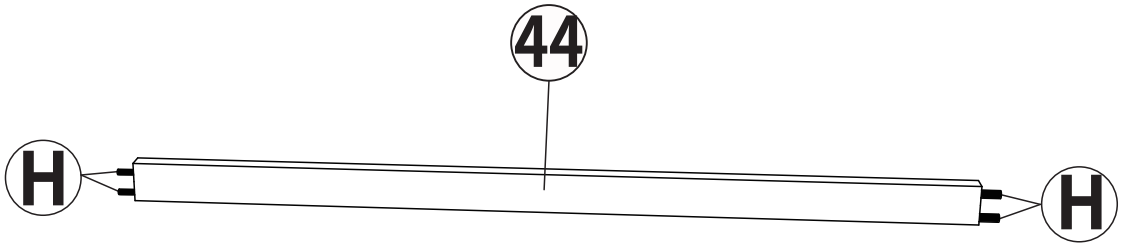

31

F x 2
M4x40

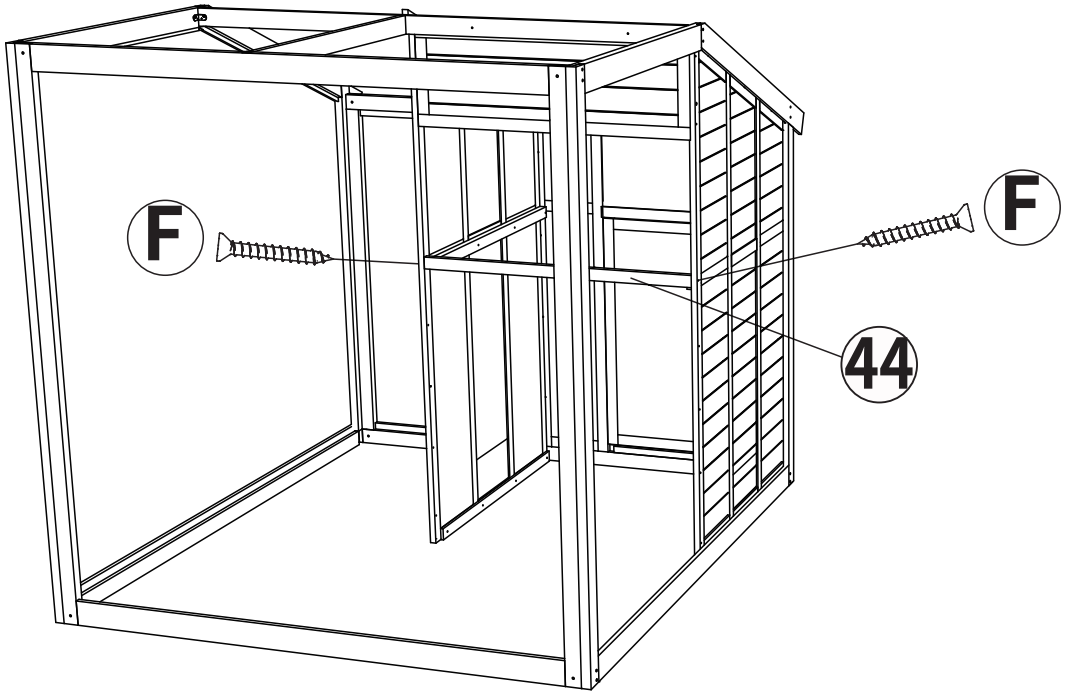

32

I x 2
M8x30

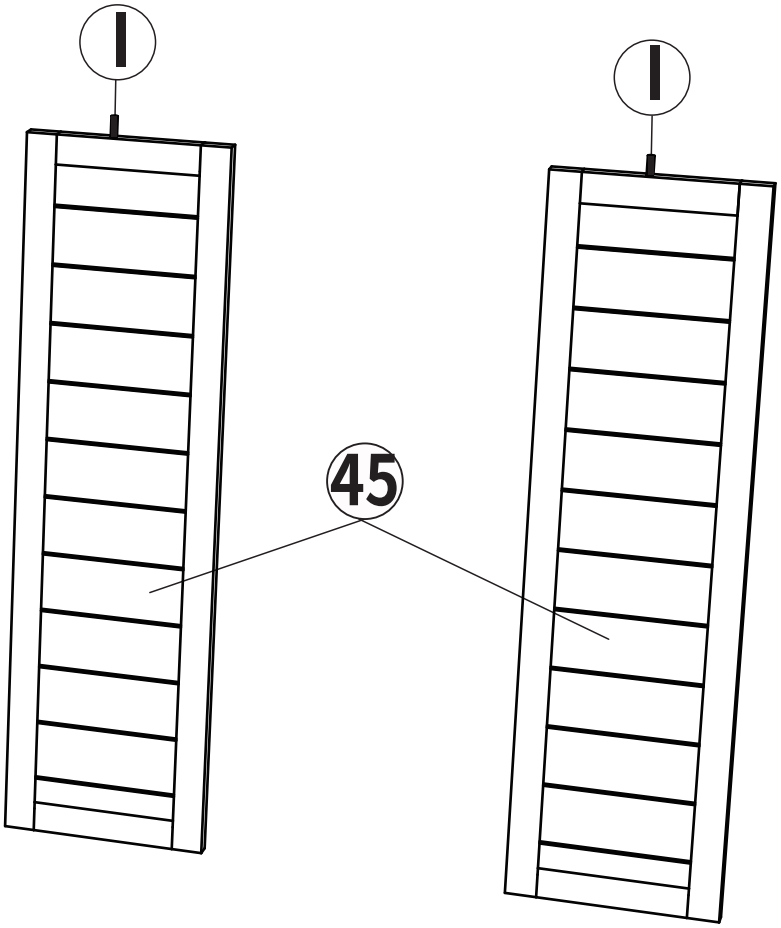

33

C x 2
M4x60

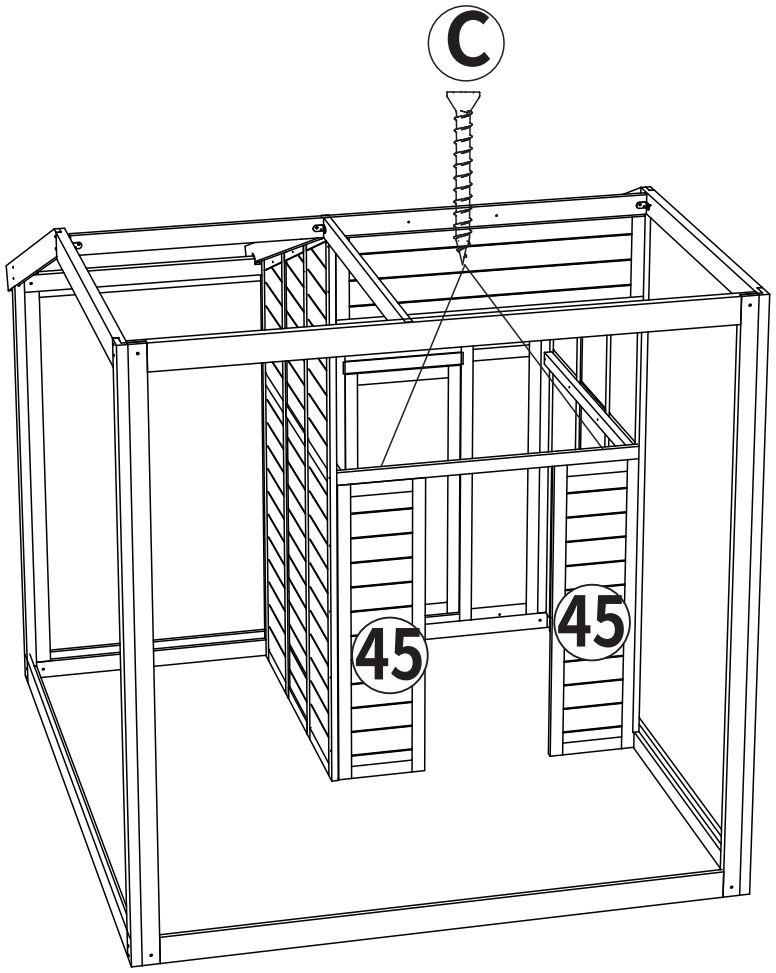

34

F x 8
M4x40

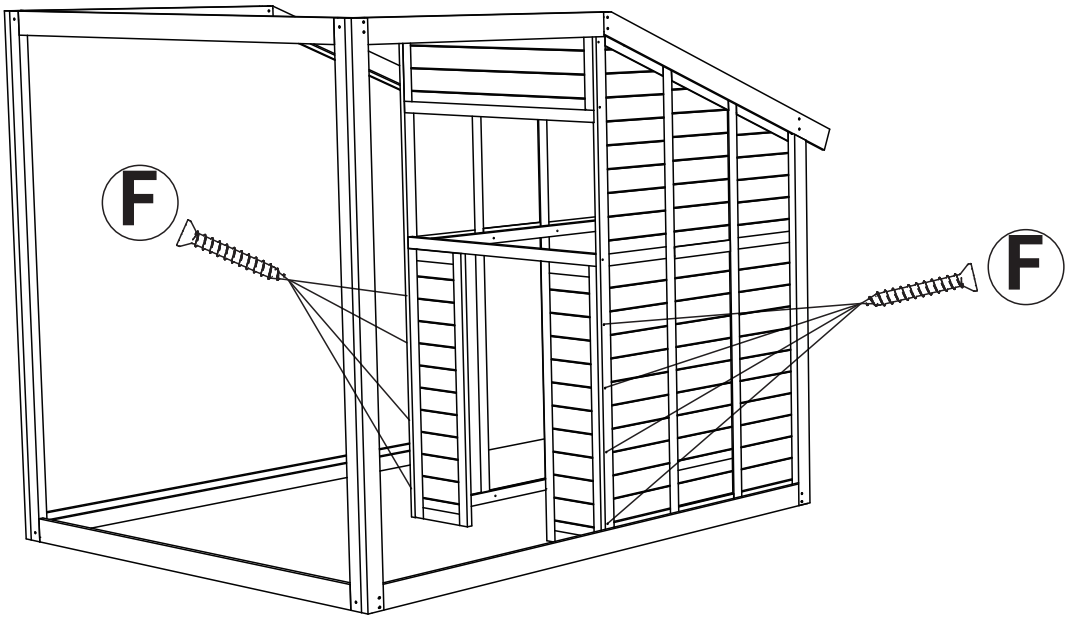

35

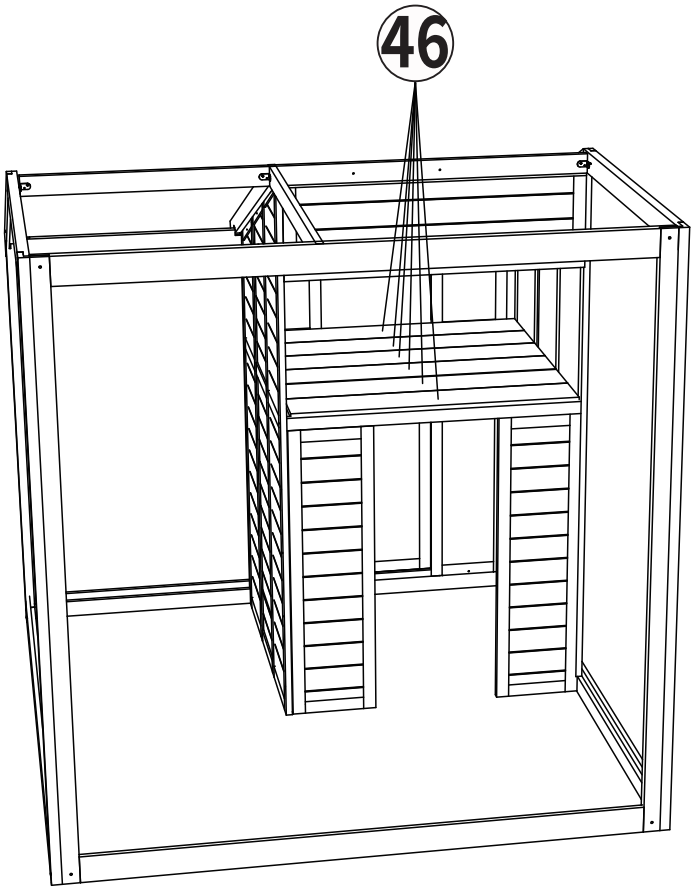

36

D x12
M3x10



E x 1

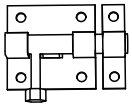

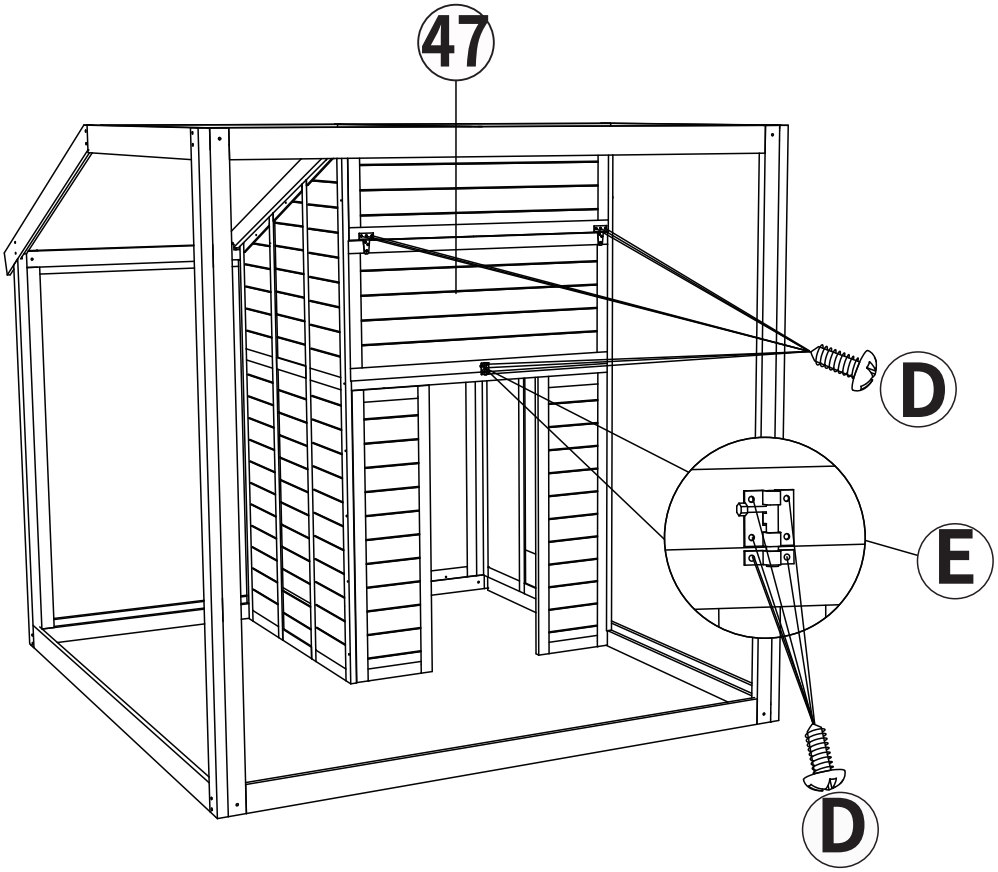

37

B x 8
M4x35

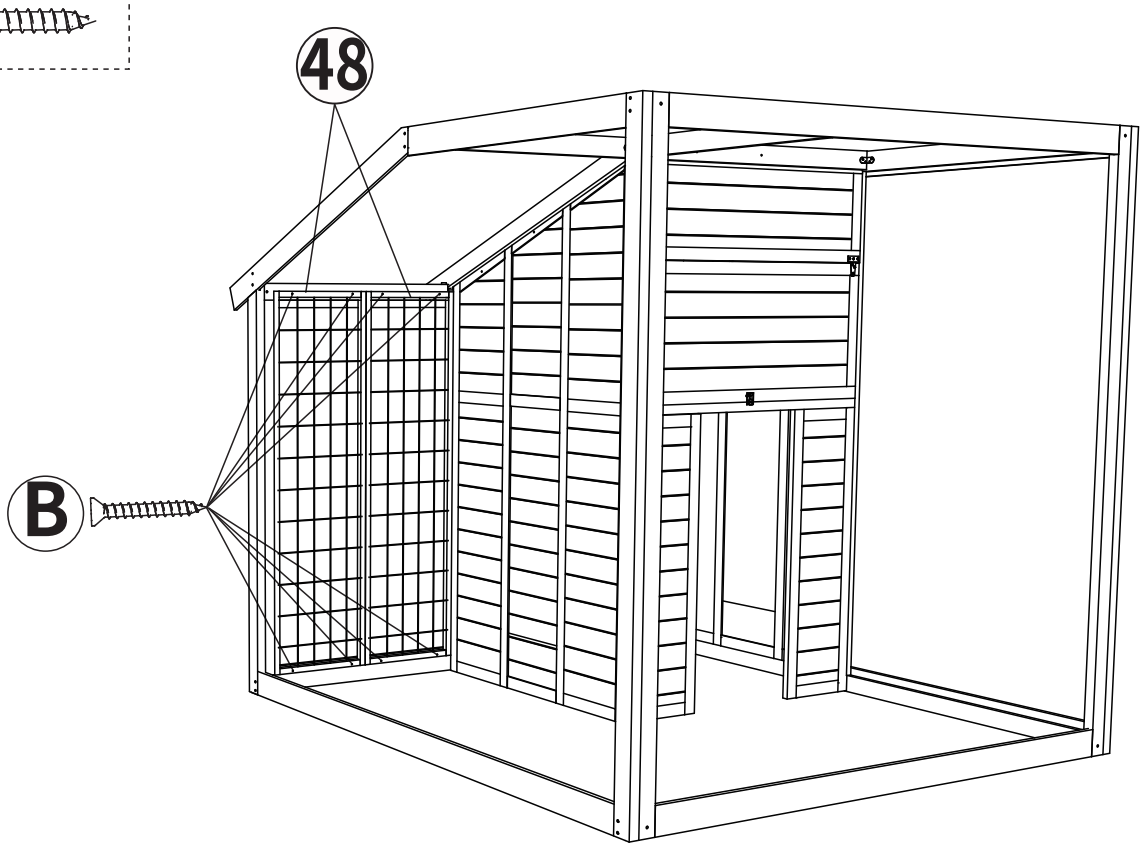

38

B x12
M4x35

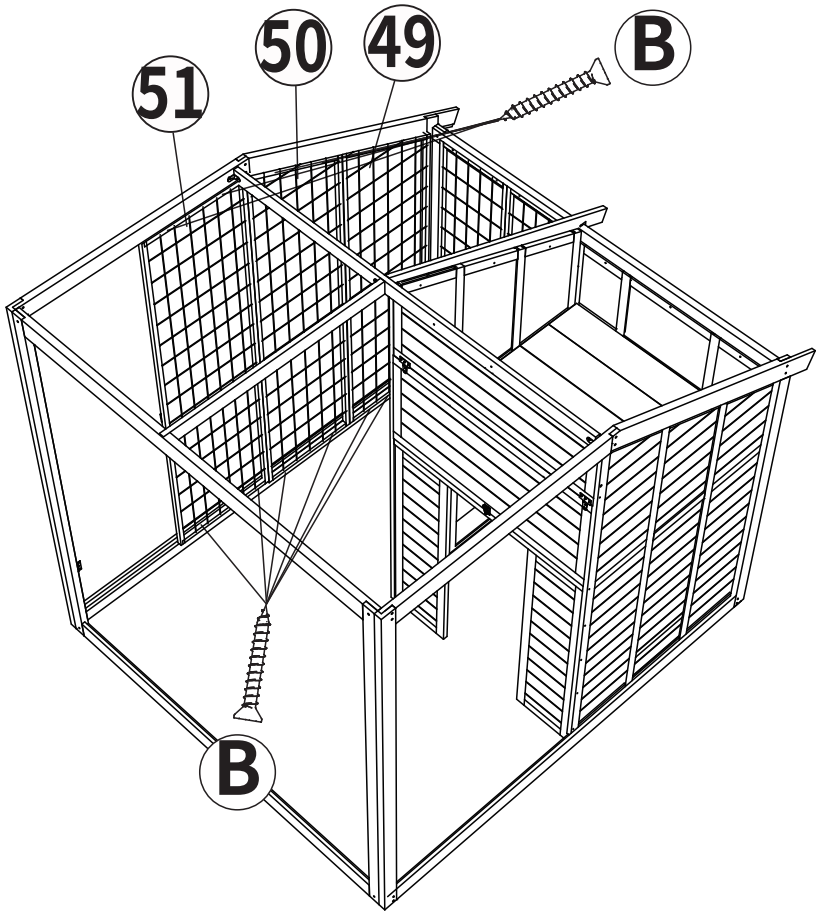

39

G x 6
M4x25

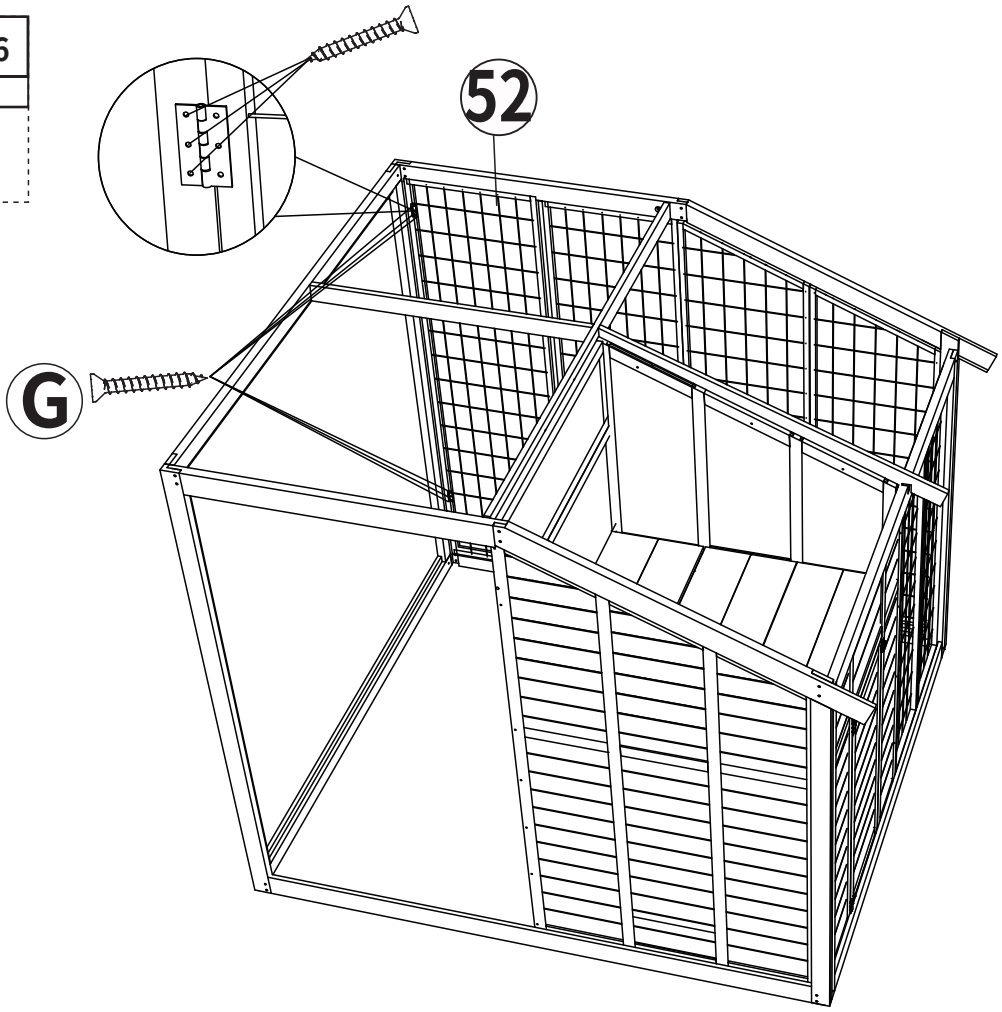

40

B x16
M4x35

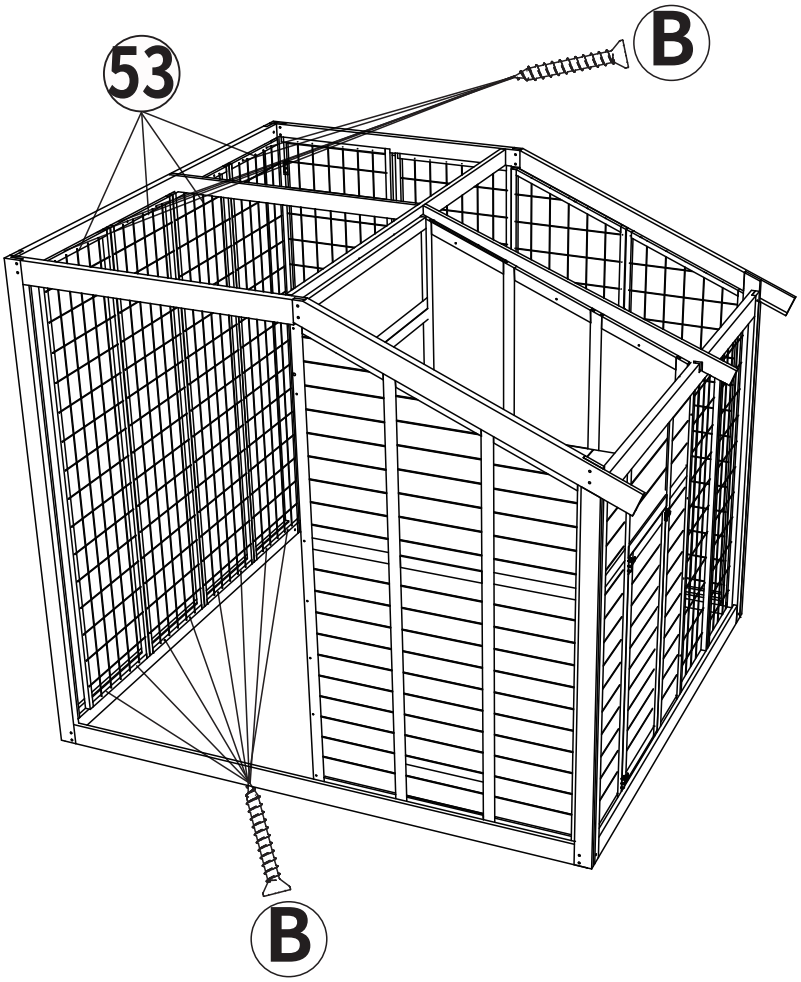

41

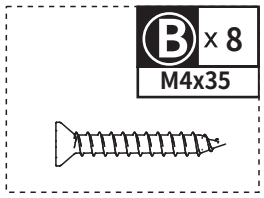

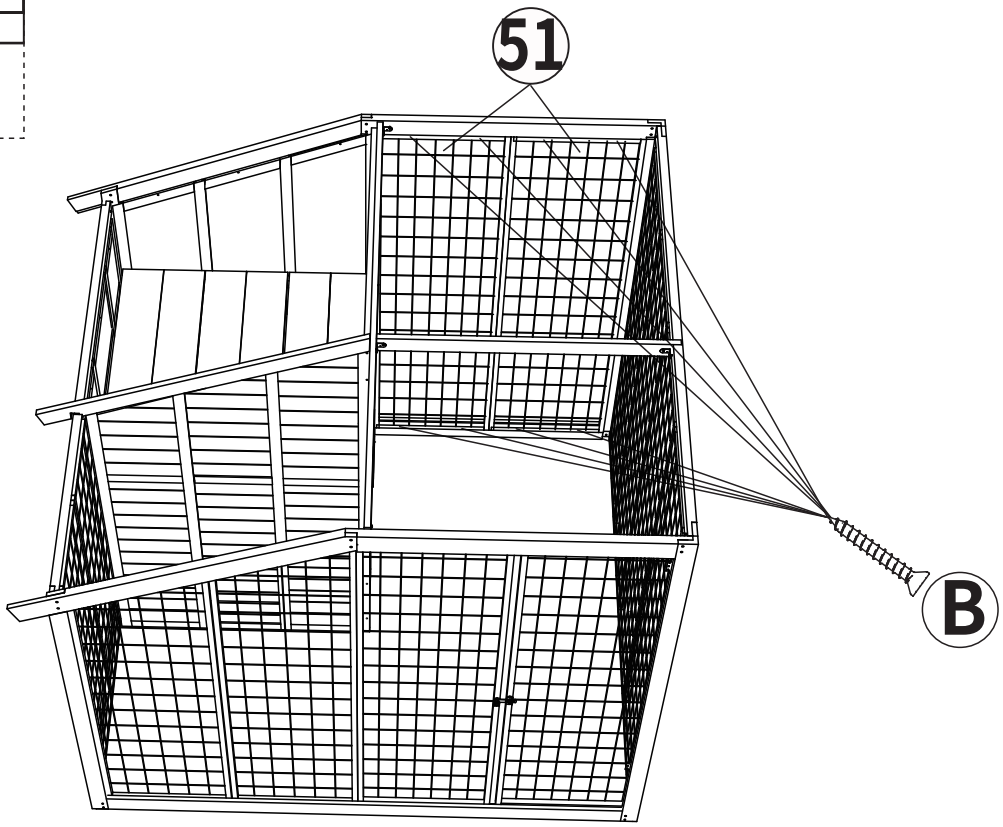

42

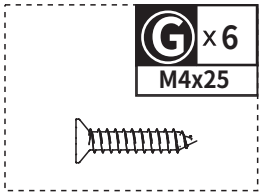

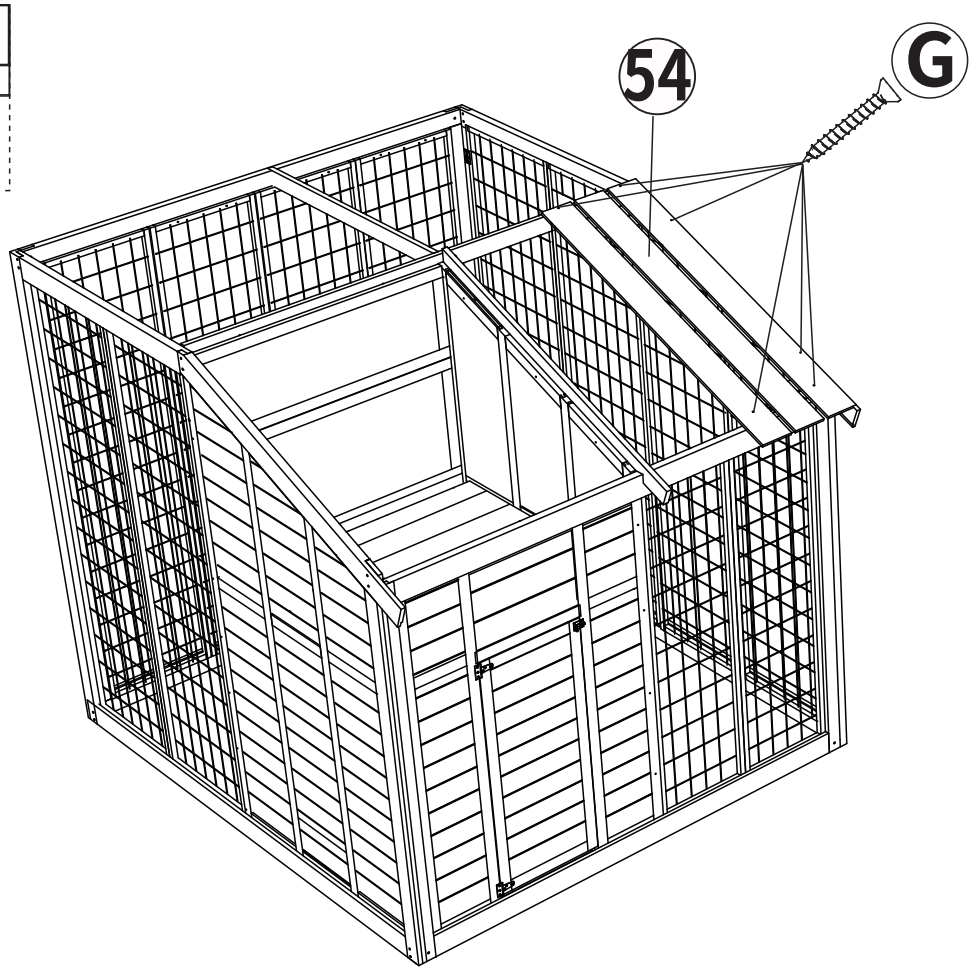

43

G x4
M4x25

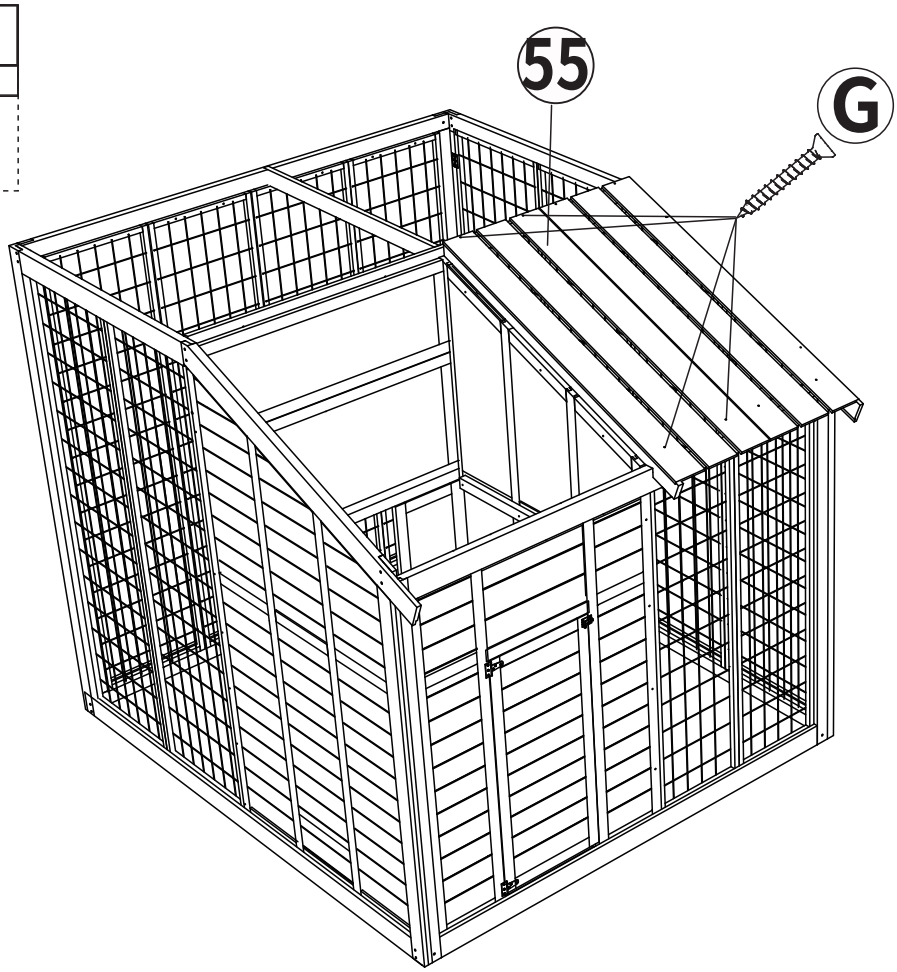

44

G x14
M4x25

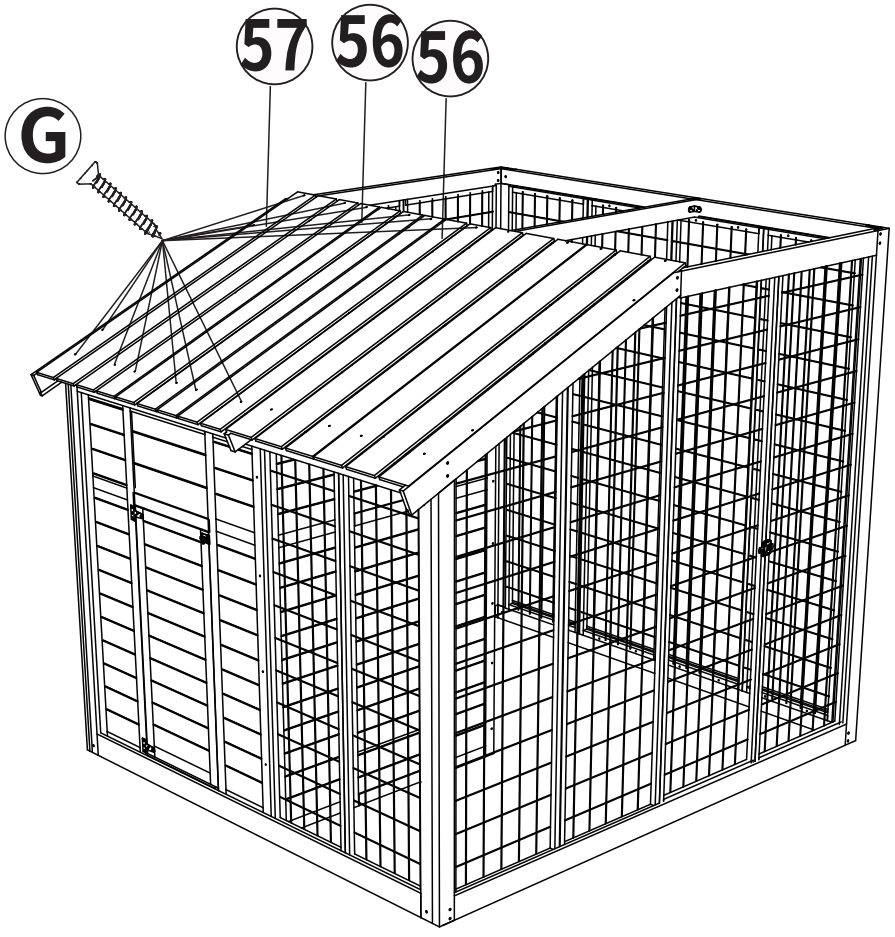

45

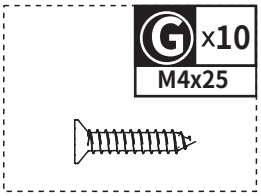

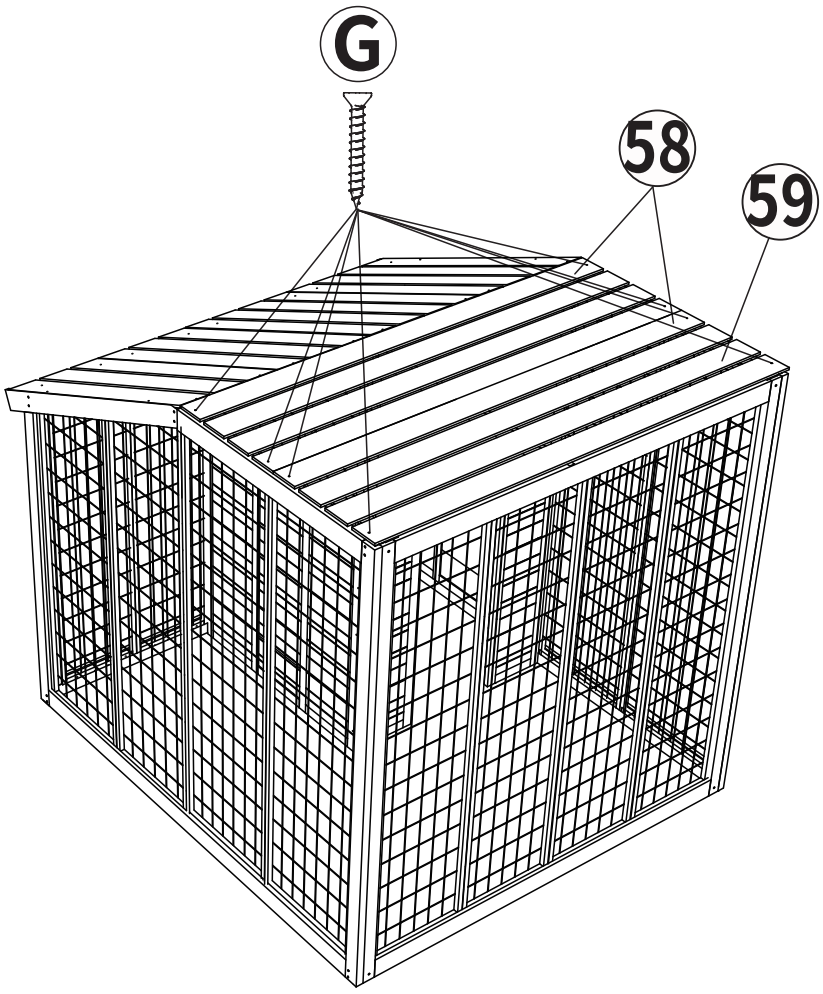

46

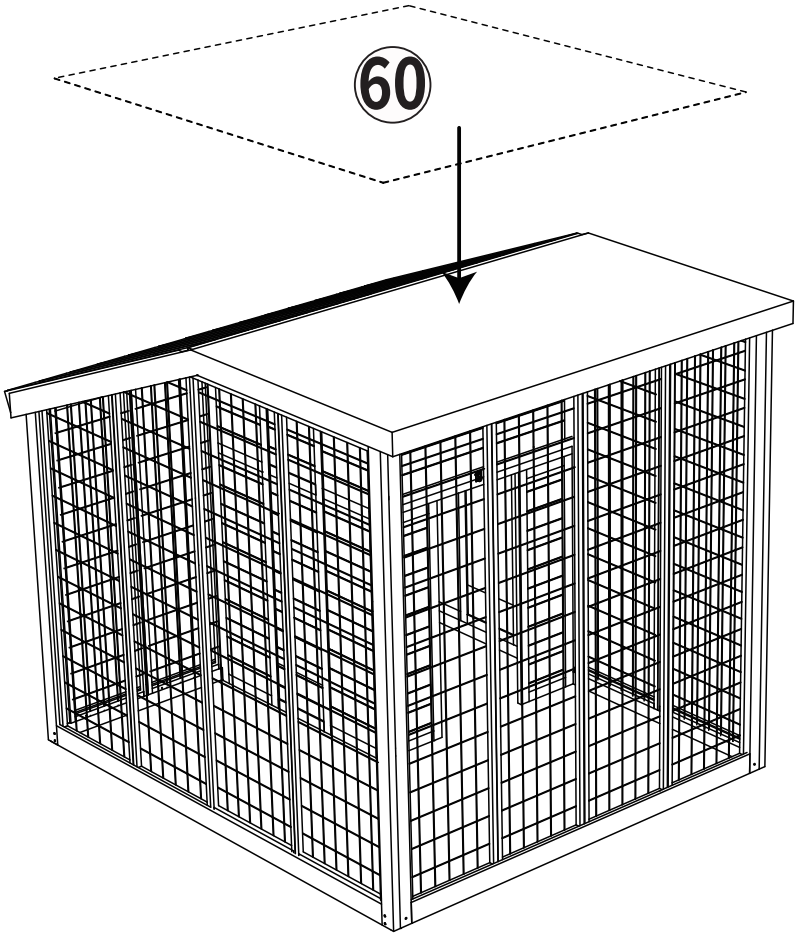

47

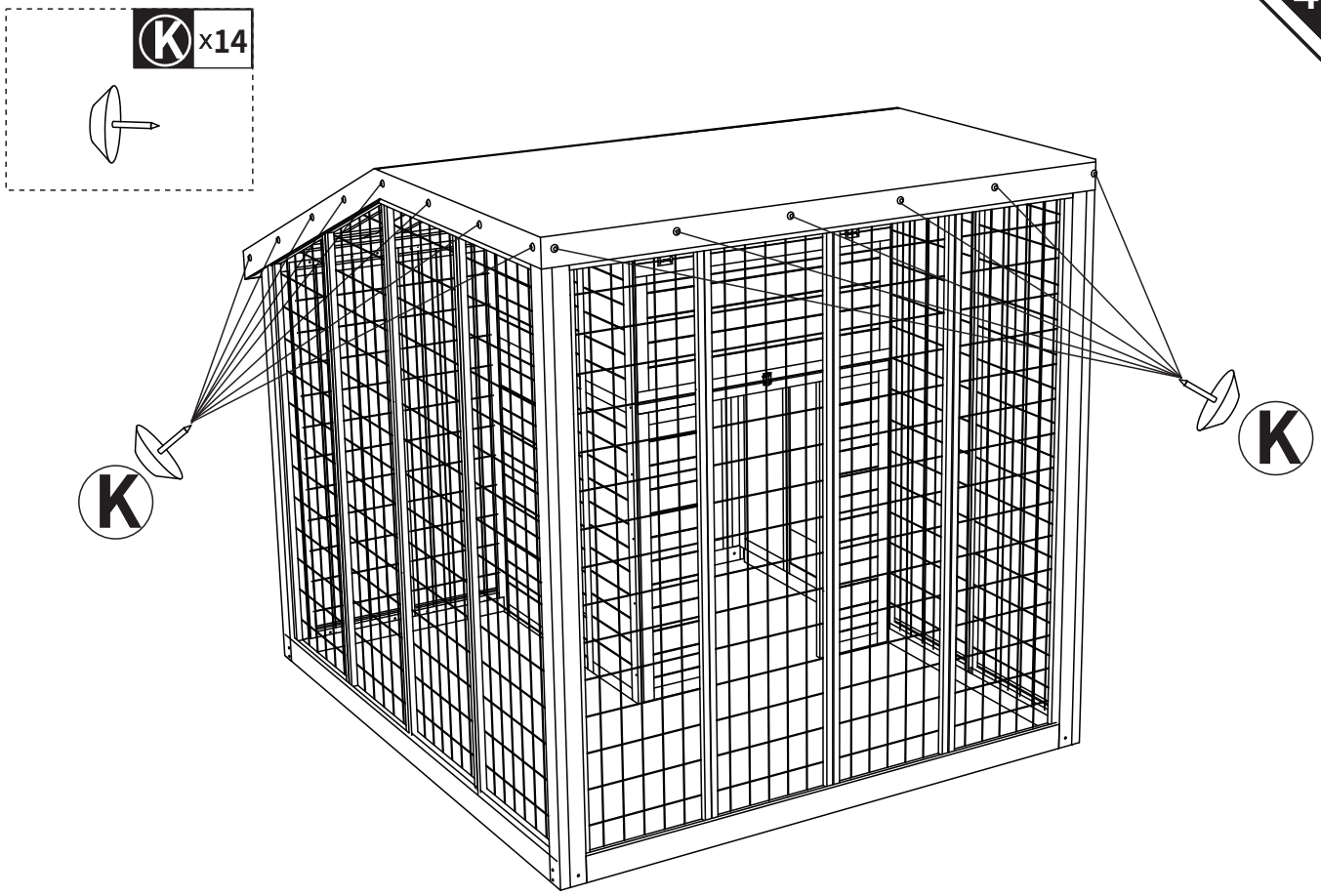

Done

