Brio®

Point of Use Water Dispenser

Setup Manual

Model No.: CLPOU720UVRO4

Table of Contents

Safety Information 3

Intended Use 3

Product Features 4
- Product Dimensions 4
- Touch Panel Description 5

Package Contents 5

Materials Needed 5

Installation 6
- Determine Installation Location 6
- Connect to the Cold Water Supply 6
- Make the Reverse Osmosis Waste Connections 7
- Flush the Filters 8
- Install the Filters and Complete the Installation 9

Operation 10
- Turn the Dispenser On/Off 10
- Set the Clock 10
- Set the Cold Temperature Setting 10
- Set the Hot Temperature Setting 10
- Dispense Cold Water 10
- Dispense Hot Water and Activate Child Safety Lock 11

Troubleshooting 11

Cleaning and Maintenance 12
- Care and Maintenance 12
- Filter Replacement Schedule 13
- Replace the Filters 13
- Filter Specifications 13

Warranty 14

Safety Information

WARNING: To reduce risk of injury and property damage, you must read this entire guide before assembling, installing and operating the dispenser.

WARNING: This product dispenses water at very high temperatures. Failure to use properly can cause personal injury. When operating this dispenser, always exercise basic safety precautions, including the following:

- Prior to use, this dispenser must be properly assembled and installed in accordance with this manual.
- For indoor use only. Keep the water dispenser in a dry place away from direct sunlight. Do NOT use outdoors.
- Install and use only on a hard, flat and level surface.
- Do NOT place the water dispenser in an enclosed space or cabinet.
- Do NOT operate the dispenser in the presence of explosive fumes.
- Use only properly grounded outlets.
- Do not use an extension cord.
- Always grasp the plug and pull straight out from the outlet. Never unplug by pulling on the power cord.
- Do NOT use the dispenser if the cord becomes frayed or otherwise damaged. If the supply cord is damaged, it must be replaced by the manufacturer, its service agent or similarly qualified persons in order to avoid a hazard.
- To protect against electric shock, do NOT immerse cord, plug, or any other part of the dispenser in water or other liquids.
- Ensure the water dispenser is unplugged prior to cleaning.
- Never allow children to dispense hot water without proper and direct supervision. Unplug the unit to prevent unsupervised use by children.
- Service should be performed only by a certified technician.
- The appliance must not be cleaned by a water jet and is not suitable for installation in an area where a water jet could be used.

WARNING: Keep ventilation openings, in the appliance enclosure or in the built-in structure, clear of obstruction.

WARNING: Do not use mechanical devices or other means to accelerate the defrosting process, other than those recommended by the manufacturer.

- This appliance should work under environment of temperatures from 4°C~40°C (39°F~104°F) and humidity ≤90%.
- Never turn the machine upside down or lean it more than 45°.
- After turning the dispenser off, allow the dispenser to sit idle for 3 minutes before turning on again.

Intended Use

This appliance is intended to be used in household and similar applications such as:

- Staff kitchen areas in shops, offices and other working environments
- Farm houses
- Clients in hotels, motels and other residential type environments
- Bed and breakfast type environments
- Catering and similar non-retail applications

This appliance is not intended for use by persons (including children) with reduced physical, sensory or mental capabilities, or lack of experience and knowledge, unless they have been given supervision or instruction concerning use of the appliance by a person responsible for their safety.

Product Features

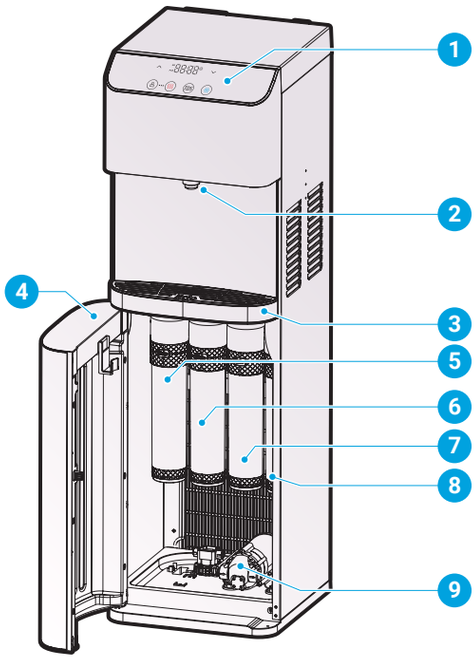

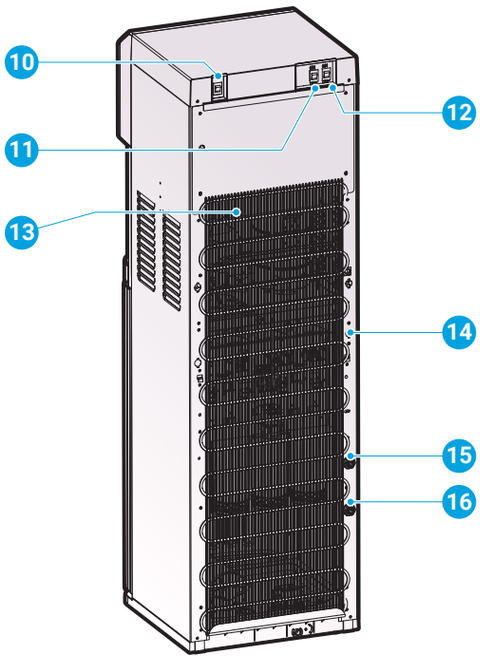

Part	Description
1	Touch panel display
2	Water tap
3	Drip tray
4	Filter cabinet
5	Sediment filter
6	Carbon block filter
7	Reverse Osmosis (RO) filter
8	Post carbon filter

Part	Description
9	RO pump
10	Filter reset switch
11	Cold water switch
12	Hot water switch
13	Condenser
14	Drain outlet
15	RO water inlet
16	Water outlet

Product Dimensions

Height	Width	Depth
104.4 cm (41.1 in.)	31.1 cm (12.2 in.)	35.4 cm (14.0 in.)

Touch Panel Description

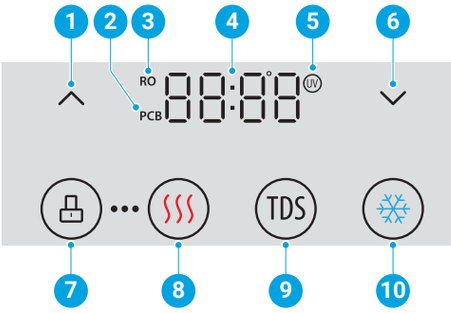

1. Up arrow button – Press to set the time on the clock and increase temperature settings.
2. PCB indicator – Indicates the PP+C1+C2 filter lifetime.
3. RO indicator – Indicates the RO filter lifetime.
4. Clock/Temperature display – Shows the time and water temperature setting when setting the temperature of the hot or cold water. Also indicates when a water bottle needs to be replaced and when the dispenser is in self-cleaning mode.
5. UV indicator – Indicates when dispenser is self cleaning.
6. Down arrow button – Press to set the time on the clock and decrease temperature settings.
7. Lock button – Press to lock the hot water button and to confirm temperature and time settings.
8. Hot water button – Press to dispense hot water.
9. Cold water button – Press to dispense cold water.
10. TDS button – Press to check the total dissolved solids (TDS) of the water. This indicator light is always on. The TDS displays for 2 seconds before water enters the system and then displays another 2 seconds when the water exits.

Package Contents

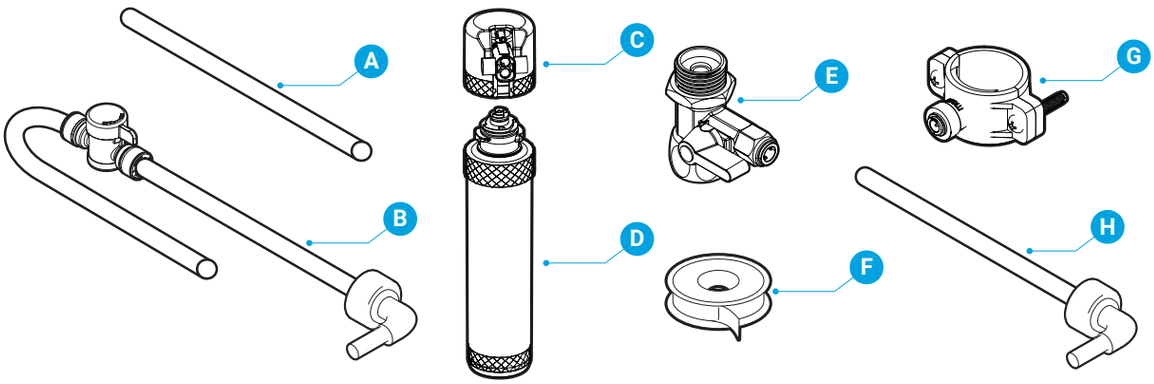

Part	Description	Quantity
A	Filter flushing tube	1
B	Shut-off valve tube (7 ft.)	1
C	Filter housing (for filter flushing)	1
D	Filters	4

Part	Description	Quantity
E	Feed water adapter (with extra nut)	1
F	Plumber's tape	1
G	Drain saddle with foam gasket	1
H	RO water outlet tube	1

Materials Needed

Wrench

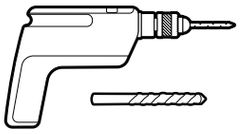

Electric drill with 1/4 in. drill bit

Brio

Installation

1. Determine Installation Location

A. Place the dispenser upright.

B. Locate the dispenser on a hard and level surface in a cool shaded location near a grounded wall outlet.

NOTICE: Do NOT plug in the power cord until the entire installation section is completed.

C. Position the back of the dispenser no closer than 20 cm (8 in.) from a wall and permit free airflow between the wall and water dispenser.

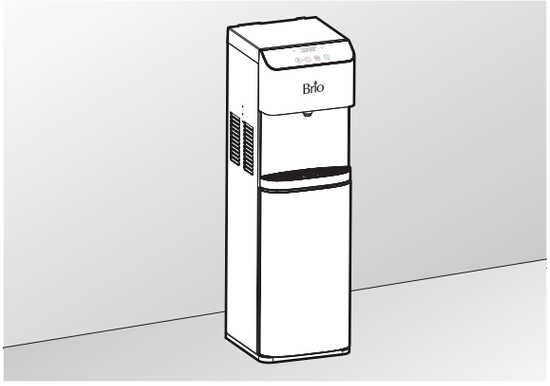

2. Connect to the Cold Water Supply

CAUTION: DO NOT CONNECT THIS WATER LINE TO A HOT WATER SUPPLY LINE. The water supply to the unit MUST be from the COLD WATER LINE. Using HOT WATER will severely damage your filters.

A. Turn off and then disconnect the current cold water supply line.

B. Connect the feed water adapter (E) to the cold water supply line.

C. Connect the cold water supply line on top of the feed water adapter (E).

NOTE: An extra adapter nut is included on top of the feed water adapter (E) to attach to a 3/8 in. or 1/2 in. feed plumbing line.

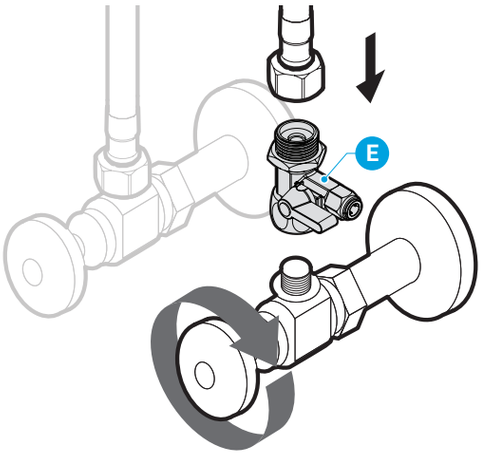

D. Insert the shut-off valve with tube (B) straight into the quick connector piece of the feed water adapter (E).

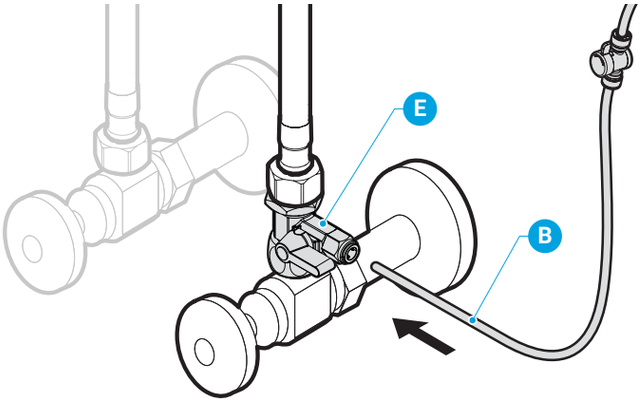

E. Gently tug on the tube (B) to ensure a secure connection with the feed water adapter (E).

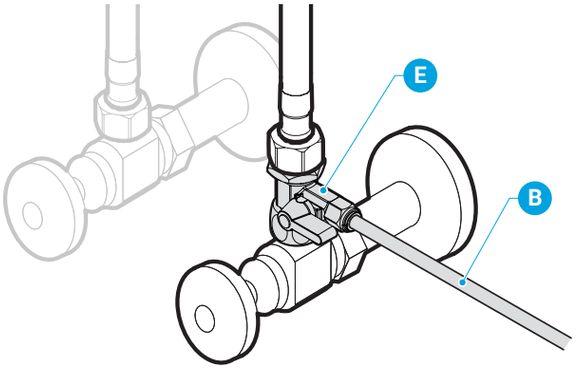

3. Make the Reverse Osmosis Waste Connections

The “RO” filter assembly requires a drain line connection to be installed, which removes rejected water to the sewer. The drain saddle connects the drain line from the dispenser to your drain pipe. The drain saddle is designed to fit around a standard 1.5 in. OD (outer diameter) drain pipe.

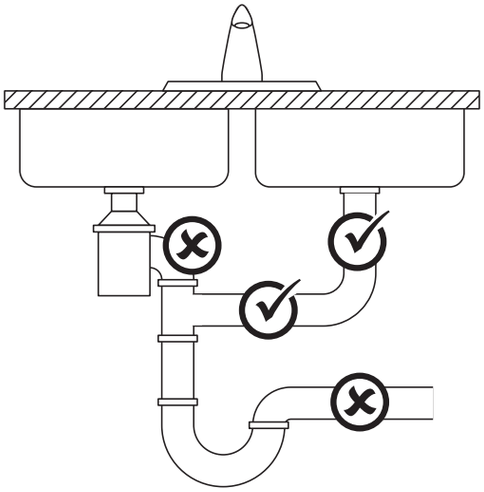

✓ Always install the drain saddle before the P-trap and on a straight vertical or horizontal section of the pipe.

✗ To avoid clogging the drain line with debris, do not install the drain saddle after the drain pipe meets a garbage disposal or dishwasher drain.

To make the Reverse Osmosis (RO) drain connections:

A. Determine the location for your drain saddle (G) and then make a mark on the drain pipe for the opening (1).

B. Use your drill and a 1/4 in. drill bit to drill a hole at the mark, ensuring you only drill through one side of the drain pipe.

C. Find the half of the drain saddle (G) with the hole in the center, remove the backing from the foam gasket, align the gasket with the hole on the drain saddle (G), and stick the adhesive side of the gasket to the drain saddle (G).

D. Position both halves of the drain saddle (G) on the drain pipe with the saddle’s opening aligned over the drilled hole, and insert your drill bit through the saddle (G) and drilled hole to ensure proper alignment.

E. Secure both ends of the drain saddle (G) together using the bolts and nuts, but do not over-tighten.

F. Connect the RO water outlet tube (H) to the drain saddle (G). To prevent water leakage, ensure the RO water outlet tube (H) has been placed 0.6 inches in the pipe.

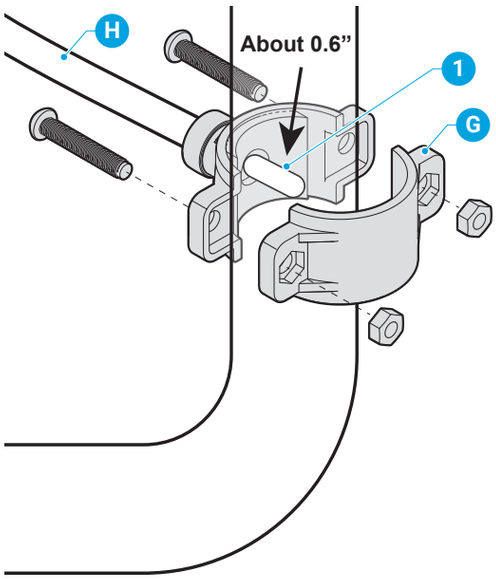

4. Flush the Filters

IMPORTANT: Follow this procedure every time you replace your filters.

IMPORTANT: Ensure the water supply is off before you begin.

A. Connect a filter (D) to the filter housing (C) by twisting the filter (D) clockwise.

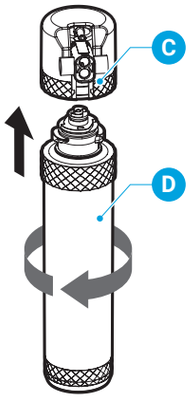

B. Connect the tip of the shut-off valve tube (B) to the left side of the filter housing (C).

C. Connect the filter flushing tube (A) to the right side of the filter housing (C) and lay the open end of the filter flushing tube (A) over a sink or receptacle to collect water.

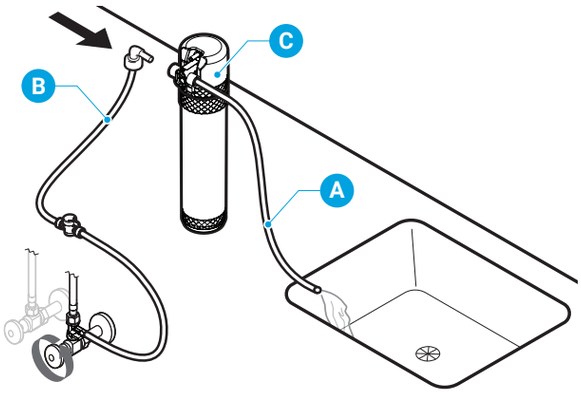

D. Flush each filter for a minimum of 5 minutes. The recommended rate is 1.5-3 gallons of water (about 10 minutes) or until the water is clear in appearance.

E. Shut off the valve at the water source and remove the filter housing from the tube (B).

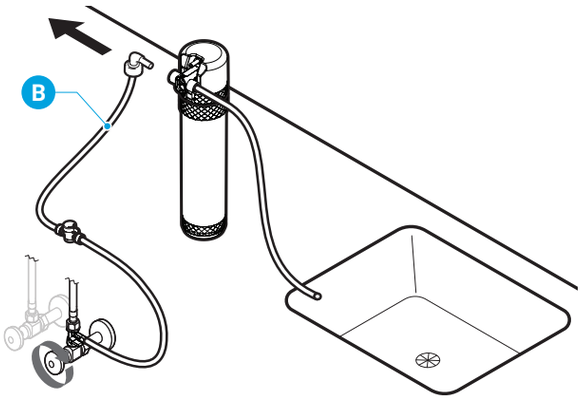

5. Install the Filters and Complete the Installation

A. After flushing, twist each filter (D) clockwise into the filter housings located inside the dispenser cabinet. The sediment filter goes on the left, followed by the carbon, RO, and post carbon filter.

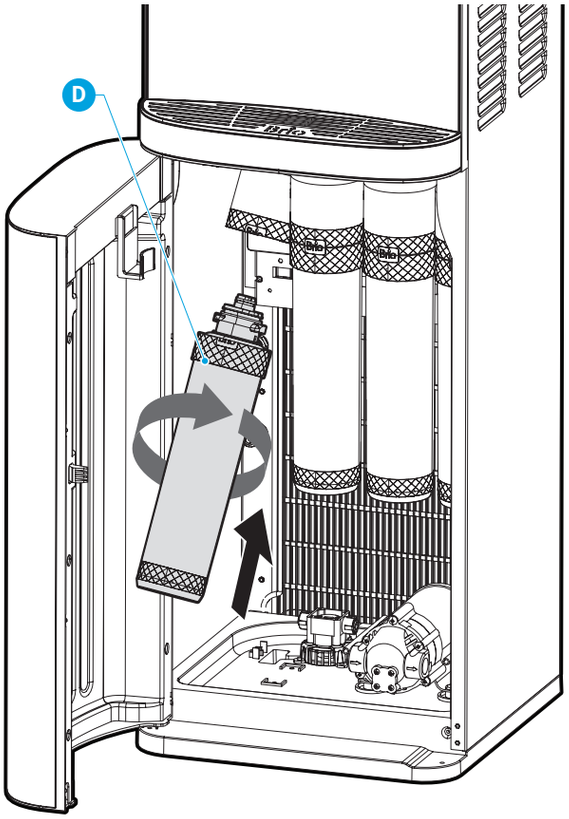

B. Remove the safety plug from the water inlet hole on the back of the dispenser by pushing in the inlet hole collar and then gently pulling out the plug.

C. Connect the RO water outlet tube (H) from the RO drain saddle (G) to the RO water outlet.

D. Connect the tip of the shut-off valve tube (B) into the water inlet hole on the back of the dispenser. Then turn on the main water supply and ensure the valve in the tube (B) is on.

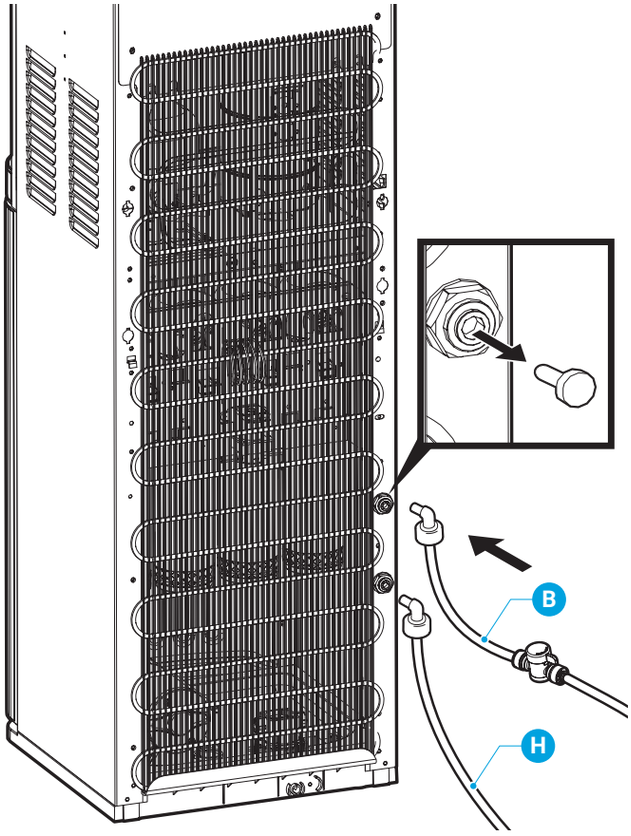

Operation

IMPORTANT: This unit has been tested and sanitized prior to packing and shipping. During transit, dust and odors can accumulate in the tank and lines. Dispense and dispose at least one quart of water prior to drinking any water.

Turn the Dispenser On/Off

IMPORTANT: Before you activate the hot and cold switches, ensure water has filled the tanks inside the dispenser in order to prevent dry heating.

1. Plug in the dispenser and turn the On/Off switch to On.
2. Run water through the cold and hot water taps until water begins to dispense.
3. To power on the cooling system, flip the cooling switch to the On position.
4. To power on the heating system, flip the heating switch to the On position.

Set the Clock

1. Press and hold the up and down arrow buttons for 3 seconds until the clock display begins to blink.
2. Press the cold water button to set the minute and the hot water button to set the hour. Use the up and down arrow buttons to scroll until the correct minute/hour is displayed.
3. Press the hot water lock button when finished.

Set the Cold Temperature Setting

1. Press and hold the down arrow button for 3 seconds until the cold water button starts to blink and the current cold water temperature appears on the display.
2. Use the up and down arrow buttons to scroll to your desired cold water temperature. The range is 39 to 59 (4˚C to 15˚C).
3. Press the lock button when finished. The temperature stops blinking and the time is displayed.

Set the Hot Temperature Setting

1. Press and hold the up arrow button for 3 seconds until the hot water button starts to blink and the current hot water temperature appears on the display.
2. Use the up and down arrow buttons to scroll to your desired hot water temperature. The range is 174˚F to 194˚F (79˚C to 90˚C).
3. Press the lock button when finished. The temperature stops blinking and the time is displayed.

Dispense Cold Water

NOTE: Water will take approximately 1 hour after plugging in and turning on to become completely chilled.

1. Place a drinking glass or container under the tap and press the cold water button to dispense cold water or the ambient water button to dispense room temperature water.
2. Release the button when your container is full.

Dispense Hot Water and Activate Child Safety Lock

CAUTION: This unit dispenses water at temperatures that can cause severe burns. Avoid direct contact with hot water. Keep children and pets away from the unit while dispensing. Never allow children to dispense hot water without proper and direct supervision. Disable the heating feature by switching the heating convenience switch to the Off position.

NOTE: Water will take approximately 15-20 minutes after plugging in and turning on to reach its hottest temperature.

1. This water dispenser is equipped with a child safety feature in order to prevent inadvertent dispensing. To disable the child safety lock feature, press the lock button.
2. To dispense hot water, place a drinking glass or container under the tap and press the hot water button.
3. Release the button when your container is full.

Troubleshooting

Problem	Solution
The cold water is not cold.	• It takes up to one hour after setup to dispense cold water. • Make sure the power cord is properly connected to a working outlet. • Make sure the back of the dispenser is at least 20 cm from a wall and there is free airflow on all 20 cm sides of the dispenser. • Make sure green power switch on back of dispenser is On. • If water still isn't cold, call customer service at +1 844-257-4103 for assistance.
The hot water is not hot.	• It takes 15-20 minutes after setup to dispense hot water. • Make sure the power cord is properly connected to a working outlet. • Make sure red power switch on back of dispenser is On.
The dispenser is noisy.	• Ensure the dispenser is located on a level surface. • The heating tube may be generating a slight noise. This is normal.
There is water leakage.	If the 3 lights are flashing, a leak was detected. • The pipe is not connected properly. Check all water connections and tubes to ensure everything is connected properly. • The water and PE pipes have burst. Replace the water and PE pipe.
The machine is not dispensing water.	• The dispenser has become too cold and the lines are blocked by ice. Turn the cooling switch off for at least 4 hours to allow the water in the lines to thaw.

Cleaning and Maintenance

The UV icon on the upper-right corner of the display will begin blinking, indicating the cleaning process is underway.

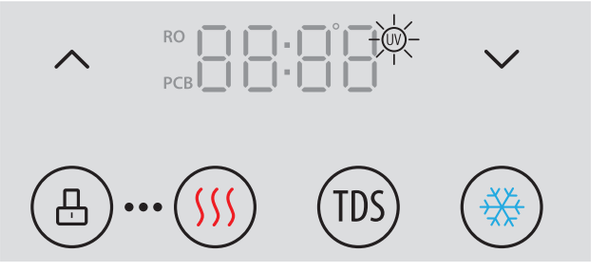

Care and Maintenance

- Keep this dispenser in a dry and cool place and avoid direct sunshine.
- Ensure the back of the dispenser is at least 20 cm (8 in.) away from the wall.
- Never put the dispenser on paper or foam, which may store water and then cause creepage. Never put anything flammable beside this machine.
- Do not use the dispenser outdoors or in a place that can be splashed by water.
- If the dispenser is not in use for longer than a 24-hour period, turn off the heating switch or the refrigerating switch to save power and drain any remaining water.
- Empty and clean the drip tray, grid and float as needed.
- Periodically check the filter reset switch (19) on the back of the dispenser to ensure your filter is changed every 6 to 12 months, depending on how heavily the unit is used. This switch will flash red when it is time to change your filter.

Filter Replacement Schedule

Filter Type	Replacement Schedule	Function
Sediment	6 months or 950 gallons	Performs a coarse filtration of original water. Removes mud, sand, iron, rust, suspensions and impurities.
Pre-Carbon	6 months or 950 gallons	Reduces chlorine, taste and odor, lead and cysts.
Reverse Osmosis (RO)	6 months or 1,900 gallons	Removes up to 99% of contaminants including arsenic, lead, fluoride, heavy metals and more.
Post Carbon	6 months or 950 gallons	Taste and impurity removal.

Replace the Filters

IMPORTANT: Only replace the filters with new filters designed for this dispenser. Any other type of filter will damage the machine and void any warranty.

When a filter is approaching the end of its life, the filter reset switch (13) flashes red. To change filters:

1. Shut off the water supply.
2. Remove the old filters and replace with new filters. Ensure the sediment filter is on the left and the carbon block filter is on the right.
3. To flush your new filters, follow the instructions in Step 5 - Flush the Filters and Complete the Installation.
4. Press and hold the filter reset switch (19) until the red indicator light turns off to reset the internal timer.

Filter Specifications

Sediment Filter
(Sediment, Dirt and Rust Removal)

Filter Capacity	950 Gallons
Flow Rate	0.8 GPM
Suggested PSI	14.5 - 58 psi
Temperature	33 - 100 °F

Pre-Carbon Filter
(Chlorine, Taste and Odor Reduction)

Filter Capacity	950 Gallons
Flow Rate	0.8 GPM
Suggested PSI	14.5 - 58 psi
Temperature	33 - 100 °F

RO Filter
(Reduce Impurities to 0.0001 Micron)

Filter Capacity	1,900 Gallons
Flow Rate	0.035 GPM
Suggested PSI	58 - 116 psi
Temperature	33 - 100 °F

Post Carbon Filter
(Taste and Impurity Removal)

Filter Capacity	950 Gallons
Flow Rate	0.8 GPM
Suggested PSI	14.5 - 58 psi
Temperature	33 - 100 °F

Warranty

Brio ("Vendor") warrants to the original purchaser of the Brio Water Coolers (the "Product"), and to no other person, that if the Product is assembled and operated in accordance with the printed instructions accompanying it, then for a period of one (1) year from the date of purchase, all parts in the Product shall be free from defects in material and workmanship. This Limited Warranty shall be limited to repair or replacement of parts, which prove defective under normal use and service and which Vendor shall determine in its reasonable discretion upon examination to be defective. To take advantage of this Limited Warranty, please follow these steps:

1. Please retain your sales slip or invoice, as Vendor may require reasonable proof of your date of purchase.
2. Contact Vendor's Customer Service Department using the contact information listed below.
3. Return parts to Vendor, per Vendor's instructions, at your cost and expense.
4. Upon receipt by Vendor, Vendor shall advise you in writing whether a defect covered by this Limited Warranty exists in any returned part and whether your claim has been approved or denied.
5. Upon Vendor's approval of your claim, Vendor will replace such defective part without charge to you.

WHAT THIS LIMITED WARRANTY DOES NOT COVER: This Limited Warranty does not cover any failures or operating difficulties of the Product due to accident, abuse, misuse, alteration, misapplication, improper installation or improper maintenance or service by you or any third party, or failure to perform normal and routine maintenance on the Product, as set out in the User's Manual. In addition, this Limited Warranty does not cover damages to the finish, such as scratches, dents, discoloration or rust after purchase.

This Limited Warranty is the only express warranty given on the Product and is in lieu of all other express warranties. Vendor disclaims all warranties for products that are purchased from seller other than authorized retailers or distributors. THIS LIMITED WARRANTY RESTRICTS THE DURATION OF ANY AND ALL IMPLIED WARRANTIES, INCLUDING WITHOUT LIMITATION, THE IMPIED WARRANTY OF MERCHANTABILITY AND FITNESS FOR A PARTICULAR PURPOSE TO THE ONE (1) YEAR TERM OF THIS LIMITED WARRANTY. UPON THE EXPIRATION OF THE ONE (1) YEAR TERM OF THIS LIMITED WARRANTY, VENDOR DISCLAIMS ANY AND ALL IMPLIED WARRANTIES, INCLUDING WITHOUT LIMITATION THE IMPLIED WARRANTIES OF MERCHANTABILITY AND FITNESS FOR A PARTICULAR PURPOSE, THE PRODUCT BEING THUS SOLD AS-IS, WITH ALL FAULTS. FURTHER, VENDOR SHALL HAVE NO LIABILITY WHATSOEVER TO PURCHASER OR ANY THIRD PARTY FOR ANY SPECIAL, INDIRECT, PUNITIVE, INCIDENTAL, OR CONSEQUENTIAL DAMAGES. OTHER THAN THIS LIMITED WARRANTY, THERE ARE NO WARRANTIES WHICH EXTEND BEYOND THE DESCRIPTION ON THE FACE HEREOF. Vendor assumes no responsibility for any defects caused by third parties. This Limited Warranty gives you specific legal rights, and you may have other rights which vary from state to state. State law may also override statements in this Limited Warranty regarding the restriction on the duration of implied warranties. Some jurisdictions do not allow exclusion or limitation of special, incidental or consequential damages, or limitations on how long a warranty lasts, so the above exclusion and limitations may not apply to you.

Brio®

Contact Us

Call: +1 844-257-4103

©2020 DTWUSA