Shampoo Chair

OWNER'S MANUAL

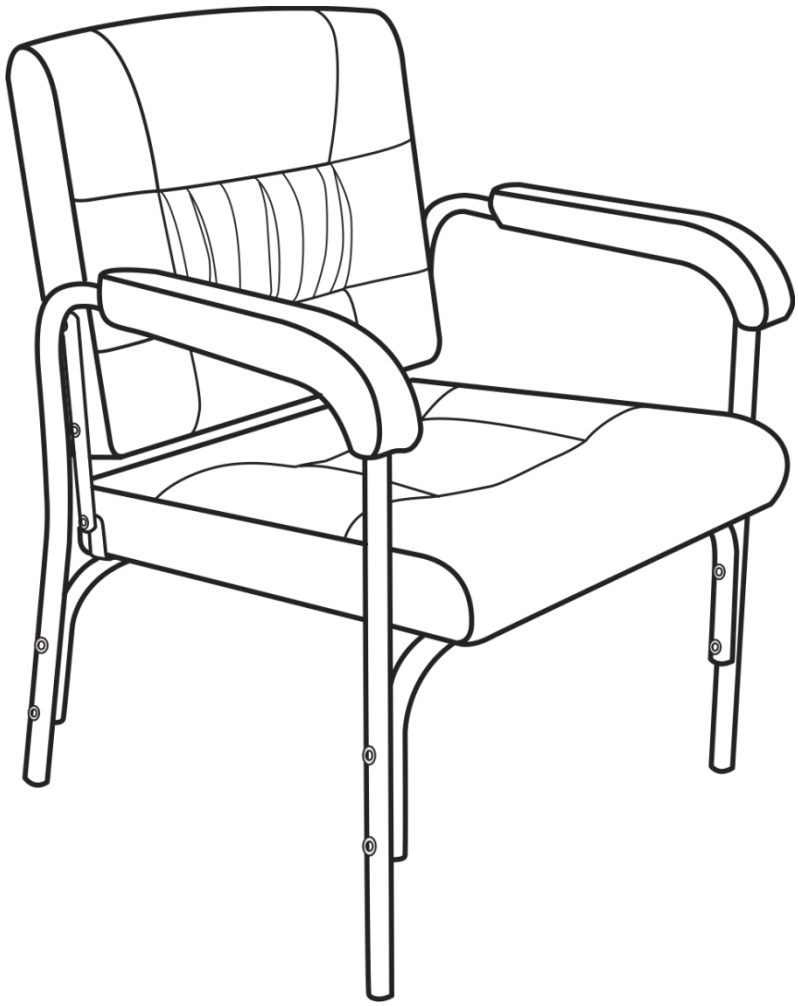

CAUTION! Please read through this manual before assembling, installing or using the product to ensure safe and correct use.

PLEASE DO NOT RETURN TO STORE



Please do not return this product to the retailer!!

We are able to assist you in ANY way

If you find that you have any trouble with assembly or missing or damaged parts please contact the seller.

Table of Contents

Main Parts----------03

Preinstalled Accessories----------03

Accessory Kit---------- 03

Installation Diagram ----------04

Instructions for Use ---------- 07

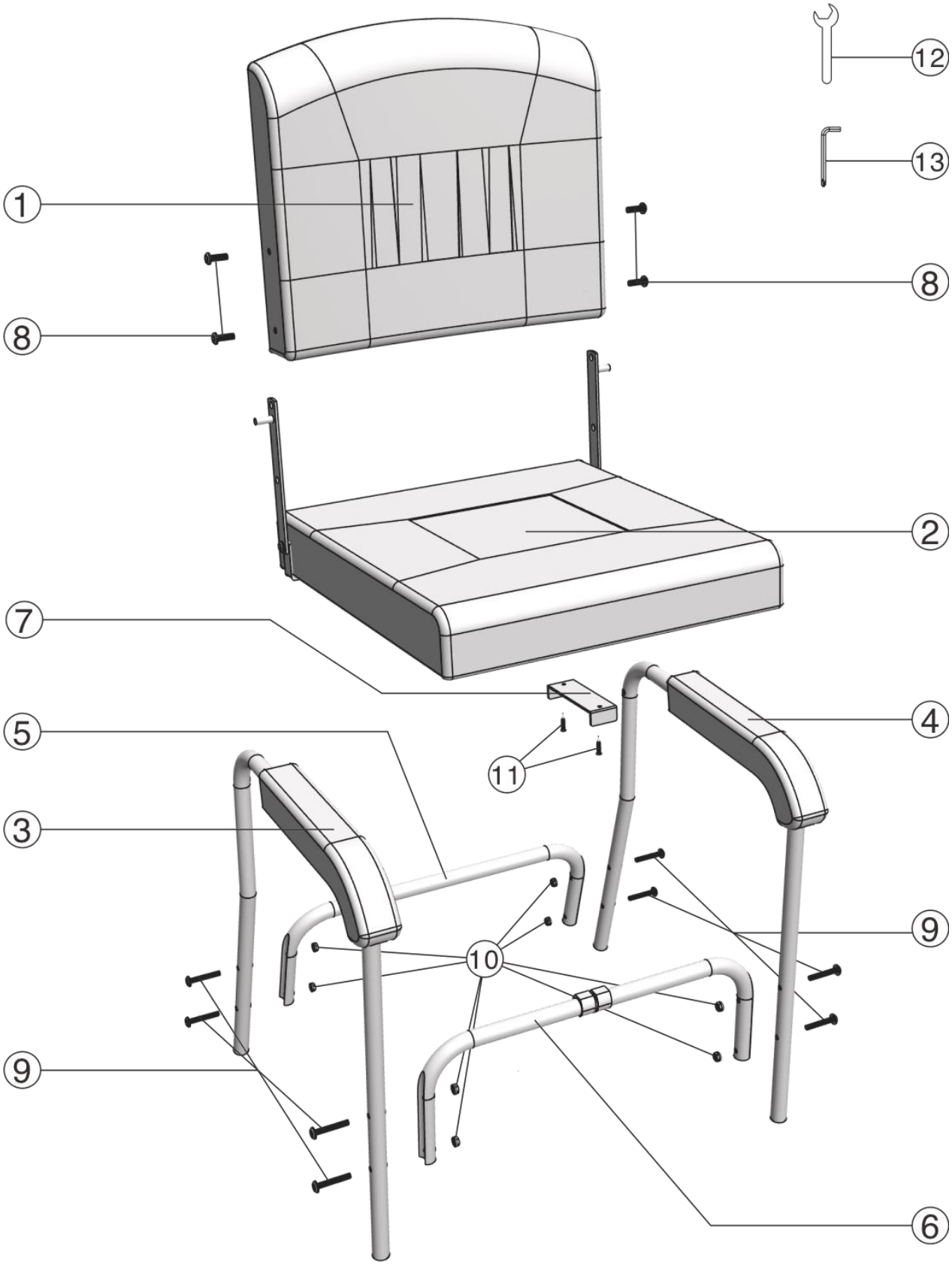
12
13
1
8
8
2
7
4
5
11
3
9
10
9
6

Main Parts

Code	Image	Name	Qty(Pcs)	Code	Image	Name	Qty(Pcs)
1	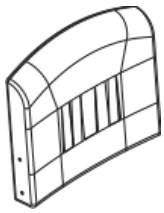	Backrest	1	*2*	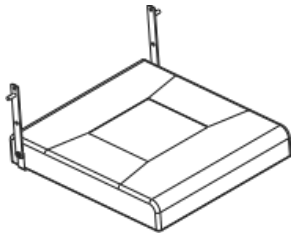	Seat	1
3	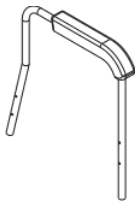	Right Armrest	1	*4*	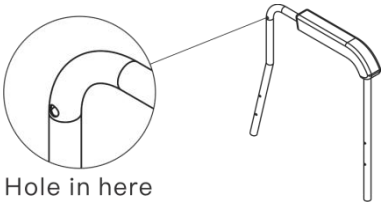	Left Armrest	1
5	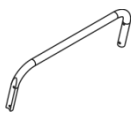	Back Support Rod	1	*6*	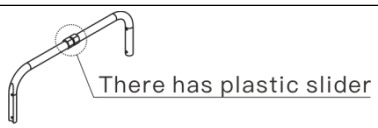	Front Support Rod	1

Preinstalled Accessories

Code	Image	Where to find	Name	Qty(Pcs)
8		Preinstalled on ①	Allen Socket Screw M8*25	4

Accessory Kit *(Packed in a Small Bag)*

Code	Image	Name	Qty(Pcs)	Code	Image	Name	Qty(Pcs)
7	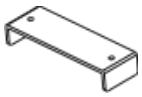	Slide Rail	1	*9*	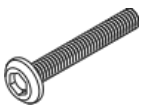	Allen Socket Screw M8*50	8
10		Nut M8	8	*11*		Tapping Screw M4*25	2
12		Wrench 12mm	1	*13*		Allen Key 5mm with Phillips head Screwdriver	1

Installation Diagram

Step One：

Install Slide Rail ⑦ to the back of the Seat ② and secure it with two Tapping Screws ⑪.

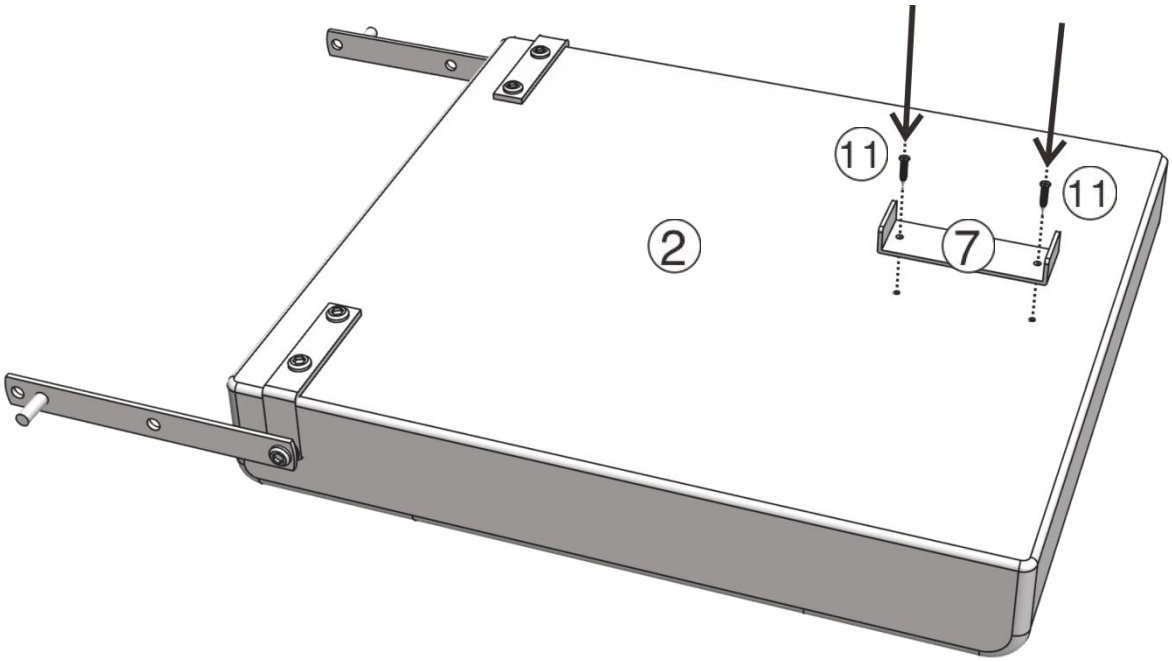

Two Tapping Screws ⑪ and Slide Rail ⑦ were packed in the accessory kit (a small bag).

Step Two：

Unscrew four Allen Socket Screws M8*25 ⑧ from the two side of Backrest ① for later use.

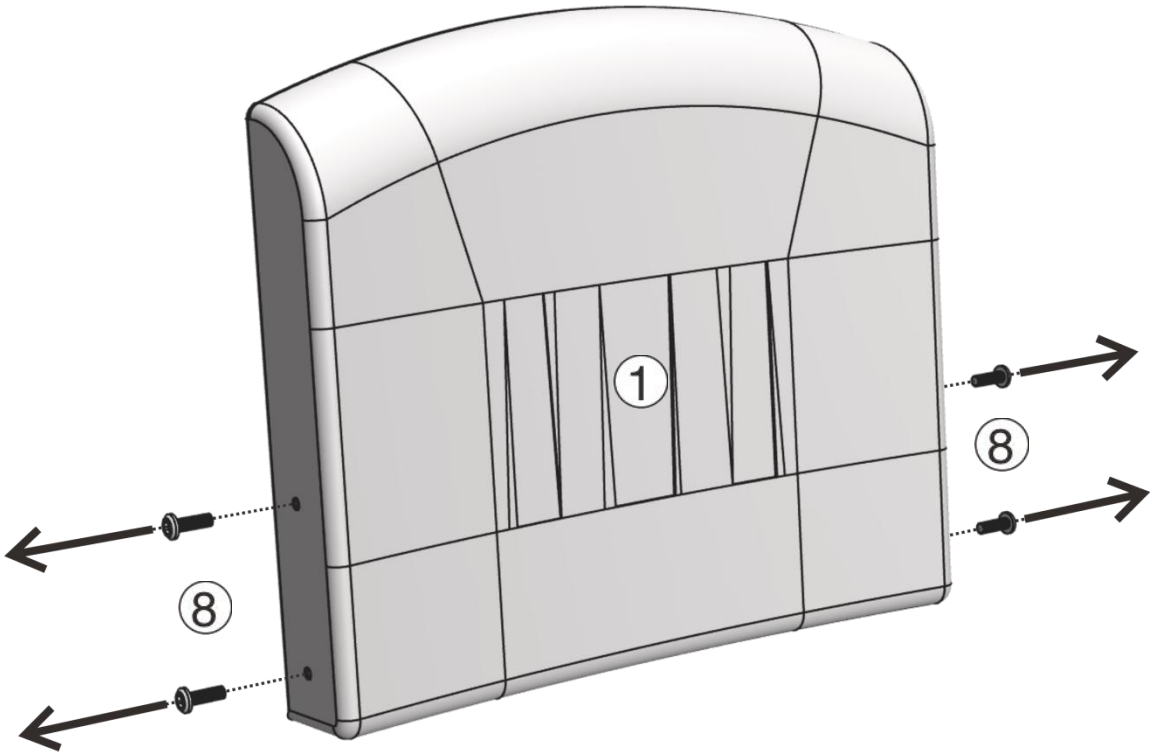

Four Allen Socket Screws M8*25 ⑧ were preinstalled on two side of the Backrest ①.

Step Three：

Connect the Backrest ① and Seat ② and secure with four Allen Socket Screws M8*25 ⑧.

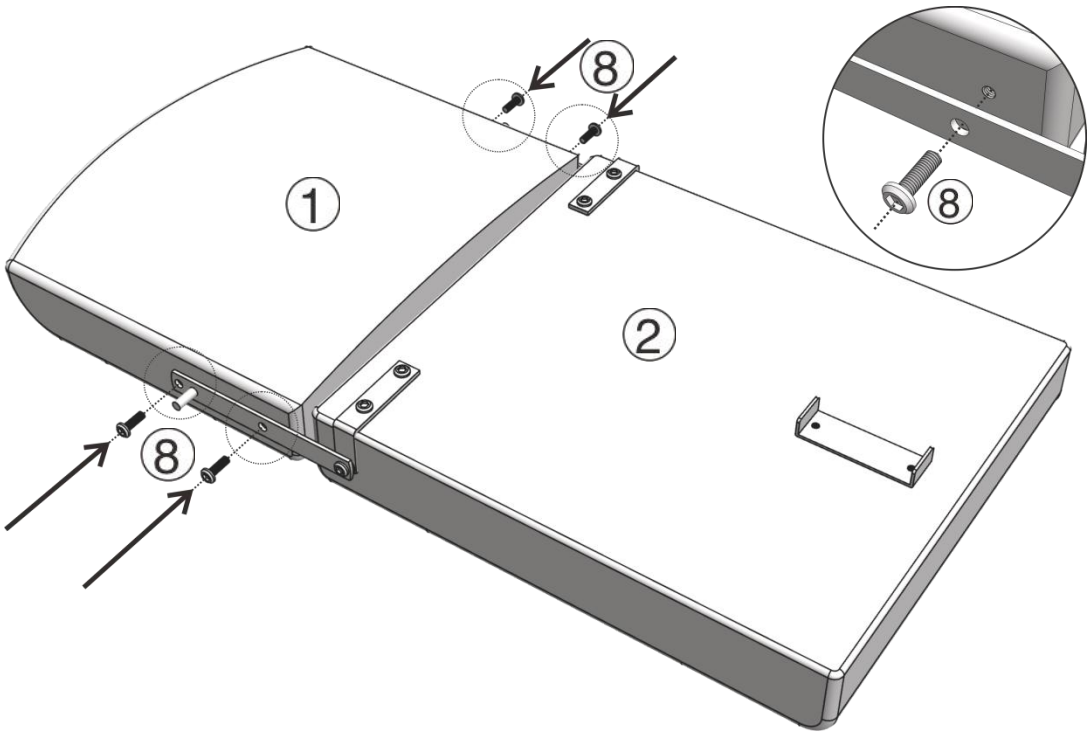

Four Allen Socket Screws M8*25 ⑧ were preinstalled on two side of the Backrest ①.

Step Four：

Connect the Front Support Rod ⑥ and Back Support Rod ⑤ with Left Armrest ④ and fix with four Allen Socket Screws M8*50 ⑨ and Nuts M8 ⑩. **(Don't tighten the screws to the end until Step Seven when chair is on flat).**

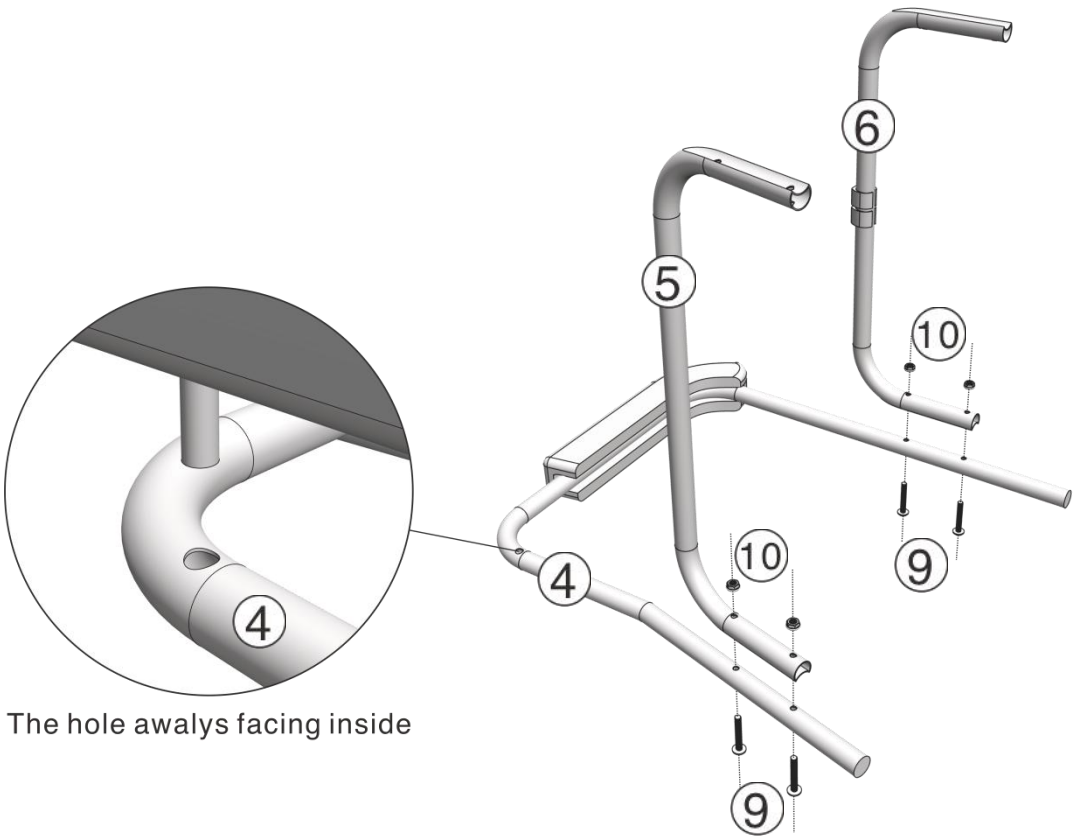

Four Allen Socket Screws M8*50 ⑨ and four Nuts M8 ⑩ were packed in the accessory kit (a small bag).

Step Five：

Combine the Backrest ① and Seat ② to the Left Armrest ④.

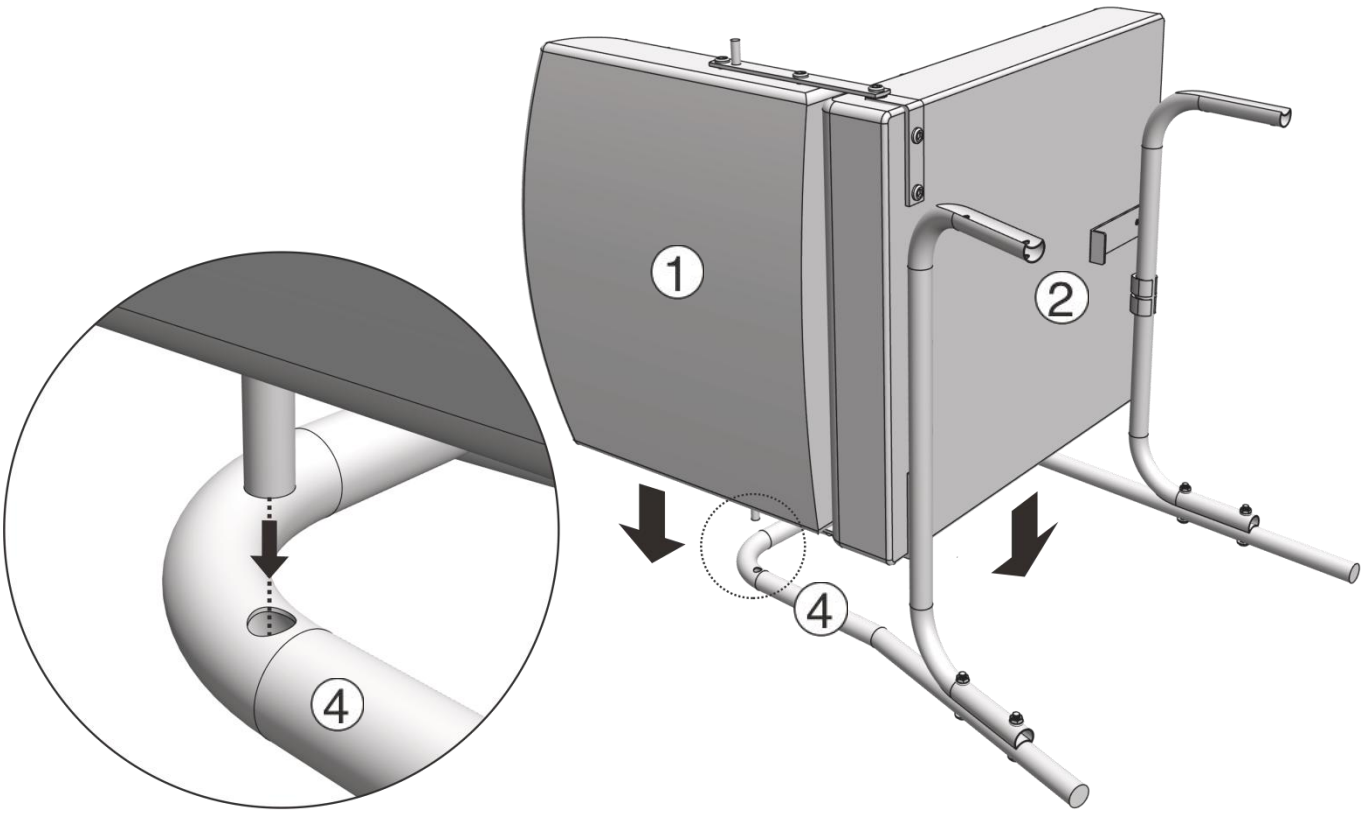

Step Six：

Combine the Right Armrest ③ to the Backrest ① and Front Support Rod ⑥ and Back Support Rod ⑤, and fix with four Allen Socket Screws M8*50 ⑨ and Nuts M8 ⑩. **(Don't tighten the screws and nuts to the end until Step Seven when chair is on flat).**

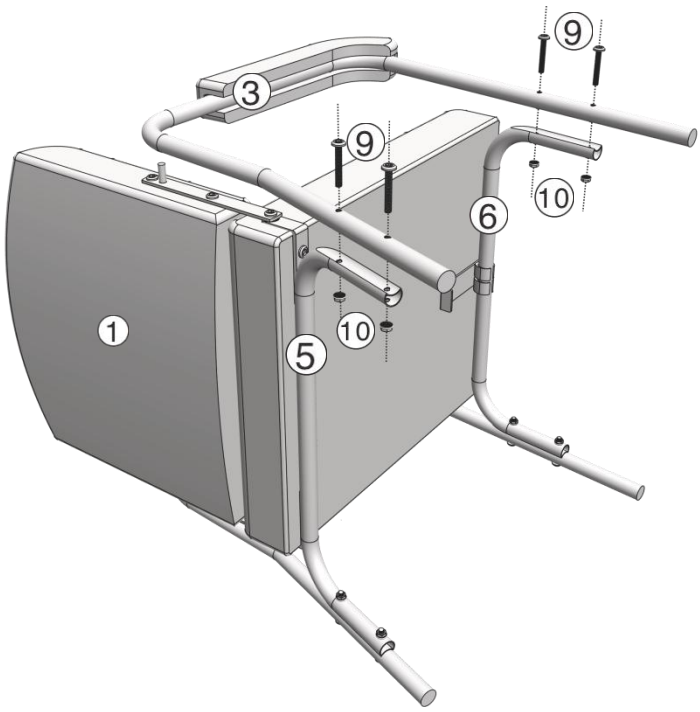

Four Allen Socket Screws M8*50 ⑨ and four Nuts M8 ⑩ were packed in the accessory kit (a small bag).

Step Seven：

Place the chair on flat ground and then tighten all the screws and nuts.

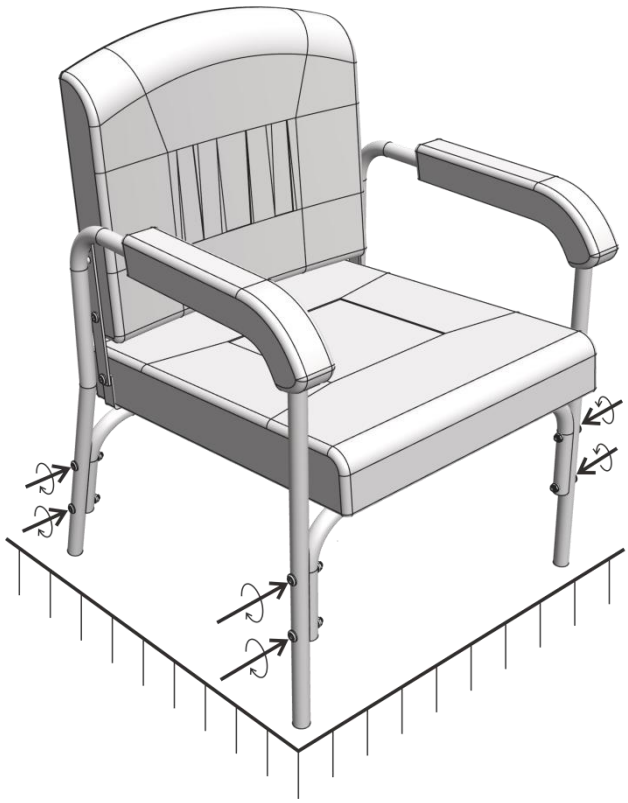

Instruction for use

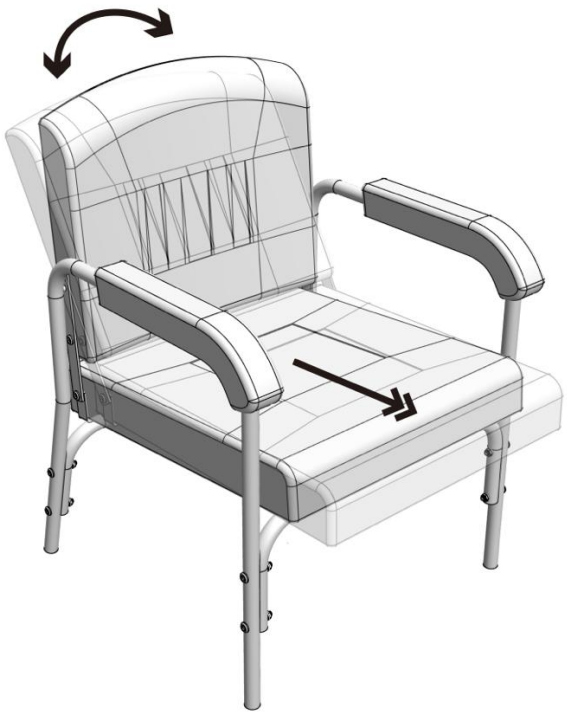

Backrest and seat can be sliding down for shampoo.