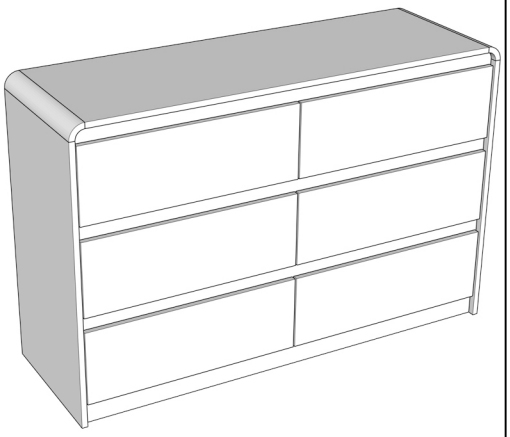

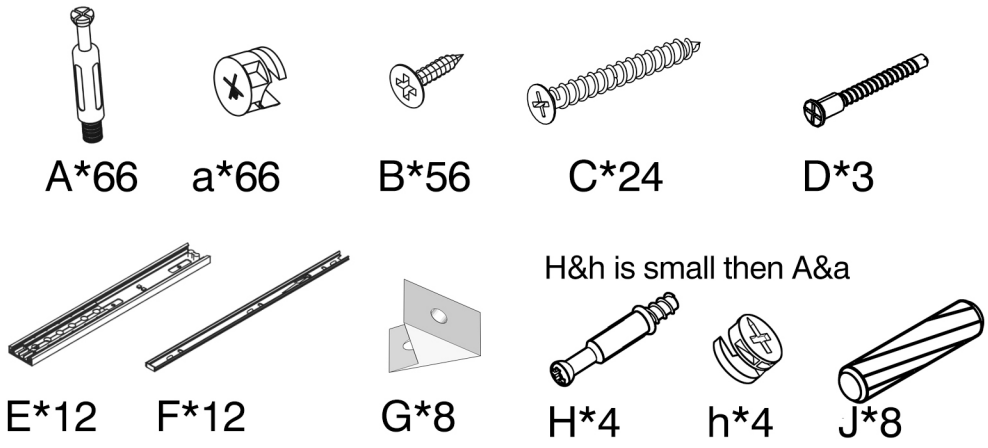

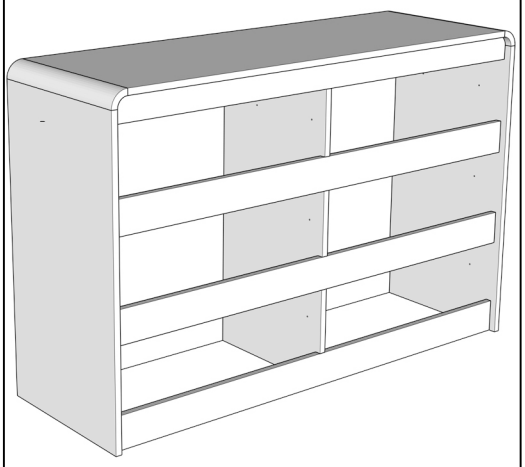

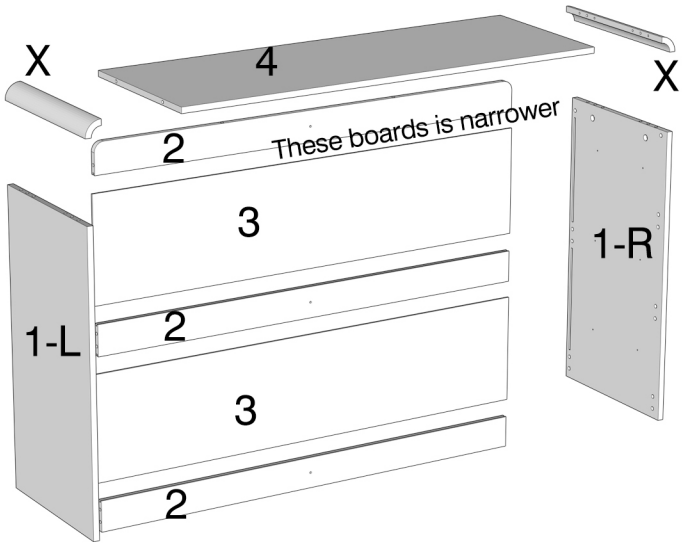

1-L, 1-R: left side plate, right side plate, single-sided screw hole

2: Back reinforcement plate

3: Backplane

4: Top plate

X: Side plate and top plate connection half-round body

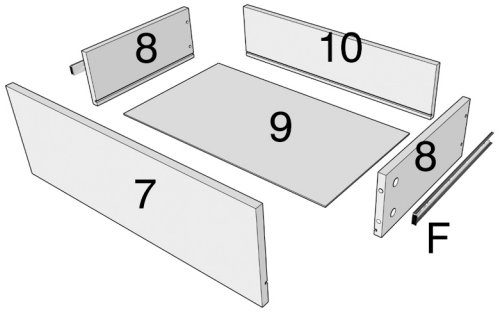

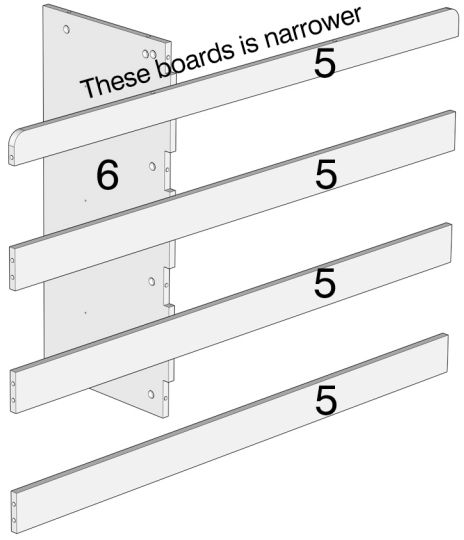

5: Drawer runner board

6: Neutral board

7: Drawer front panel

8: Drawer side panel

9: Drawer bottom board

10: Rear panel of drawer

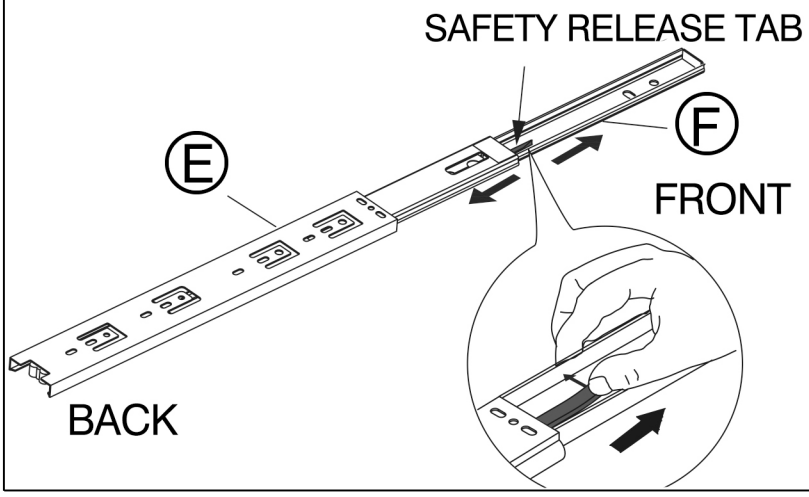

E and F are shipped together to maintain the oil for the ball bearings. Note that you need to tip up the safety release tab to take out the F part prior to assembly

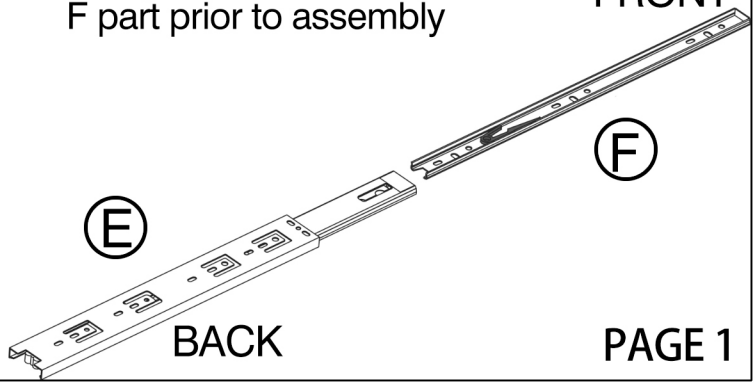

STEP 1

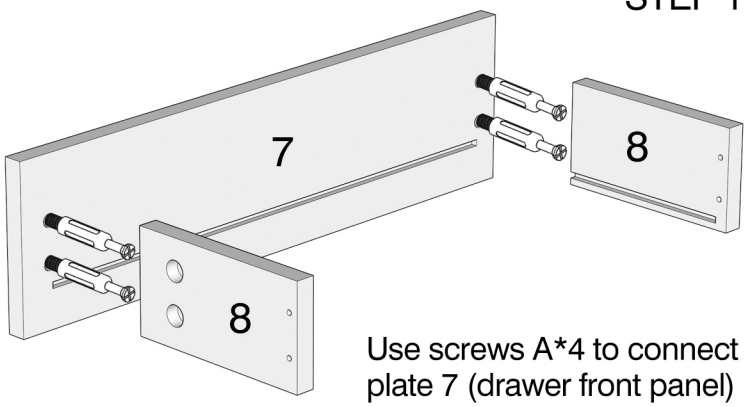

Use screws A*4 to connect plate 7 (drawer front panel) and plate 8 (drawer side panel)

Screw A+a method

After splicing the two boards, the screw a should be turned 180 ° to lock it securely

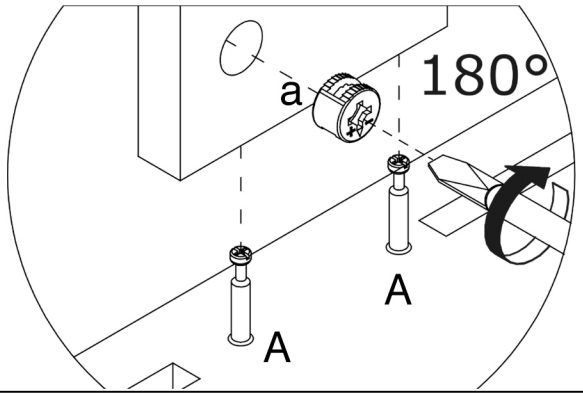

STEP 2

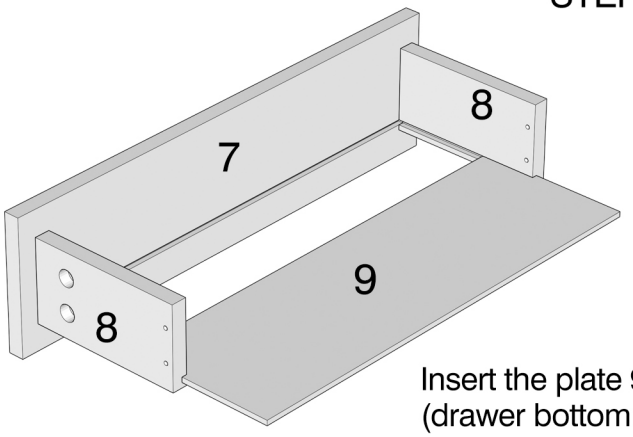

Insert the plate 9 (drawer bottom plate) along the groove

STEP 3

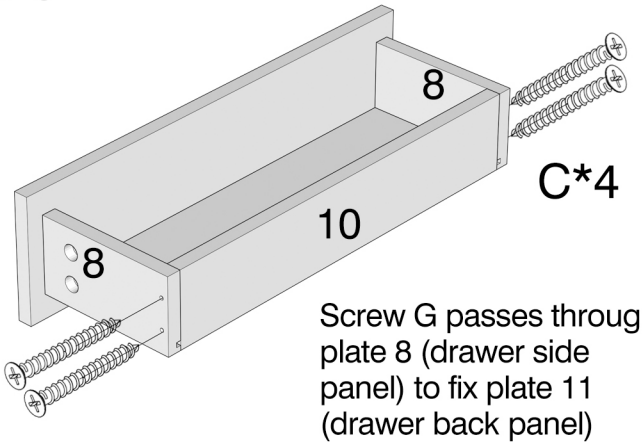

Screw G passes through plate 8 (drawer side panel) to fix plate 11 (drawer back panel)

STEP 4

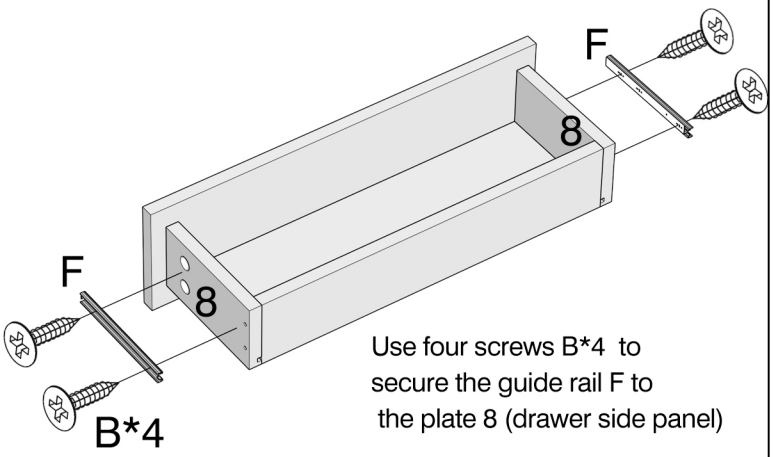

Use four screws B*4 to secure the guide rail F to the plate 8 (drawer side panel)

Repeat steps 1 to 4 to install the other 5 drawers.

STEP 5

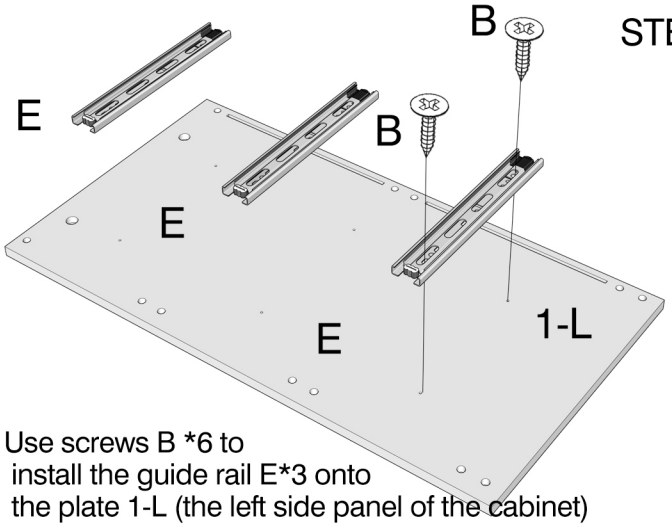

Use screws B *6 to install the guide rail E*3 onto the plate 1-L (the left side panel of the cabinet)

STEP 6

Repeat the method in step 5 to install guide rail E onto plate 1-R (right side plate) and plate 6(neutral plate)
Both sides of plate 6 need to be installed with guide rail E

STEP 7

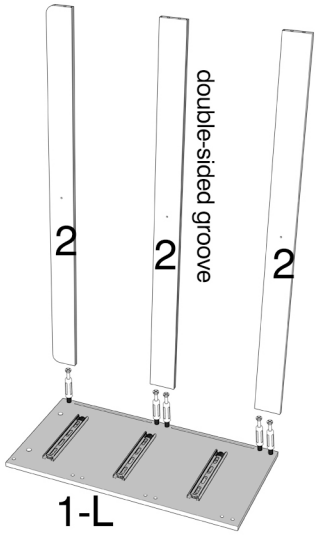

Use screws A*6 to connect plate 1-L and plate 2

For plate 2, the one with double-sided grooves should be placed in the middle

STEP 8

Insert plate 3 (back plate) along the groove formed by plate 2.

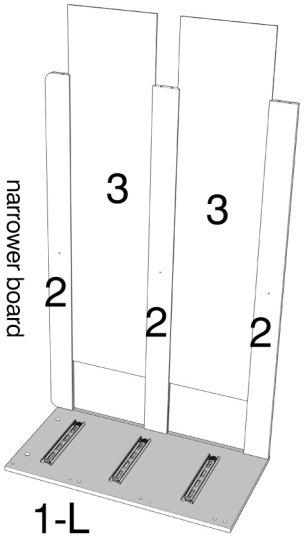

STEP 9

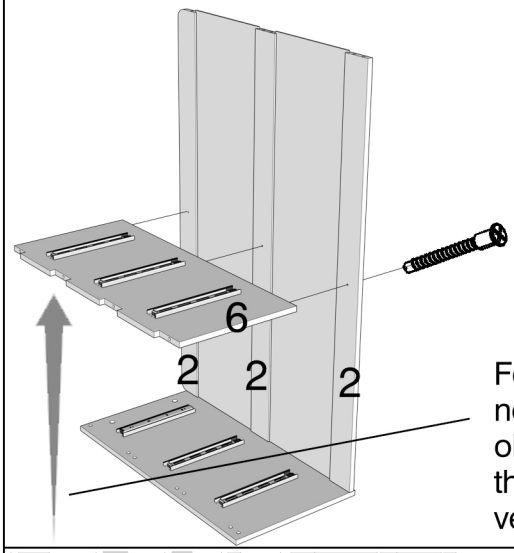

Screw D passes through plate 3 to fix plate 6

For this step, we need to find an object to support the plate 6 to prevent it from falling

STEP 9-2

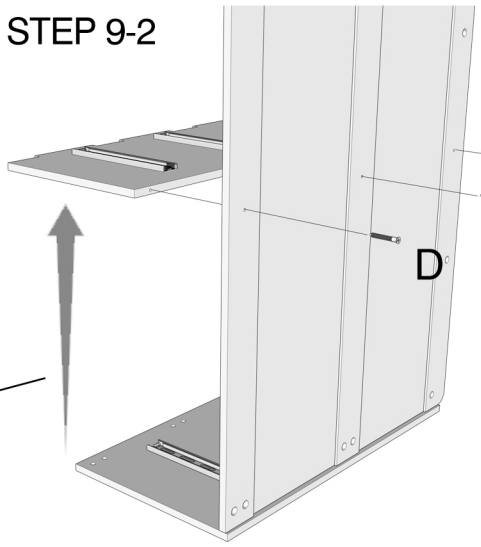

From the back, it looks like it is fixed this way

Screw D*3 passes through plate 3 to fix plate 6

STEP 10

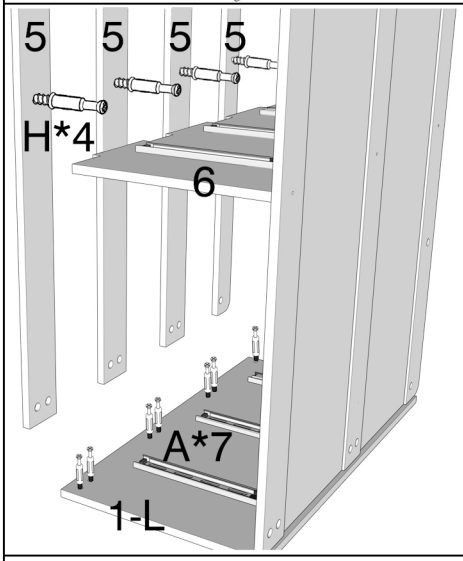

Use screws A*7 to connect plate 5 and plate 1-L

Use screws H*4&h*4 to connect plate 5 and plate 6

H&h is small then A&a

STEP 11

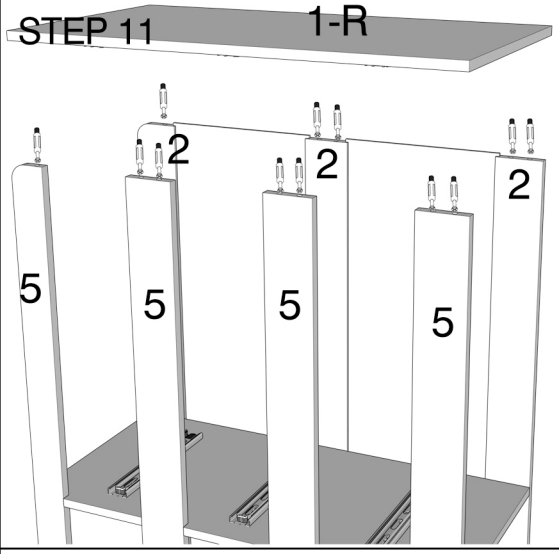

Use screws A*13 to connect plate 1-R and plate 2&5

Step 11: Precautions

Please ensure that when placing the plate 1-R, align it fully with the screw holes and be careful not to get your fingers pinched. There are many screws in this step, and some of them require you to reach deep into the cabinet to install. Please make sure they are installed securely

STEP 12

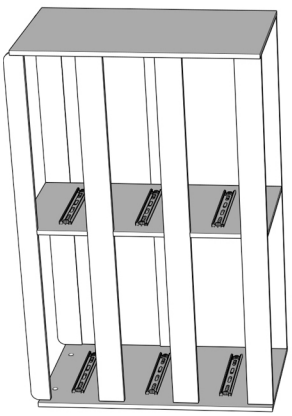

To put down the cabinet, it's best to work together with two people to prevent it from being damaged. Be sure to put it down gently.

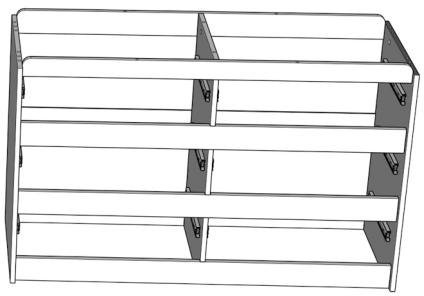

STEP 13

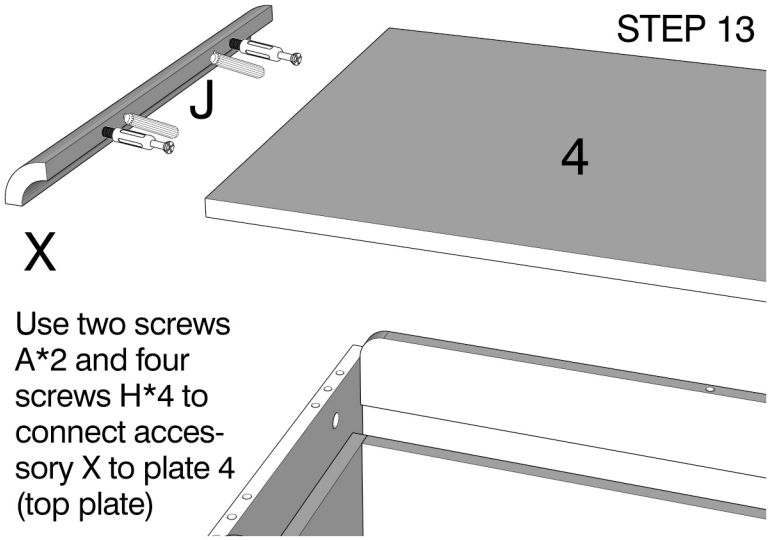

Use two screws A*2 and four screws H*4 to connect accessory X to plate 4 (top plate)

STEP 14

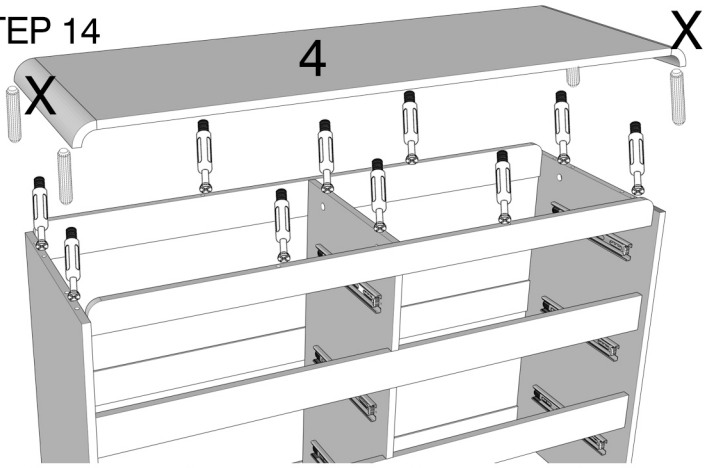

Use screw A*10 to connect plate 4 (top plate) and accessory X to the cabinet body

STEP 15

The drawer is distinguished by its left and right sides
The left drawer will be wider on the right side
The difference is not very obvious, but if you pay attention, you will find it.

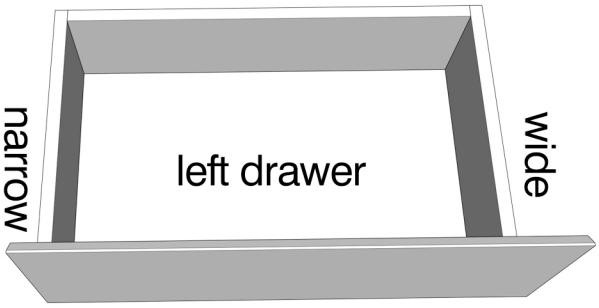

STEP16

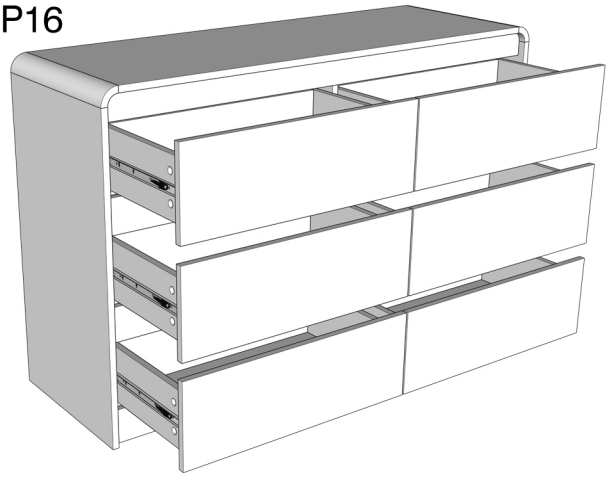

Distinguish the left and right sides of the drawer, and then insert the drawer along the guide rail in order

The drawer may not slide smoothly when inserted for the first time. Pay attention to the fixed position of the screws. If there is any deviation, you can properly loosen the screws that secure the guide rail.

STEP 17

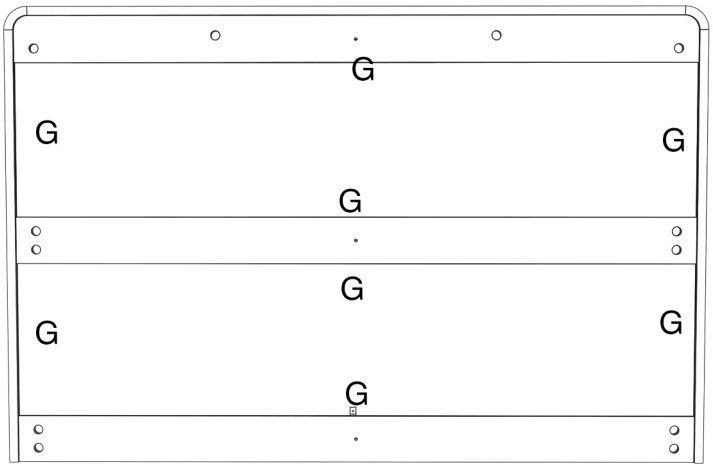

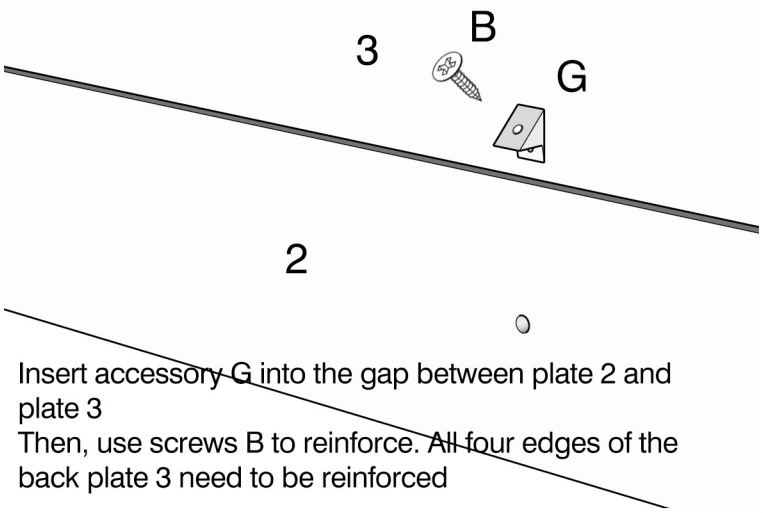

Insert accessory G into the gap between plate 2 and plate 3
Then, use screws B to reinforce. All four edges of the back plate 3 need to be reinforced

STEP 18

Instalar dispositivos antivuelco auxiliares

