WOODBRIDGE®

Tempered Glass Sliding Shower Door

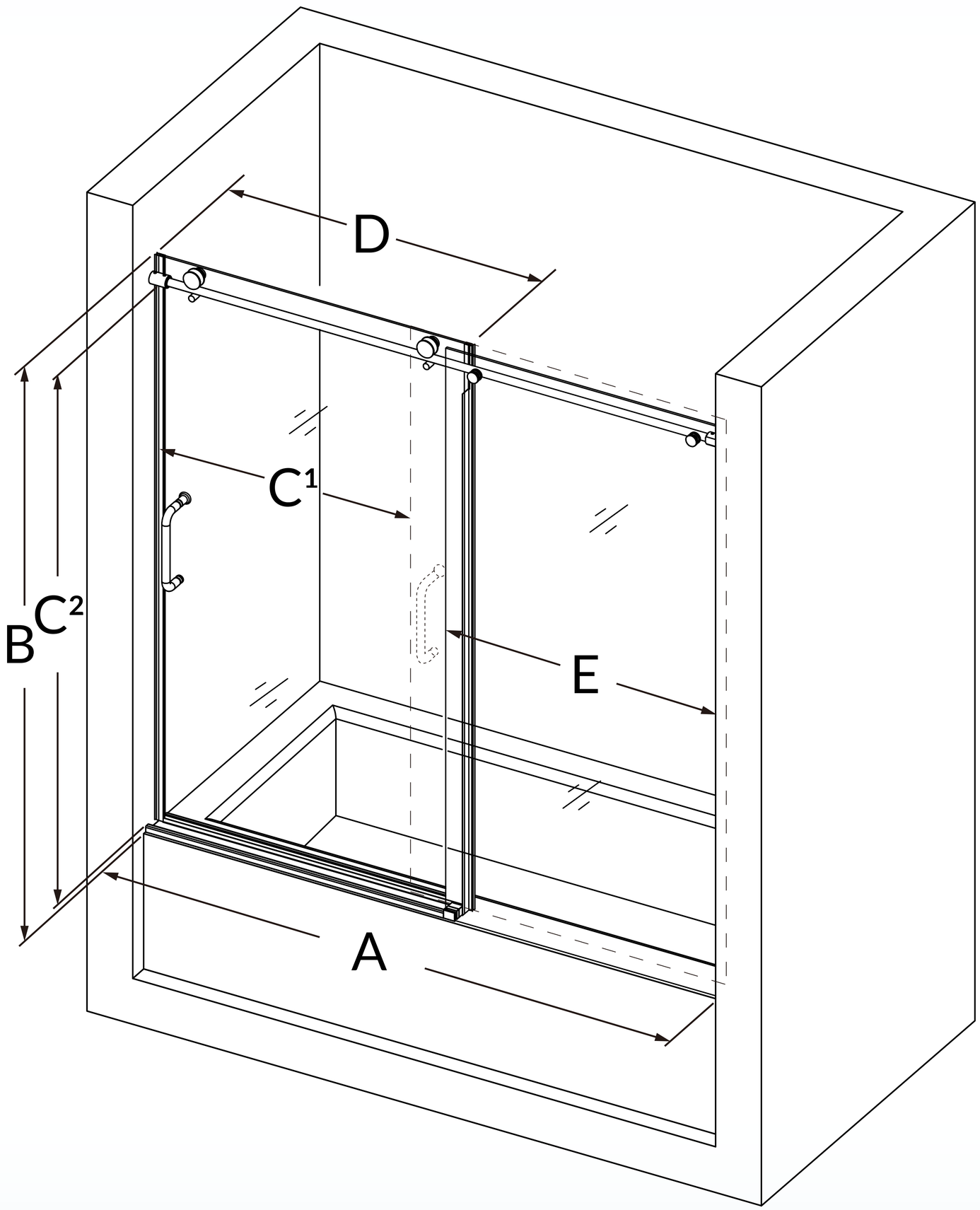

A Model Width

56"~60"

B Product Height

66"

C¹ Access Width

22-7/8"~26-7/8"

C² Access Height

62-3/4"

D Door Width

32-1/2"

E Stationary Glass Width

28-13/16"

Glass Thickness: **1/4"(6mm)**

Minimum Threshold Required: **2-5/16"**