ASSEMBLY INSTRUCTIONS

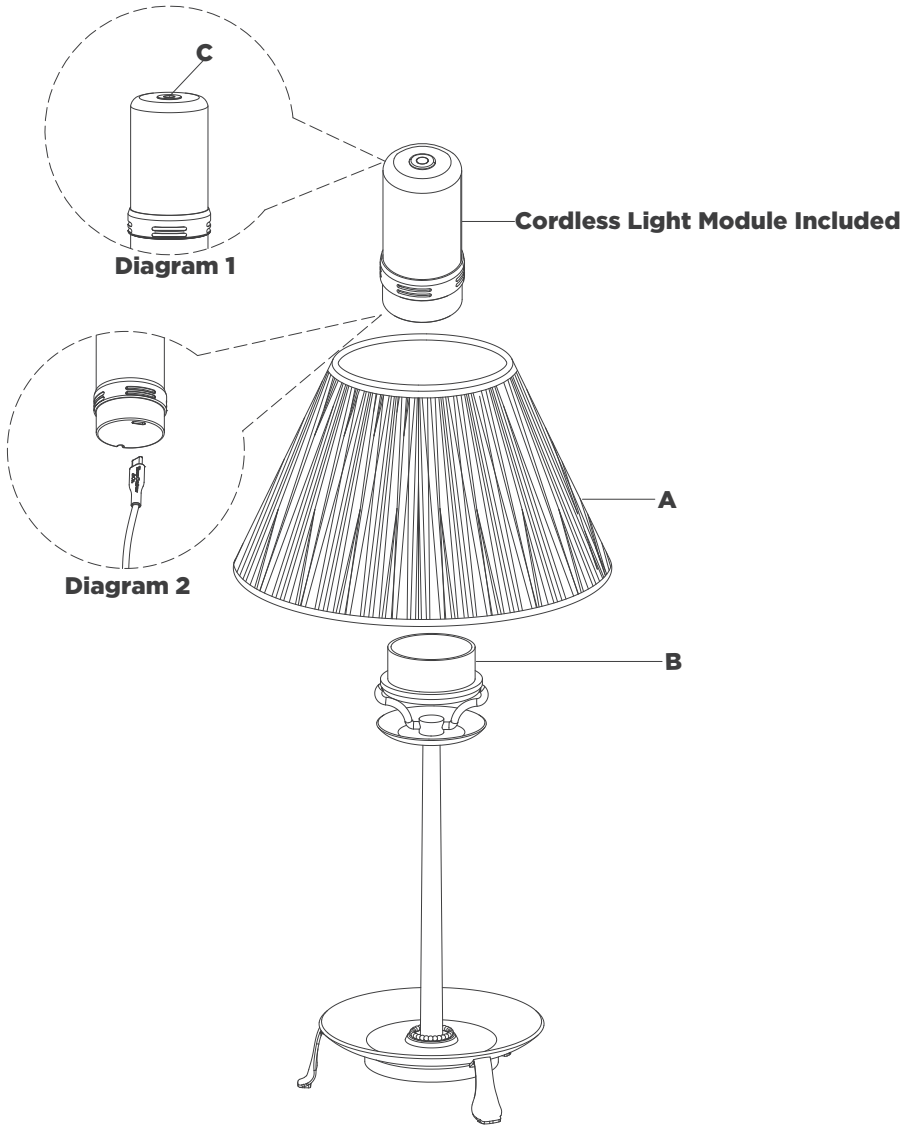

Lazlo 14" Cordless Accent Lamp

Item # CHA8040

NOTICE:

Inspect item carefully before attempting to install. If there is any damage or obvious defect, do not install. Item may not be returned once it has been installed.

---

1. Carefully remove all parts from the box. Place on a clean, soft surface.
2. Remove shade **(A)** from packaging and place onto cordless module holder **(B)**.
   NOTE: If shade has additional packaging, carefully cut from interior of shade to avoid damage.
3. Place cordless light module into cordless module holder **(B)**.
4. For best results fully charge battery before use.
   NOTE: 10W minimum USB power source recommended.
5. Test the lamp.
   Dimmer switch operation: Touch dimmer **(C)** to adjust between high, medium, low and off settings (see diagram 1).

Charging Instructions: Remove cordless light module from lamp and charge using provided USB-C cord (see diagram 2).
NOTE: For convenience, USB-C to USB-A adapter is included.

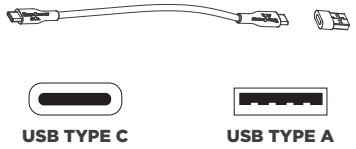

CARE INSTRUCTIONS: Clean only with a soft dry cloth or feather duster. Do not use abrasive or chemical agents.

Intertek DRY LED