NEWAGE PERFORMANCE 36" GRILL

(NATURAL GAS)

SKU#66981 - NEWAGE PERFORMANCE 36" GRILL - NG
SKU#66279 - NEWAGE PERFORMANCE 36" GRILL - NG
WITH NEWAGE 36" GRILL CART

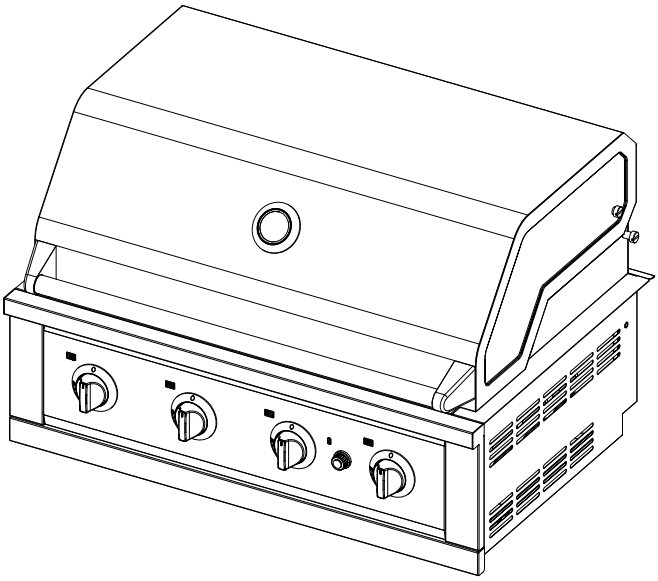

⚠ WARNING

The NewAge grill must be installed by a licensed gas fitter, in accordance with the manufacturer's instructions and all applicable codes and requirements of the authority having jurisdiction.

If the information in the grill's instructions are not followed exactly, a fire, explosion or production of carbon monoxide may result causing property damage, personal injury or loss of life. The licensed gas fitter is responsible for the proper installation of the grill.

INSTALLATION AND OPERATION GUIDE

Warning: Excessive weight hazard!

Use two or more people to move, assemble, or install the grill to avoid back injury. Do not leave children unattended near the grill or cabinets.

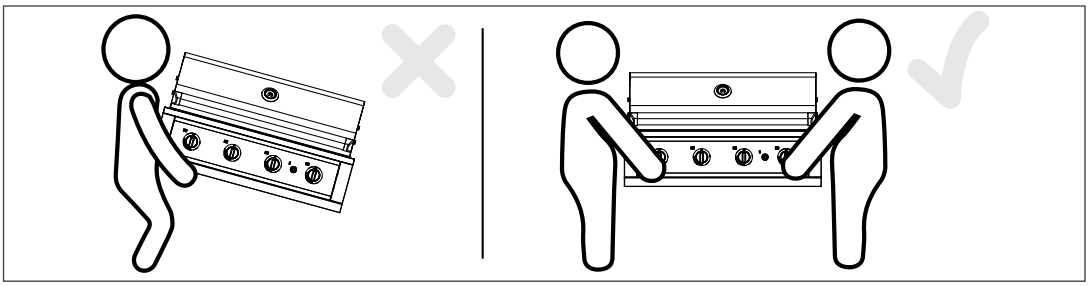

ATTENTION: Is your Grill damaged?

Need help or spare parts? For fastest service, contact NewAge Products at 1-877-306-8930; or support@NewAgeproducts.com.
Do not return to the retailer.

THIS INSTRUCTION MANUAL CONTAINS IMPORTANT INFORMATION NECESSARY FOR THE PROPER ASSEMBLY AND SAFE USE OF THE APPLIANCE.
READ AND FOLLOW ALL WARNINGS AND INSTRUCTIONS BEFORE ASSEMBLING AND USING THE APPLIANCE.
FOLLOW ALL WARNINGS AND INSTRUCTIONS WHEN USING THE APPLIANCE. FAILURE TO OPERATE THIS PRODUCT IN A WELL VENTILATED AREA CAN CAUSE PROPERTY DAMAGE, INJURY OR DEATH.

For the online installation manual and videos regarding this product, please check out our support hub via:
https://NewAgeproducts.com/support-hub/

⚠ DANGER

Read and follow the instructions in this manual fully and completely before installing, servicing or operating the grill to reduce the risk of :

1. **Fire**
2. **Personal injury or property damage**
3. **Improper installation**

THIS PRODUCT IS DESIGNED FOR OUTDOOR USE ONLY. Do not install or operate indoors, in a garage, in a screened in porch, gazebo, or any other enclosed area. This outdoor cooking gas appliance is not intended to be installed in or on recreational vehicles , boats or in a non-ventilated room. Failure to operate this product in a well ventilated area can cause property damage, injury or death. Keep the area surrounding the grill clear and free from combustible materials, gasoline and other flammable vapors and liquids.

⚠ WARNING

Do not store or use gasoline or other flammable liquids or vapors in the vicinity of this or any other appliance.

The installation must conform with local codes or, in the absence of local codes, with either the National Fuel Gas code, ANSI Z223.1/NFPA 54 or the National Gas and Propane installation code, CSA B149.1, or the Propane Storage and Handling Code, CSA B149.2, or the Standard for Recreational Vehicles, ANSI A119.2/ NFPA, and CSA Z240 RV Series, Recreational Vehicle Code as applicable.

⚠ CAUTION

1. **The outdoor cooking gas appliance and its individual shutoff valve must be disconnected from the gas supply piping system during any pressure testing of that system at test pressures in excess of 0.5 psi (3.5 kPa).**
2. **The outdoor cooking gas appliance must be isolated from the gas supply piping system by closing it individual manual shutoff valve during any pressure testing of the gas supply piping system at test pressures equal to or less than 1/2 psi (3.5 kPa).**

⚠ DANGER

IF YOU SMELL GAS:

1. **Shut off gas to the appliance.**
2. **Extinguish any open flame.**
3. **Open the lid.**
4. **If odor continues, keep away from the appliance and immediately call your gas supplier or your fire department.**

⚠ WARNING

CALIFORNIA PROPOSITION 65

1. **This product can expose you to chemicals including Carbon Monoxide, which is a by-product of combustion known to the State of California to cause cancer and birth defects or other reproductive harm. For more information go to www.P65Warnings.ca.gov.**
2. **California law requires businesses to warn customers of potential exposure to such substances. To minimize exposure to the substances, always operate this unit according to the use and care instructions found in this manual. Be certain to provide adequate ventilation when cooking.**
3. **California Proposition 65 lists "Silica, crystalline" which is used in one of the components of the IR burner, as an agent known to the state of California to cause cancer.**

⚠ WARNING

STATE OF MASSACHUSETTS

1. **Massachusetts requires all gas be installed by a licensed plumber or licensed gas fitter carrying the appropriate Massachusetts license.**
2. **All permanently-installed natural gas installation require a "T" handle type manual gas valve be installed in the gas supply line to this appliance.**

⚠ WARNING

1. **Always maintain the required clearances from combustible construction as detailed. The grill is designed for outdoor use only. Never use in a garage, building, shed, breezeway or other enclosed area. This grill shall not be used under any unprotected overhead combustible construction.**
2. **Gas grills are not design certified for and are not to be installed in or on recreational vehicles, portable trailers, boats or any other moving installation.**
3. **Do not repair or replace any part of the grill unless specifically recommended in this manual.**
4. **All gas lines must have a shut-off that is readily and easily accessible. Be sure the owner knows where the shut-off is located. If you smell gas, check for gas leaks immediately. Check only with a soap and water solution. Never check for gas leaks with an open flame. (See INDEX: "Leak Testing" for further details.)**

IMPORTANT NOTES

This Gas Barbecue Is Certified Under Canadian And American National Standards, ANSI Z21.58-2018 and CSA 1.16-2018 respectively for Outdoor Gas Grills and should be installed to conform with local codes. In absence of local codes, install to the current CAN B149.2 Natural Fuel Gas Code and the Propane Installation Code, CSA B149.1 Propane Installation Code in Canada or to the National Fuel Gas Code, ANSI Z223.1/NFPA 54 the National Fuel Gas Code the Natural Gas and Propane Installation Code, CSA B149.2.

Index

Safe Operating Practices	6
Parts Supplied	11
Tools Needed	12
Product Inspection	12
Product Specifications	13
Installing Grill on NewAge Grill Cabinet/Cart	14
Installing Grill on custom built cabinet	18
Assembling the Grill	22
Optional Accessories	24
Gas Connections	27
Leak Testing Instructions	31
AA Battery Maintenance	33
Pre-Grill Checklist	34
Lighting the Grill	35
Burner Position and Flame Adjustment	38
General Grill Operation and Cooking Procedures	41
Grill Maintenance and Cleaning	44
Troubleshooting	48
Exploded View and Spare Parts	51
NewAge Customer Service	53

NEWAGE PRODUCTS INC. PERFORMANCE GRILLS MANUFACTURER WARRANTY

PROOF OF PURCHASE IS REQUIRED TO OBTAIN WARRANTY SERVICE.
Please have the following information available when you call our customer service team:

- Name, address and telephone number
- Product Name / SKU Number
- A clear, detailed description of the problem
- Proof of purchase including order number

Register your NewAge Products purchase online for quicker customer assistance and access to exclusive benefits

Visit www.newageproducts.com/register/

Warranty Claim
For warranty service please contact NewAge Products at
1-877-306-8930; or support@newageproducts.com
Please review all warranty details below, prior to contacting NewAge Products for a claim.
Scan the QR code on the right to access our support page or visit www.newageproducts.com/contact-us/

Scan this QR code with the camera on your mobile device to visit the NewAge Products Support Hub
www.newageproducts.com/support-hub/

LIMITED WARRANTY

NewAge is proud to offer a 10 Years Limited Warranty from the date of purchase. This is subject to the limitations and disclaimers set forth below and other product documentations.

Length of Warranty	Warranty Covered Items	Cost to NewAge	Cost to Customer
10 years	Stainless steel grill hood / burner box/ Interior Brackets	Materials	Shipping
5 Years	Rotisserie Forks and Spit, Rotisserie Rollers, Grill grates, Grease Trays, Ceramic Rotisserie Burner, Ceramic Sear Burner, H shaped Burner and Side Burners	Materials	Shipping
2 Years	All other parts and accessories	Materials	Shipping

WHAT IS COVERED

When this product is installed, operated and maintained according to the instructions attached to or furnished with the product, NewAge Products Inc. will replace the defective product or parts if the part fails as a result of defective materials or workmanship for the warranty duration from the purchase date of the product.

WHAT IS NOT COVERED

1. Service calls to correct the installation of any NewAge products or to instruct you how to use or install them.
2. Damage resulting from products caused by accident, misuse, abuse, fire, flood, improper installation, acts of God, neglect, modification or mishandling.
3. Products damaged by improperly loading beyond the specified maximum weight capacity outlined in the instructions provided with the product.
4. Repairs or replacement when your product is used in other than normal, residential use, such as a commercial environment, or handled in anyway inconsistent with the installation instructions included with the product.
5. Cosmetic damage that occurs after customer purchasing the product, including scratches, dings, dents, corrosion, or stains in the material that does not affect the structural or functional capability of the product.
6. Surfaces damaged due to improper use of chemicals, and detergents.
7. Discoloration due to the high heat, for example beside a grill, is a trait of stainless steel.
8. Surface rust resulting from acid rain or environmental chemicals.
9. Replacement parts for NewAge products outside Canada and the United States.
10. Loss due to theft.
11. Damage resulting from use of the product contrary and not in accordance to the instruction manual.
12. Any labor costs during the warranty period.

The 304 stainless steel material used in the construction of NewAge Outdoor Kitchen Grill is highly rust resistant, however, chlorine in the air from swimming pools or the salt from sea air may cause surface rust to appear and even create some pitting corrosion if left on the product. We suggest cleaning all stainless steel surfaces at least every two weeks to keep your Grill in prime condition. The chemical reaction from salt is easy to prevent however it is more difficult when left on the surface.

DISCLAIMER OF IMPLIED WARRANTIES

IMPLIED WARRANTIES, INCLUDING TO THE EXTENT APPLICABLE WARRANTIES OF MERCHANTABILITY OR FITNESS FOR A PARTICULAR PURPOSE, ARE EXCLUDED TO THE EXTENT LEGALLY PERMISSIBLE. ANY IMPLIED WARRANTIES THAT MAY BE IMPOSED BY LAW ARE LIMITED TO ONE YEAR, OR THE SHORTEST PERIOD ALLOWED BY LAW. THIS WARRANTY IS LIMITED TO THE ORIGINAL BUYER. Some states and provinces do not allow limitations on the duration of implied warranties of merchantability or fitness, so this limitation may not apply to you. This warranty gives you specific legal rights, and you also may have other rights that vary from state to state or province to province.

LIMITATION OF REMEDIES; EXCLUSION OF INCIDENTAL AND CONSEQUENTIAL DAMAGES

YOUR SOLE AND EXCLUSIVE REMEDY UNDER THIS LIMITED WARRANTY SHALL BE PRODUCT REPAIR OR REPLACEMENT AT OUR DISCRETION AS PROVIDED HEREIN. NEWAGE SHALL NOT BE LIABLE FOR INCIDENTAL OR CONSEQUENTIAL DAMAGES. Some states and provinces do not allow the exclusion or limitation of incidental or consequential damages, so these limitations and exclusions may not apply to you. This warranty gives you specific legal rights, and you also may have other rights that vary from state to state or province to province.

Safe Operating Practices

1. NewAge Grill must be assembled and installed according to the instructions in the manual.
2. Read the entire instruction manual prior to operating grill.
3. NewAge Grill must be used outdoors in a well ventilated area, and cannot be used indoors, in a enclosed area such as a garage, gazebo, screened in porch or other similar enclosed area.
4. NewAge grills are not designed or certified for and are not to be installed in or on recreational vehicles, portable trailers, boats.
5. Never use the grill in windy conditions. If located in a consistently windy area, oceanfront, mountaintop, etc., a windbreak will be required. Always adhere to the specified clearances as described in the INSTALLATION section of this manual. ***Refer to the page 10 for additional information.***
6. Do not modify the NewAge Grill.
7. Do not operate the NewAge Grill under, or near combustible construction.
8. Maintain proper clearance to combustibles, 18" (457 mm)to rear of unit, 14" (356mm) to sides. Additional clearance of 32" (810mm) is recommended near vinyl siding or panes of glass.
9. When not in use turn off the gas at the supply valve.
10. Always shut off the main valve on the Natural gas supply after each use.
11. Never attach or disconnect to gas supply, or move or alter gas fittings when the grill is in operation or is hot.
12. Natural gas units must be disconnected from the supply when being stored indoors.
13. Inspect the fuel supply hose before each use. If there is evidence of excessive abrasion or wear or the hose is cut, it must be replaced prior to using the gas grill with a replacement hose assembly specified by the grill manufacturer.
14. Leak test the unit before initial use, annually, and whenever any gas components are replaced. ***Refer to page 10 for additional information.***
15. Follow lighting instructions carefully when operating grill.
16. Burner controls must be off when turning supply valve on.
17. The grill hood must be fully opened while lighting the grill. Failure to do so will risk an explosion, and personal injury or death.
18. Never lean over the grill and keep face away from grill when lighting.
19. Never let your gas hose touch your burner box. ***Refer to page 11 for additional information.***
20. Always use a covered hand when opening the grill lid and only do so slowly to allow heat and steam to escape.
21. Do not leave grill unattended when operating.
22. Do not use aluminum foil to line drip pans or grill grates or radiants. This can severely upset combustion air flow or trap excessive heat in the control area. The result of this can be melted knobs or damaged ignition components.
23. Adults and children should be instructed on the hazards of high surface temperatures. Never leave children unsupervised around the NewAge Grill.
24. Never touch the grill racks, hood or immediate surrounding metal surfaces with your bare hands while grilling.
25. The NewAge Grill must be cooled before it is covered. Never place the cover on when cooking or while hot.

Safe Operating Practices

26. Never grill without the drip pan installed. Hot grease can leak down and produce a fire or explosion.
27. Clean grease trays regularly to prevent grease fires. ***Refer to page 10 for additional information.***
28. Spiders and insects like to nest in the burners, venturis, valves and orifices of a grill, disrupting the gas flow. This very dangerous condition can cause a fire behind the control panel, damaging the grill and risking personal injury. If your grill has been unused for a long time, inspect and clean the burners, venturis, valves and orifices.
29. Clean the grill with caution. Avoid steam burns; do not use a wet sponge or cloth to clean the grill while it is hot. Some cleaners produce noxious fumes or can ignite if applied to a hot surface.
30. Do not locate, store or operate the grill on an inclined plane. If you are using a grill cart, make sure you lock the castor wheels before operating the grill.
31. Do not move the appliance during use.
32. Do not use a power washer to clean the NewAge Grill.
33. Always have an ABC Fire Extinguisher accessible — never attempt to extinguish a grease fire with water or other liquids.
34. Make sure the licensed gas fitter shows you where your gas supply shut-off is located. All gas lines must have a shut-off that is readily and easily accessible. If you smell gas, check for gas leaks immediately. Check only with a soap and water solution.
35. For personal safety, wear proper apparel while barbecuing.
36. Do not use the grill for cooking excessively fatty meats or products, which promote flare-ups. To Control flare-ups, adjust the controls to lower the temperature. If your grill flare-up is out-of-control, turn off the burners. Don't use water to put out flare-ups. Spraying water on a flare-up can cause grease to explode.
37. Make sure that the AA batteries (rechargeable and non-rechargeable) are removed from the Pulse Ignitor/ decomposed/ scraped after recommended AA battery life by the manufacturer.
38. NEVER use physically damaged AA batteries, it may corrode the inner parts or completely damage the Pulse Ignitor.

Note: THIS MANUAL MUST REMAIN WITH THE PRODUCT OWNER FOR FUTURE REFERENCE

Safe Operating Practices

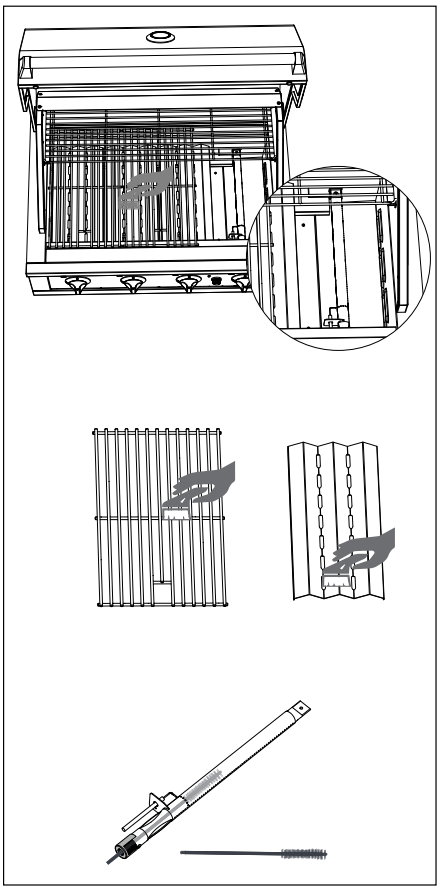

Regularly clean your grill components to prevent flare-ups and grease fires

Just like the cooking appliances in your home, your NewAge Grill needs to be regularly cleaned and maintained to operate at peak performance. This not only produces tastier, healthier food, but it reduces the chance of dangerous flare-ups or grease fires.

Here are the key areas to keep clean:

1. Remove cooking grates and scrape excess food particles with a BBQ brush after every use. For a deep clean, soak and scrub with dish soap and water a few times per season.
2. Pull out the grease tray after every use and scrape off any grease or food chunks. Wash with dish soap and water to keep it sparkling clean.
3. Your Flame Tamer Panels will accumulate a lot of burnt on sauces and grease drippings. Remove residue from the Panels with a scraper, and use a wire brush to clear debris from the Flame Tamers.
4. Burners that aren't used frequently can get blocked by spiders who are drawn to the gas smell, and build webs inside the burner tubes. Use a wire-brush to clean the inside of the burners and remove debris from the outside of the burners.
5. Scrape down the interior of your burner box at least once a season to remove carbon build-up. Scoop or vacuum out the debris, reinstall all components and enjoy a much cleaner grilling experience.

Test your hose connections for gas leaks

Gas leaks are a serious issue that can be easily avoided by doing a quick and simple leak check annually, or whenever gas components are replaced or serviced.

1. Ensure that all grill control knobs are in the off position.
2. Turn on the fuel supply,
   For Natural Gas
   Turn the valve handle 1/4 turn to align with the gas flow.
3. Brush or spray a half-and-half solution of liquid soap and water onto all joints and connections of the regulator, hose, manifolds and valves.
4. Bubbles will indicate a gas leak. **IMMEDIATELY** turn off the gas supply and do not use the grill until contacting a licensed gas fitter to replace faulty parts.

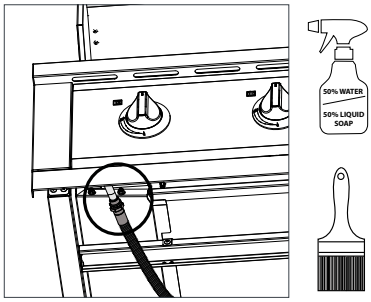

Leak Testing Diagram

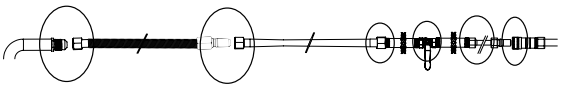

⚠ WARNING

The leak test must be done before initial use, annually, and whenever any gas components are replaced or serviced. Do not smoke while performing this test and remove all sources of ignition. See Leak Testing Diagram for areas to check. Never conduct a leak test using fire or flame. Sparks or open flames will result in a fire or explosion, damage to property, serious bodily injury or death.

Safe Operating Practices

Never let your gas hose touch your burner box

The underside of your grill gets incredibly hot. Pushing your excess gas line into the cavity below your grill, or coiling it beneath the burner box can melt the exterior coating of the gas hose and cause a fire.

Take these steps to make sure your hose is positioned safely:

1. Ensure your grill is **off** and **cooled down**.
2. Kneel down and look in the cavity for the hose at the left-hand side of the grill.
3. If the hose is bunched up, or touching the firebox, pull the gas hose from the bottom of the cabinet until any excess line is removed.
4. Check the hose for signs of melting or damage. If the damage has occurred, or you are unsure of how to check, contact **Customer Support Team > 1-877-306-8930; or support@NewAgeproducts.com**

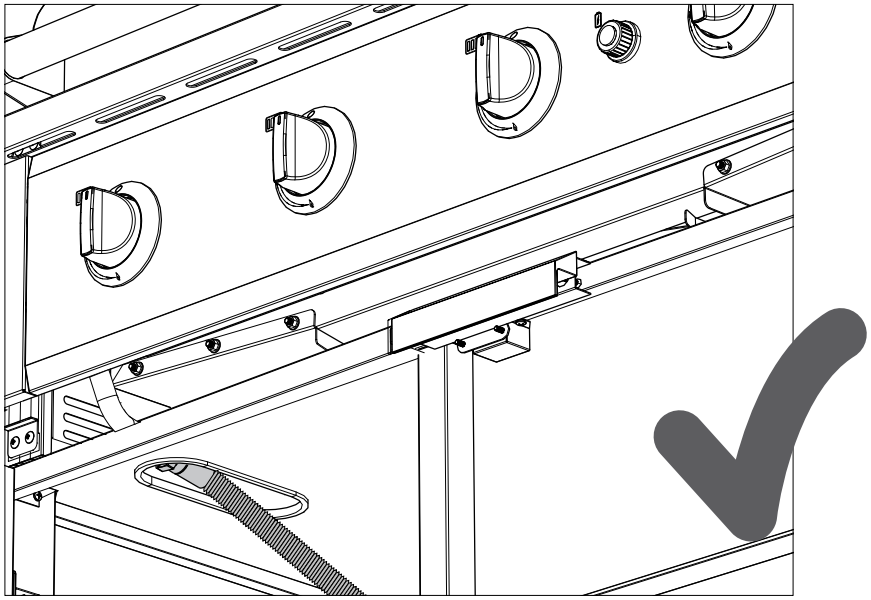

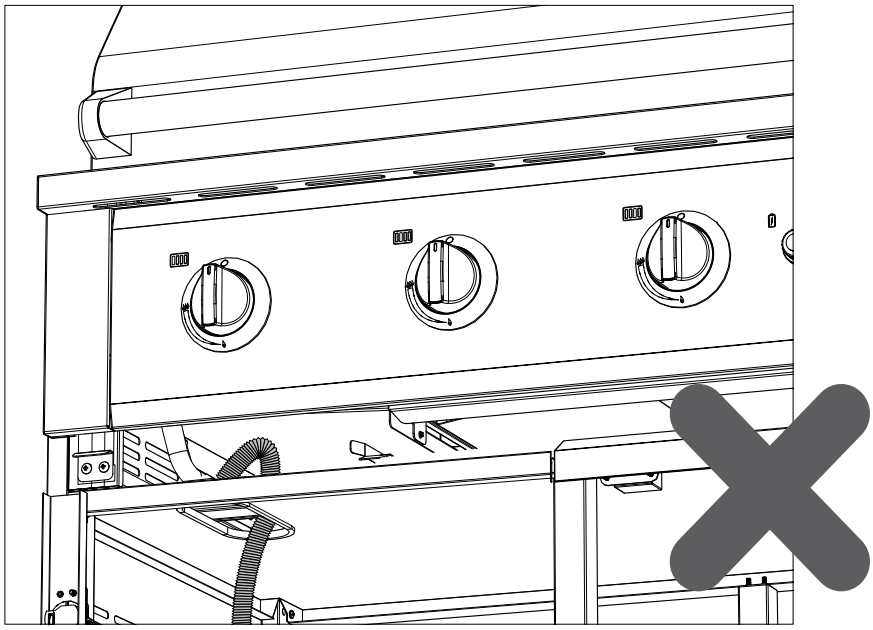

Safe Operating Practices

Grilling in windy conditions

⚠ WARNING

Using your grill in windy conditions may disrupt the front-to-back airflow. If, while grilling with all burners on high and the hood closed, you notice that the temperature gauge fails to rise.....be careful. If wind has kept hot gases from exiting the rear of the grill the control panel and knobs may have become extremely hot.

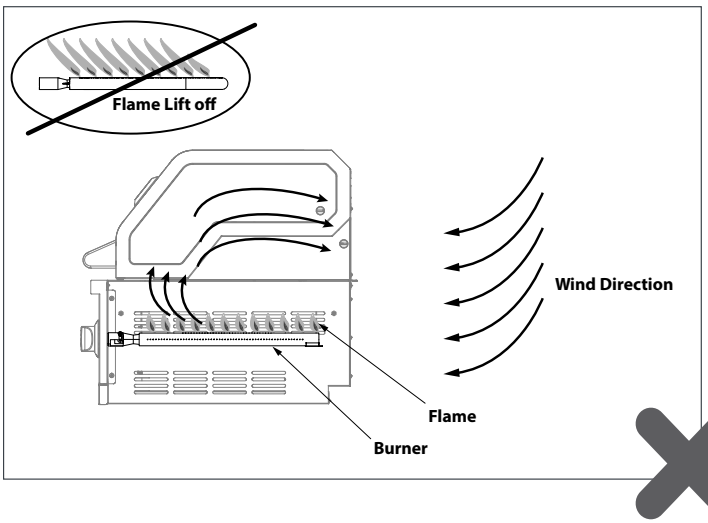

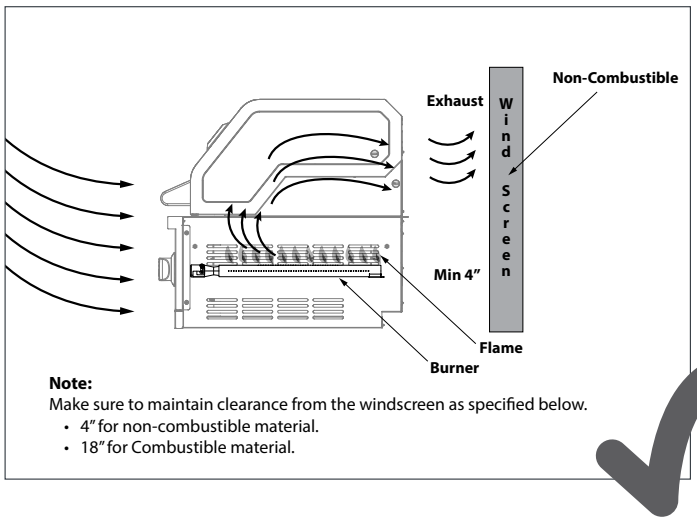

During the high wind conditions, it is best if you don't use your grill. If located in consistently windy area (oceanfront, mountaintop, etc.) a wind break will be required. Always adhere to the specified clearances as defined in the "Installation Manual".

⚠ Note

Any damage caused from use in windy conditions, such as melted knobs or igniter wires, or control panel discoloration from heat buildup, is excluded form warranty coverage.

Parts Supplied

Main Grill Parts

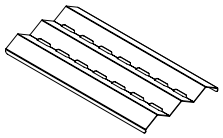

4x Flame Tamer Panel

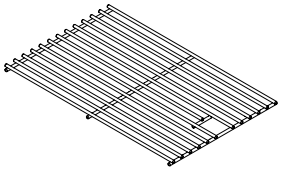

3x Cooking Grate

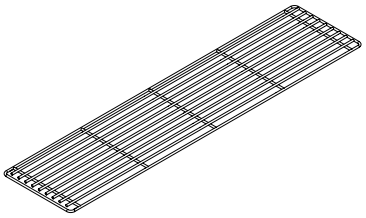

1x SS Warming Rack

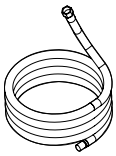

1x Natural Gas Hose (Pre-insalled)

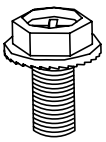

2 x M6x12L Hex Head Screws

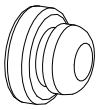

2x Spare Rubber Bumpers

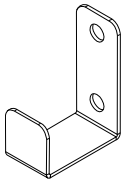

2 x L Bracket

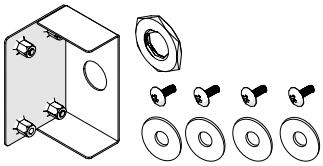

Mounting bracket for Connector And Hardware Kit

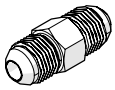

1 x Male Adaptor (5/8”-18UNF)

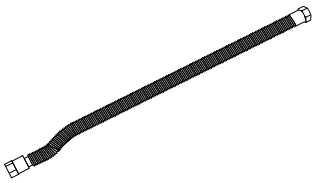

1 x Metal Corrugated Natural Gas Hose (Pre-installed)

Optional Accessories

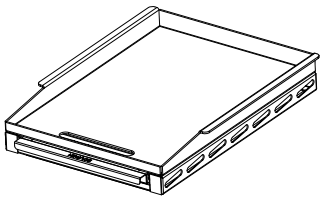

Griddle
SKU#66940

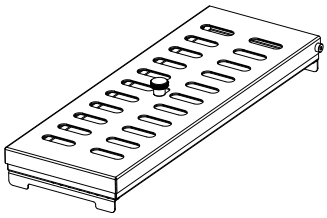

Smoker Box
SKU#66946

***Accessories offering depends on location and subject to change.**

Tools Needed

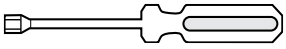

6mm Nut Driver

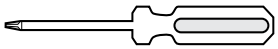

#2 Phillips head screwdriver

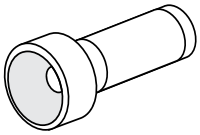

Flashlight

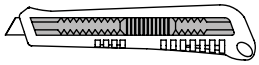

Box Cutter

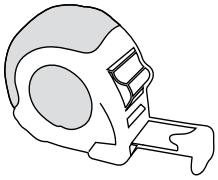

Measuring Tape

6mm Open Wrench

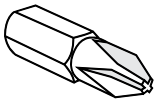

(Optional) #2 Phillips Bit

Product Inspection

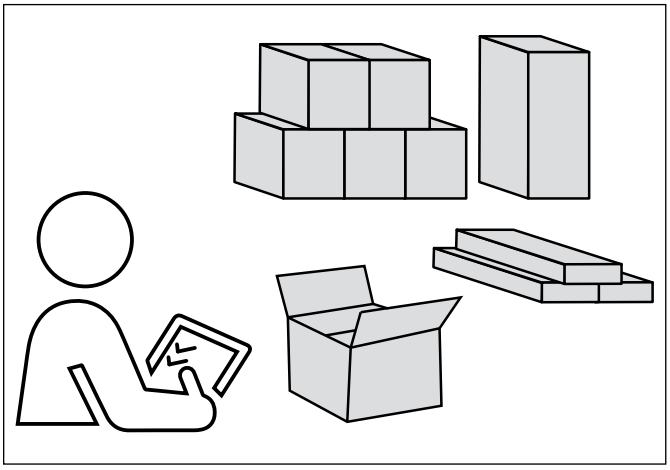

- Check to see all parts are received as per the order placed.
- Contact NewAge Products at 1-877-306-8930; for any missing parts.
- Inspect the products for any damages before starting the installation.
- Go through the installation instructions carefully before starting the installation.

Product Specifications

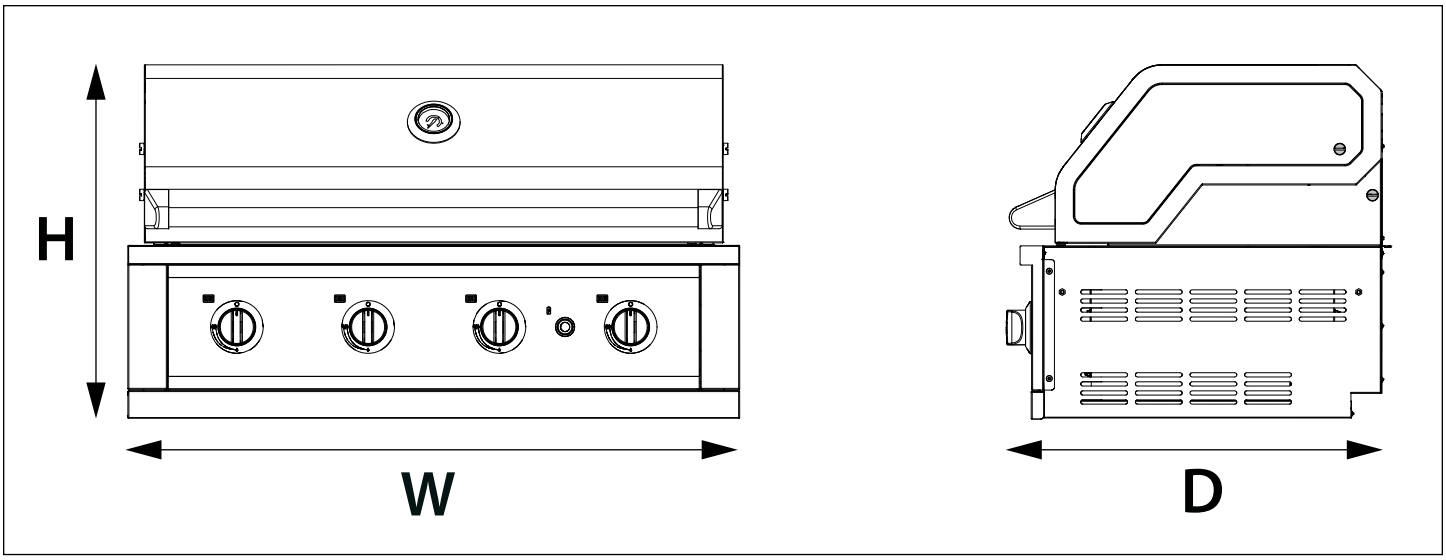

NewAge 36” Grill

Dimensions

Width (W)	35.98”
Depth (D)	24.20”
Height (H)	23.04”

Details

Material	Stainless Steel	**Main Grilling Area**	562 Square inch
Primary Burner BTU	12,000 BTUs x 4	**Warming Rack Area**	257 Square inch
Fuel Type	Natural gas	**Cutout Width**	34.5”
Total Power Output	48,000 BTUs	**Cutout Depth**	22.3”
Net Weight	126.8 Lbs	**Cutout Height**	11.2”

Installing Grill on NewAge Grill Cabinet/Cart

For more detailed instructions on installation steps, refer to the NewAge Grill Cabinet/ Cart installation guide.

1. Lock the Casters (if applicable). Pick the appliance from the shipping pallet, and place it onto the Cabinet/Cart directly.

NOTE: When you are ready to install the appliance, place it directly onto the Cabinet/ Cart.
DO NOT place the appliance on floor or flat surface.

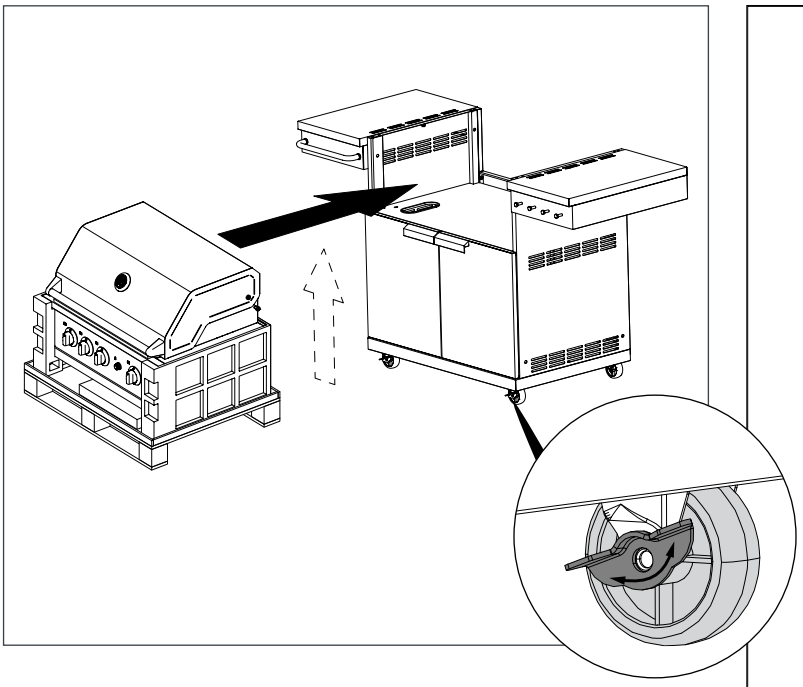

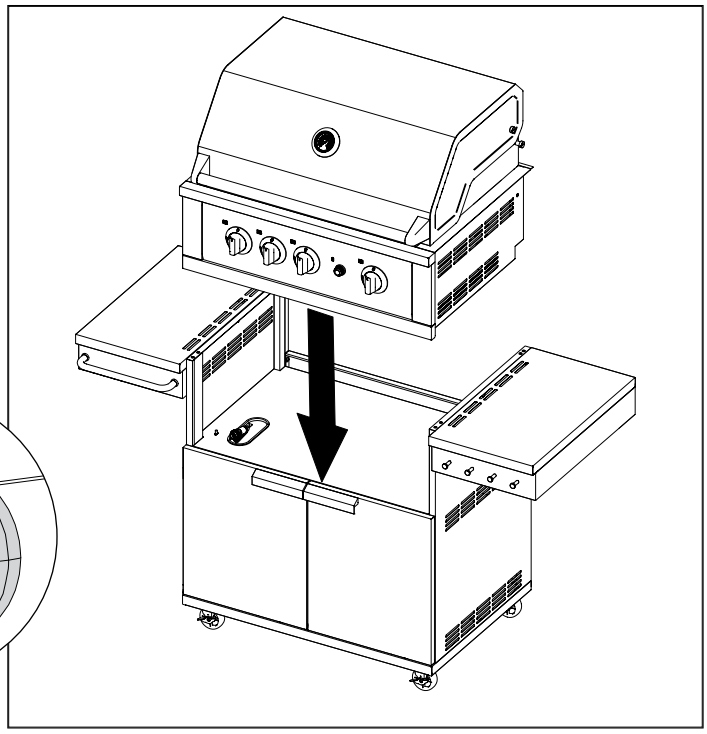

2. Secure grill to Cabinet/Cart by inserting two M6x12mm screw supplied with NewAge Cabinets/Carts from the bottom.

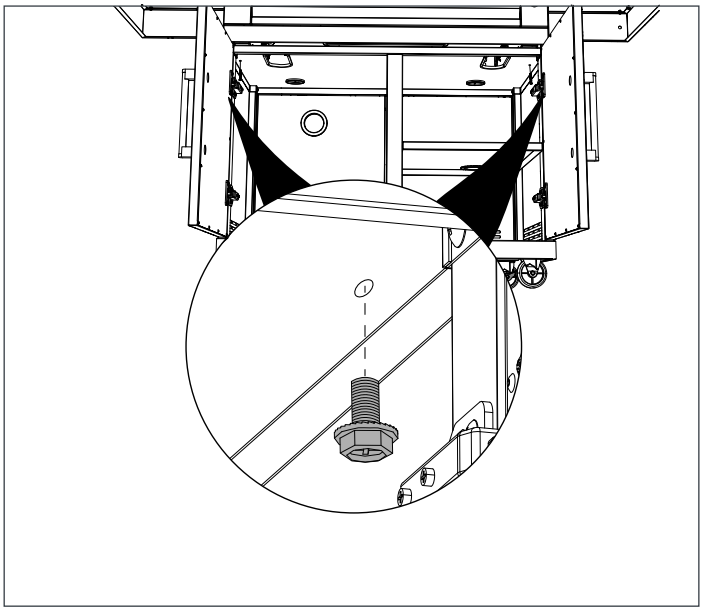

While connecting the gas hose to the grill, make sure the hose is not bunched up below the grill.

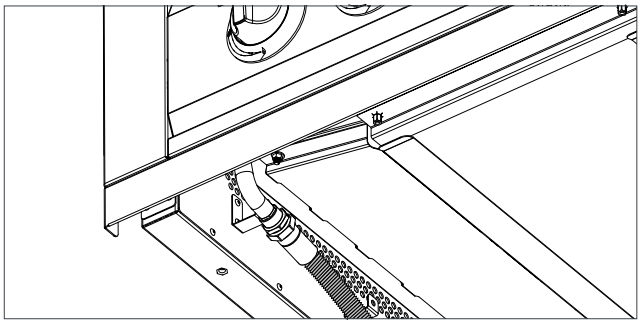

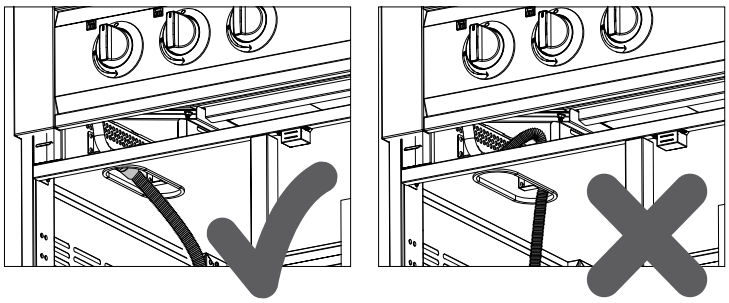

Installing Grill on NewAge Grill Cabinet/Cart

Metal Corrugated hose fixed to the cart with a fixed arrangement of straight connector/adaptor with a lock nut on brackets.

Parts Required

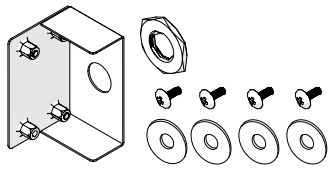

Mounting bracket for Connector And Hardware Kit

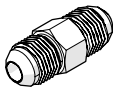

1 x Male Adaptor (5/8"-18UNF)

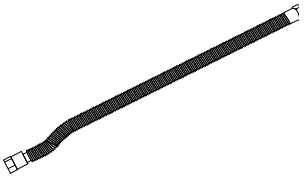

1 x Metal Corrugated Natural Gas Hose (Pre-installed)

Follow step 1 and 2 for connecting Metal corrugated hose and PVC Natural gas hose together with the help of Mounting bracket and Male adaptor.

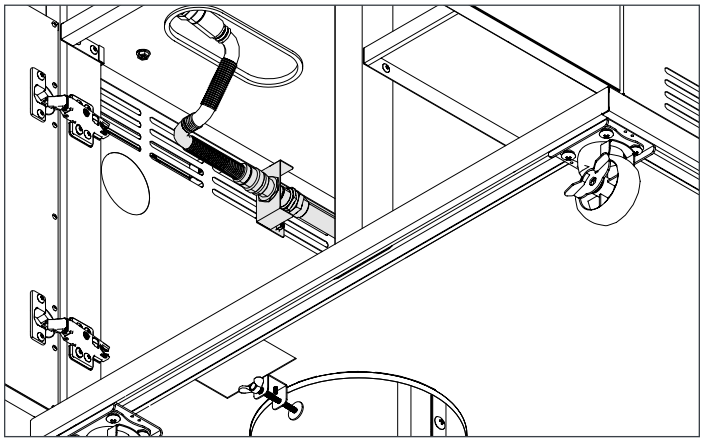

1 Install Mounting bracket on the cabinet side panel vent slots using Provided washers and Philips screws.

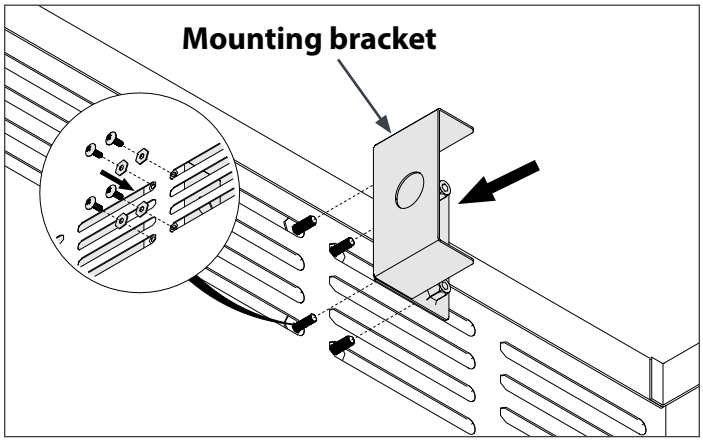

2 Secure and connect Metal Corrugated hose and PVC Natural gas hose end together by using Lock nut and Male adaptor.

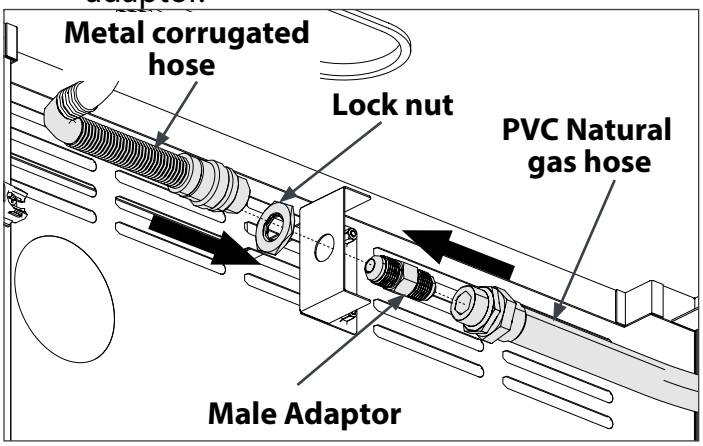

Below Illustration shows Metal corrugated hose and PVC Natural gas hose connected together.

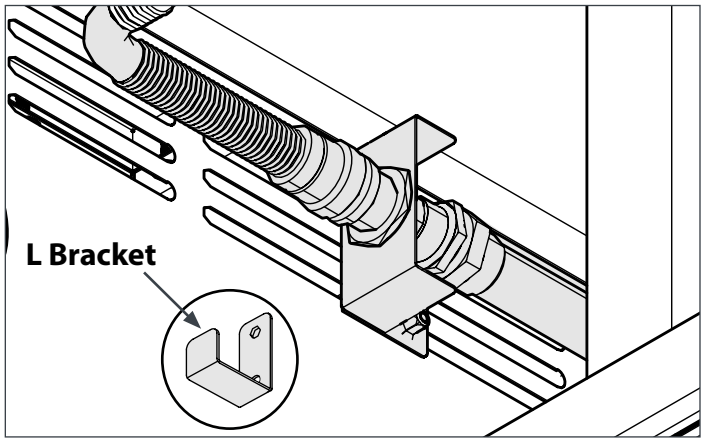

Note: Route PVC Natural gas hose further using the L brackets additionally to secure hose if required

Installing Grill on NewAge Grill Cabinet/Cart

NOTE: Route the Power cable outside the cart back panel. **DO NOT** route the cable through underneath the Grill. (Applicable to Grill Cabinets and Carts both)

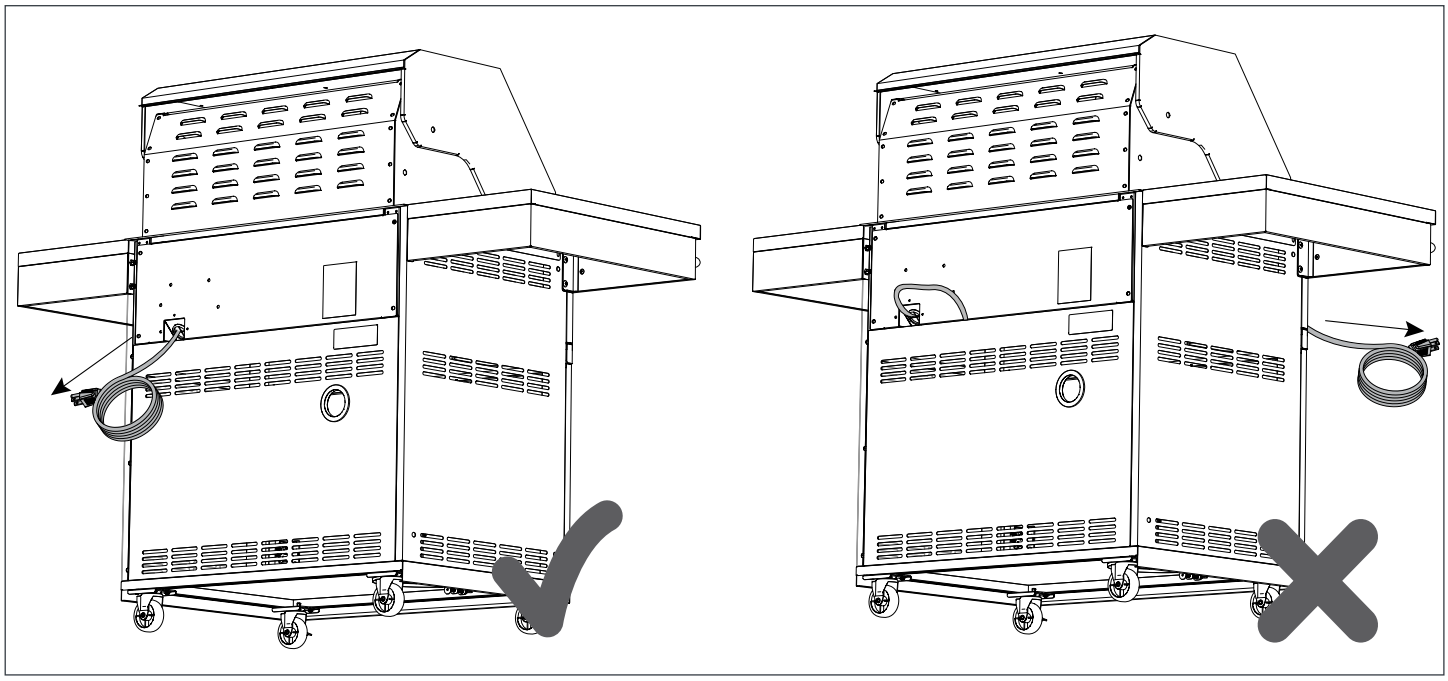

NOTE: While connecting the gas hose to the grill, make sure the hose is not bunched up below the grill. (Applicable to Grill Cabinets and Carts both)

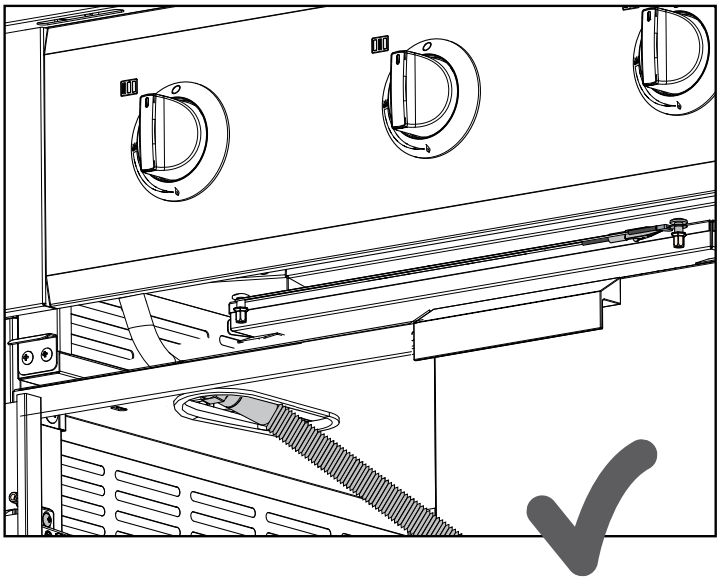

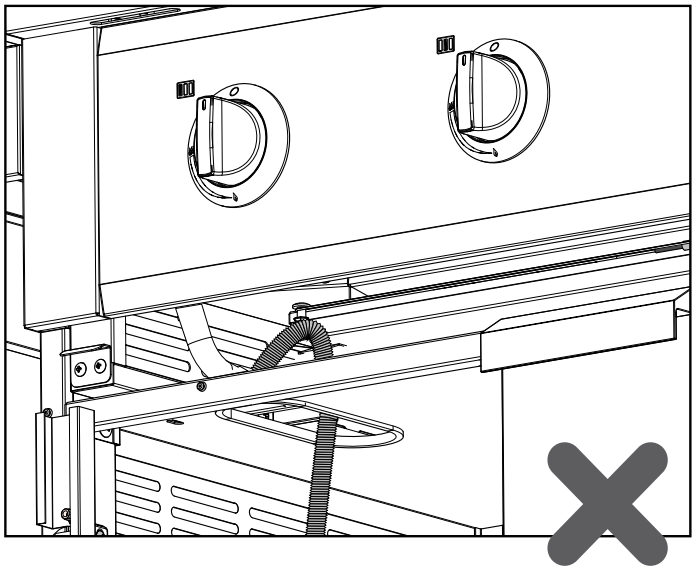

Installing Appliance on NewAge Grill Cabinet

NOTE: Route the Power cable outside the cabinet back panel. **DO NOT** route the cable through underneath the Grill. (Applicable to Grill Cabinets and Carts both)

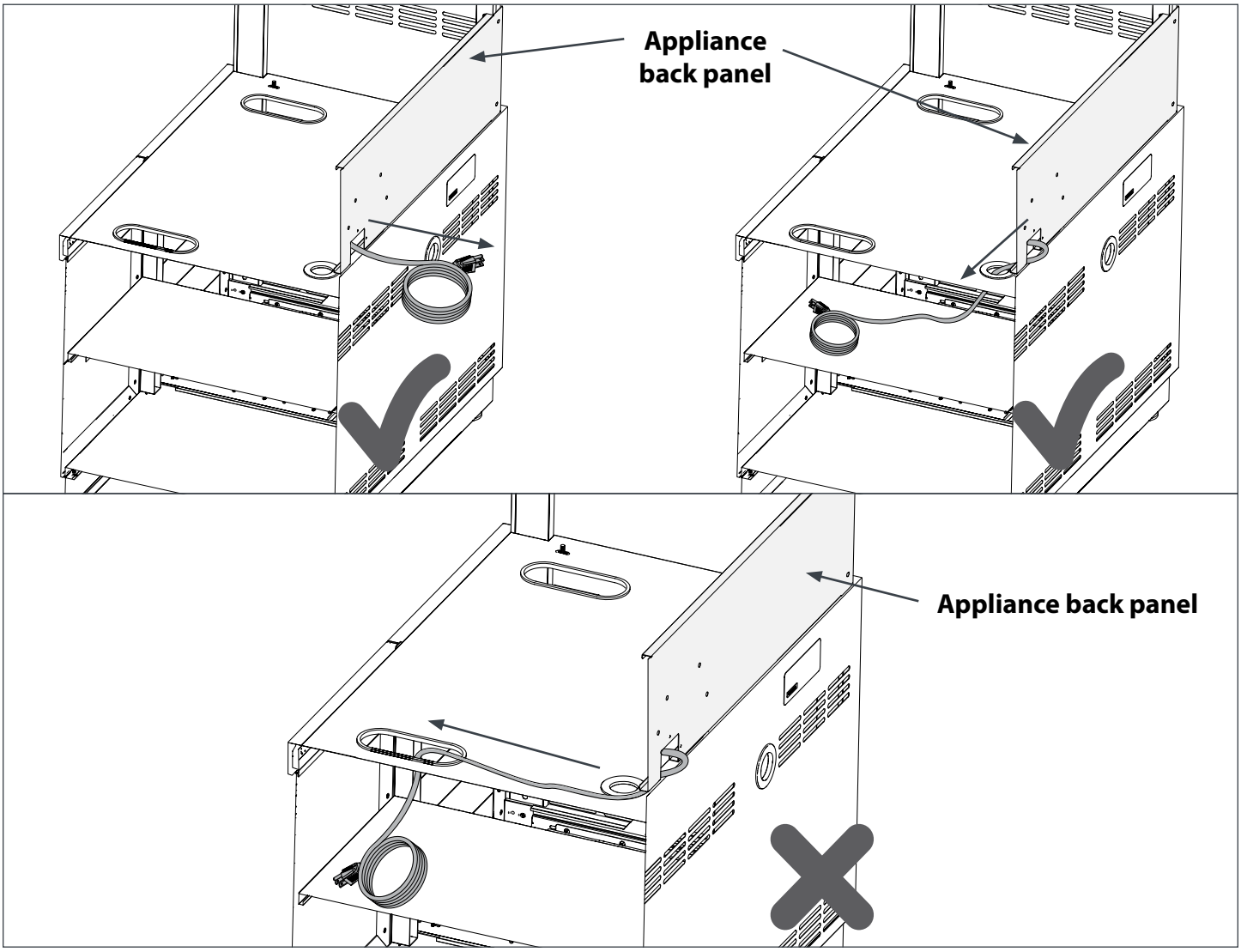

Installing Grill on custom built cabinet

The installation must conform with local codes or, in the absence of local codes, with the National Fuel Gas Code, ANSI Z223.1/NFPA 54, Natural Gas and Propane Installation Code, CSA B149.1. If you are connecting an appliance to a fixed fuel piping system specifying the use of a rigid pipe, semi-rigid tubing, and/ or a connector that complies with the standard for Connectors for Outdoor Gas Appliances and Manufactured Homes, ANSI Z21.75.CSA 6.27.

⚠ WARNING

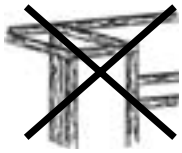

Cabinet frame, cabinet side panels and counter top must be made from non-combustible material.

⚠ WARNING

DO NOT store or use products with flammable liquids or vapors in the vicinity of the NewAge Grill Cabinet,NewAge Outdoor Kitchen cabinets or any appliances.

Note to Licensed Gas Fitter:

All built-in appliances must use rigid pipe, semi-rigid tubing, or a connector complying with the standard for Connectors for Gas Appliances, ANSI Z21.24. CSA 6.10, or Standard for Connectors for Outdoor Gas Appliances and Manufactured homes, ANSI Z21.75. CSA 6.27, for the appliance which are connected to fixed fuel piping system (Natural Gas).

⚠ WARNING

This grill is designed for non-combustible enclosures only, and must be installed and serviced by a licensed gas fitter to local codes.
As indicated on the rating plate, this gas grill is designed to operate with supply pressure of 7" WC for Natural Gas. For installations where the gas supply pressure exceeds these requirements, a regulator must be installed upstream of the grill's components. If the gas supply pressure is lower than these requirements, the unit will be under-fired and will not reach the maximum temperatures. Ensure that the supply line size complies with local and/ or national installation codes.

Installing Grill on custom built cabinet

CLEARANCES:

TO NON-COMBUSTIBLE CONSTRUCTION

A minimum of 4" (10 cm) clearance from the back of the grill to non-combustible construction is required to allow the hood to be opened fully.

TO COMBUSTIBLE CONSTRUCTION

This appliance should NOT be installed over, under or next to unprotected combustible construction. A minimum clearance to vertical and rear combustible material is 18" (45 cm) and 14" (36cm) on the sides.

The minimum vertical clearance to combustible materials means that ALL combustible materials must be outside this 18" (45cm) zone. As an example, if you have an island with a stucco or tiled surface and wood-frame construction beneath, the wood is considered combustible, even though the grill is touching the stucco or tile surface, which is non-combustible. In extreme circumstances, the wood could potentially get hot enough to burn.

VENTILATION OPENINGS

A minimum of three 10 in^2 (65 cm^2) of ventilation openings must be provided at the bottom of both left and right sides of your enclosure (island), as well as the back side. A minimum of three 20 in^2 (130 cm^2) of ventilation openings must be provided at the top of both left, right and back sides of your enclosure (island) where the top of the opening aligns with the bottom of the grill cut-out. These openings are required to safely dissipate gas vapors if there is a leak in your enclosure.

CUTOUT DIMENSIONS FOR INSTALLING GRILL ON A CUSTOM BUILT CABINET

Cutout Dimensions				
	SKU	**W**	**D**	**H**
33" Grill	66980 66990	31.5"	22.3"	11.2"
36" Grill	66981 66991	34.5"	22.3"	11.2"
40" Grill	66982 66992	38.5"	22.3"	11.2"
Side Burner	66983 66993	15.3"	22.4"	11.3"

Installing Grill on custom built cabinet

Layout for Non-combustible enclosure

⚠ WARNING

- **The upper vent opening must be at least 20 square inches.**
- **The lower vent opening must be at least 10 square inches.**

Note: Avoid abrasion of hose against the opening. It is recommended to use a rubber grommet at the opening.

Rubber grommet
2.375" Dia

NON-COMUSTABLE MATERIAL

H

D

W

H1

W1

MINIMUM 20 SQ IN (130 SQ CM) OF VENTILATION REQUIRED ON EACH END OF CABINET.

5"
[127mm]
MAXIMUM

MINIMUM 10 SQ IN (65 SQ CM) OF VENTILATION REQUIRED ON EACH END OF CABINET.

1"
[25.4mm]
MAXIMUM

PARTITION TO ISOLATE CYLINDER FROM GRILL

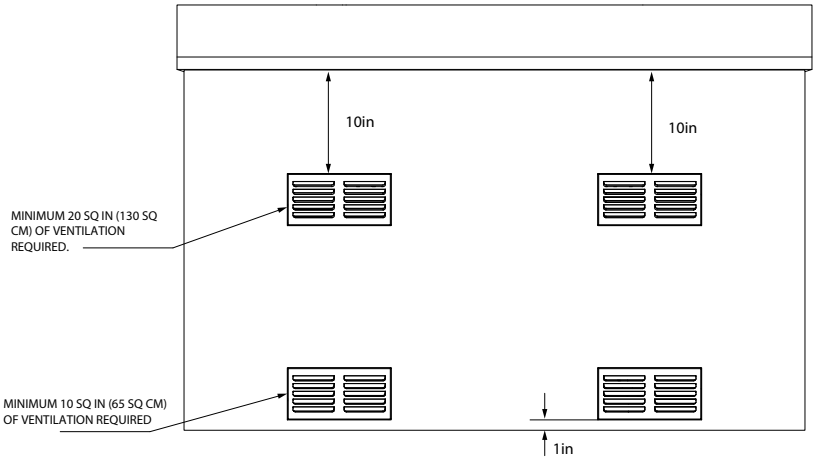

Back View

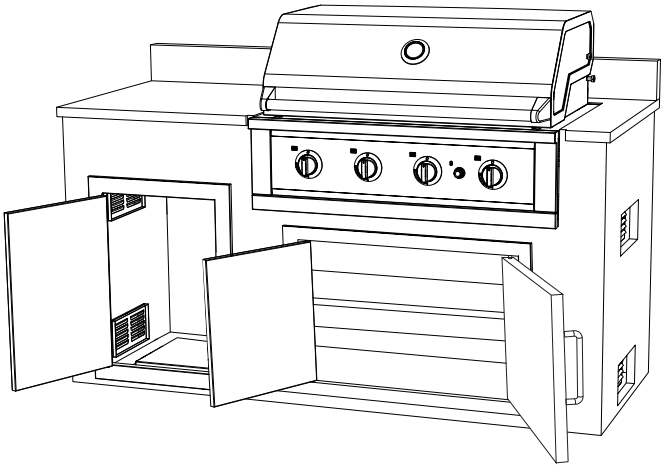

NOTE: These illustrations are for reference purpose only. Actual built-in cabinets and installation may differ.

Natural Gas Installation

Rigid Connection in a Built in Enclosure

⚠ WARNING

Only licensed gas fitter must perform the required gas fitting on NewAge gas appliances.
To ensure satisfactory performance, the gas supply line must be sized to accommodate the total BTU/h requirements of all the gas-fired equipment that will be connected to that line.
In no case should pipe less than 3/4" inside diameter or 1" outside diameter ever be used to connect this product.

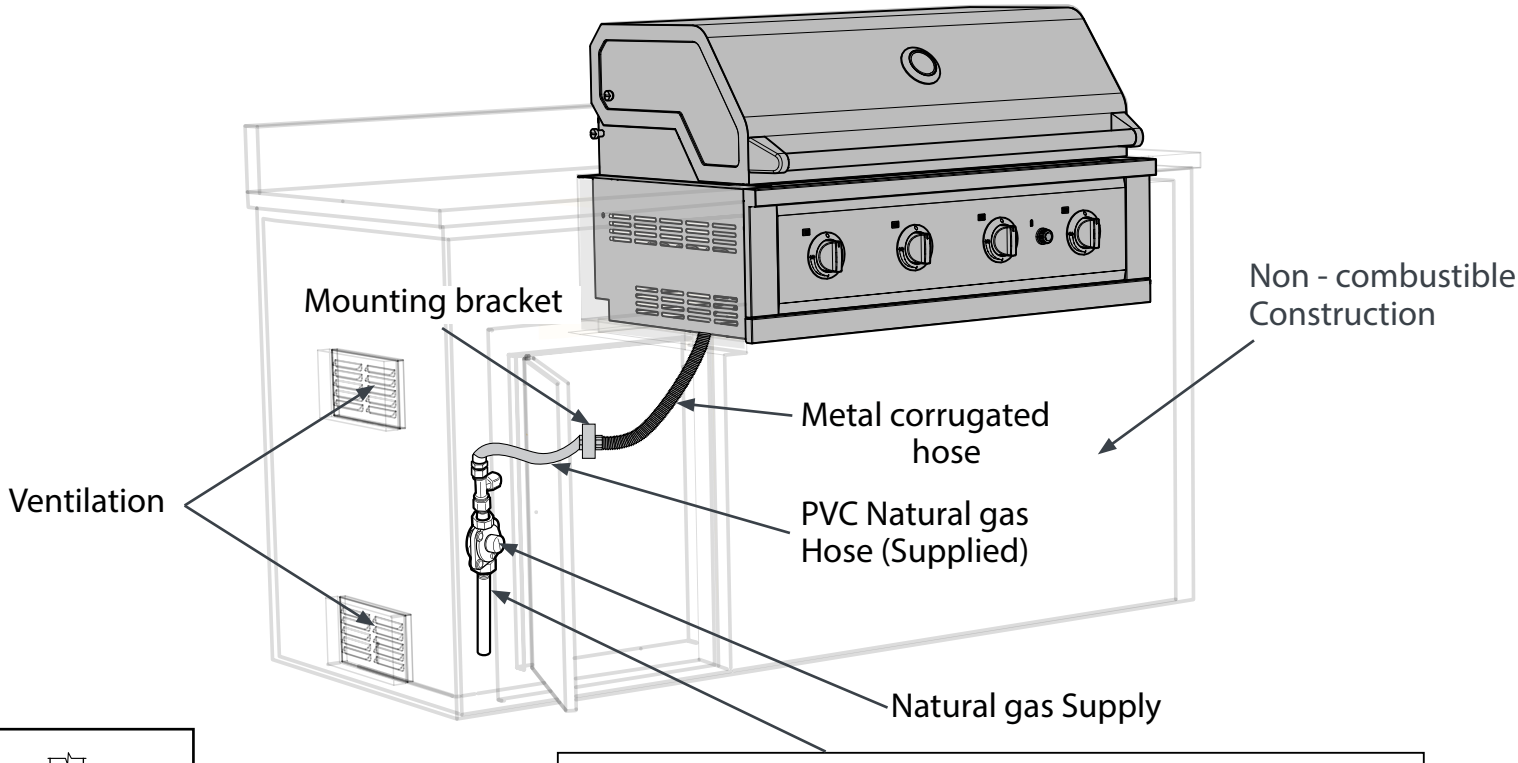

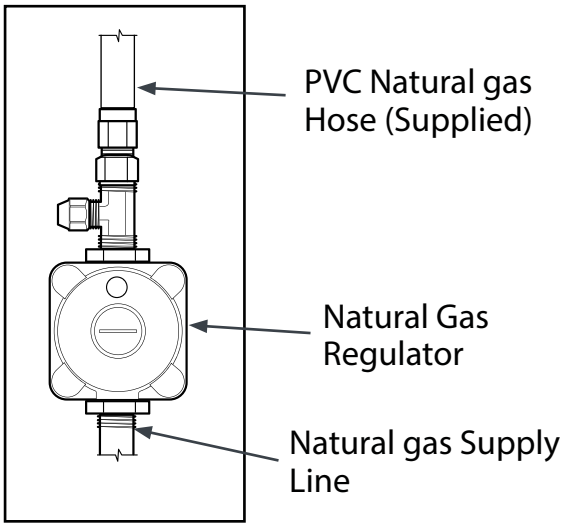

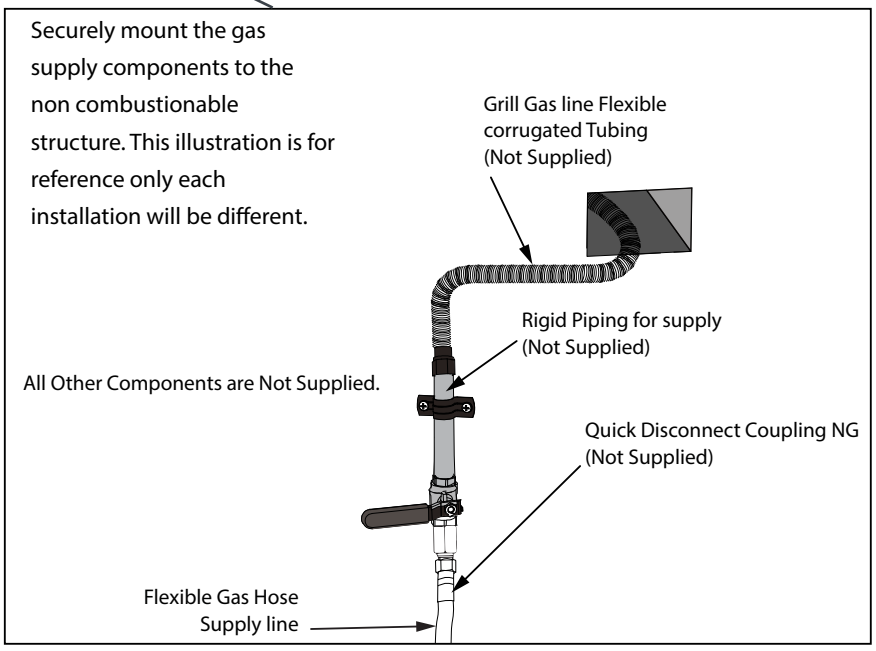

Assembling the Grill

Tools and Parts needed.

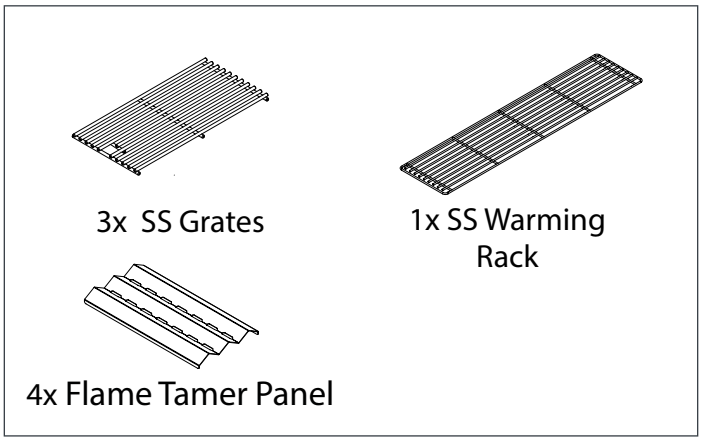

1. Install Flame Tamer Panel on top of the burner.

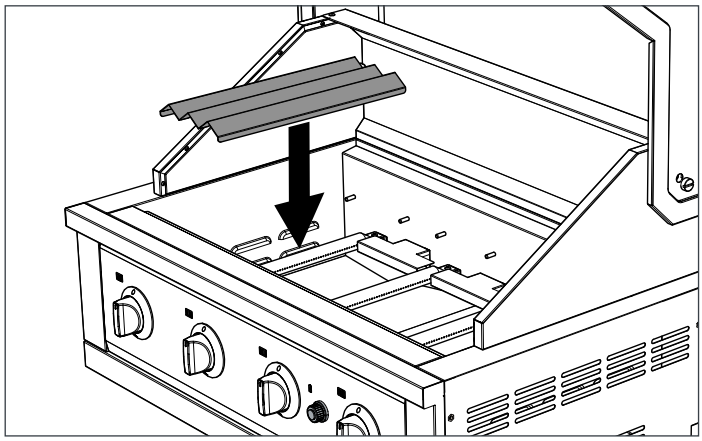

2. Make sure the Flame Tamer Panel sits properly on the dowel pins as shown below.

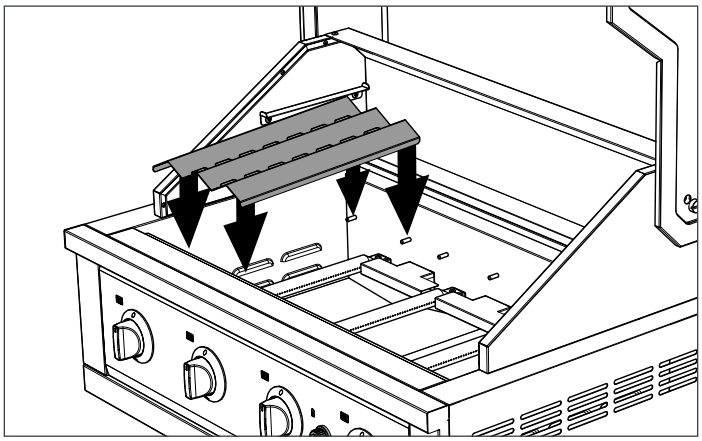

3. Similarly, install the remaining Flame Tamer Panels .

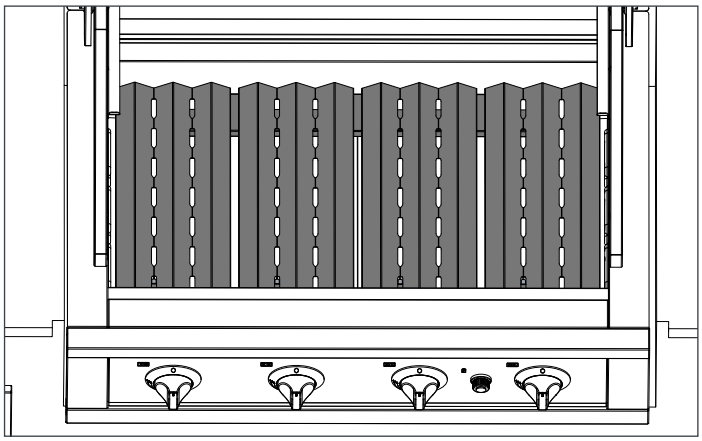

4. Install the three cooking grates on top of the Flame Tamer Panels as shown.

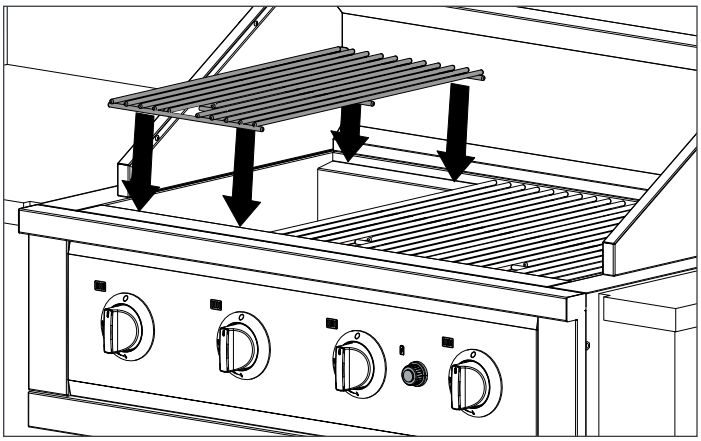

5. Install the warming rack, by placing it on the provided brackets.

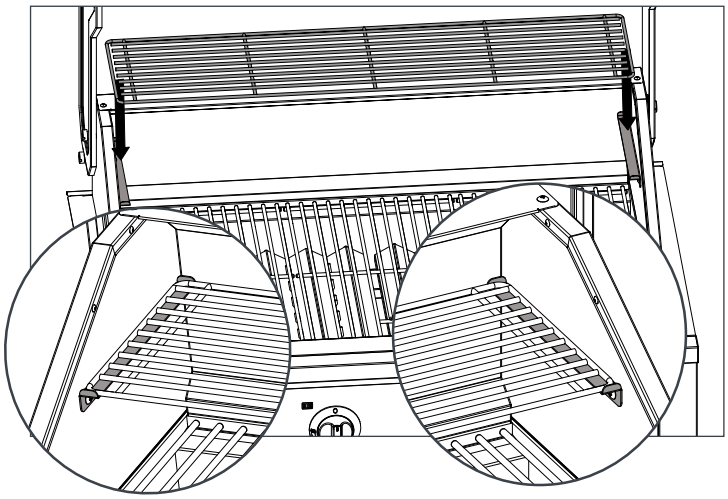

Assembling the Grill

6 Insert the AA battery cell into the Flame Igniter Battery Case. Then enclose it by tightening the Knob on the given threads in clockwise direction as shown.

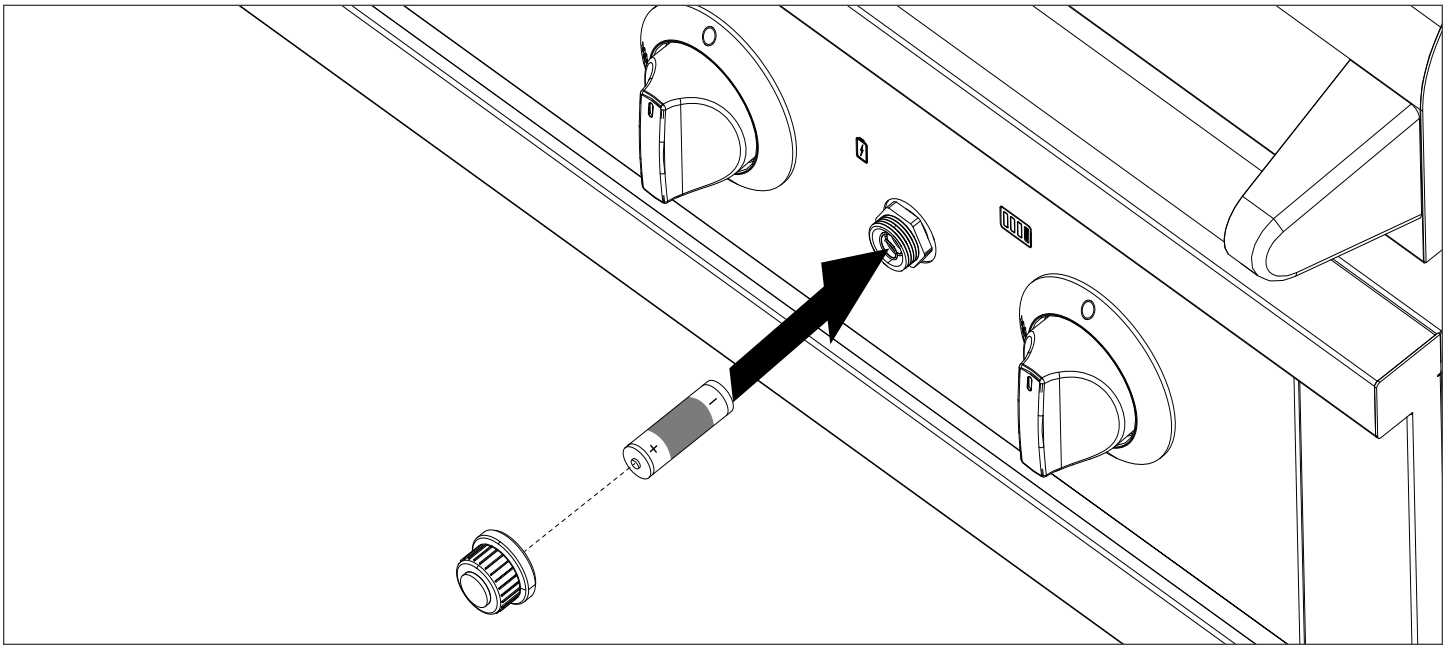

NOTE: AA Battery is not included with package.

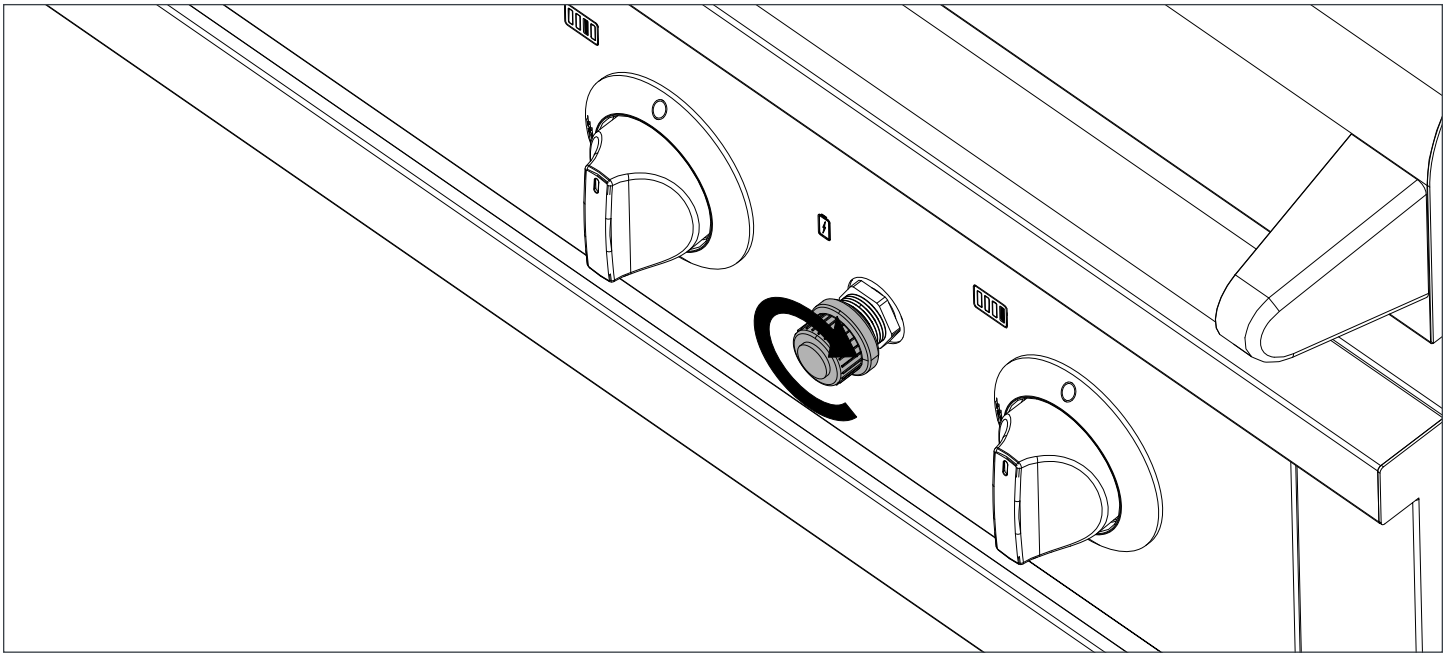

Optional Accessories

Installing the Griddle

1 Place the Griddle on top of the cooking grates as shown below.

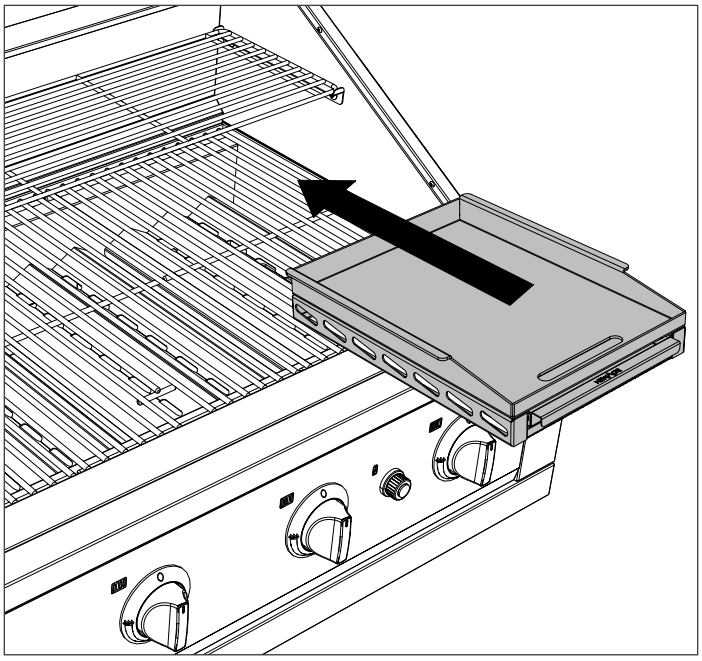

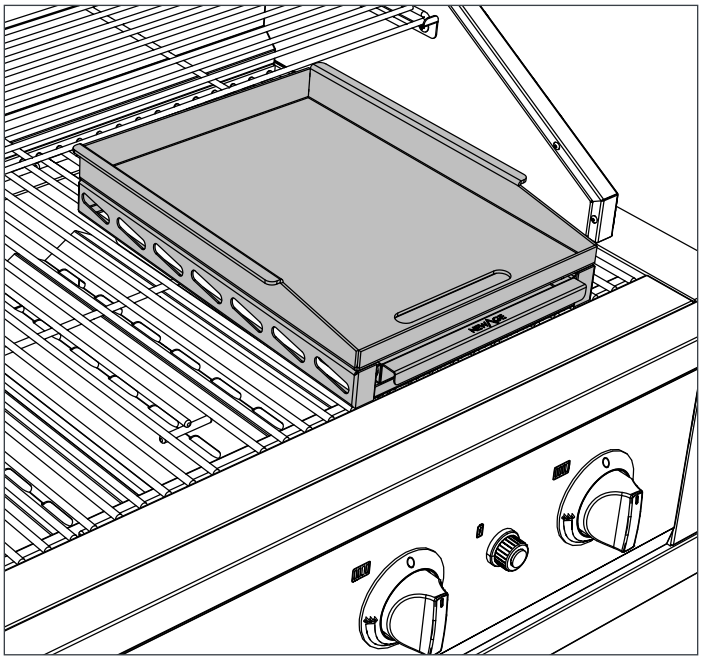

Grease pan can be slide in or out from the griddle to remove the grease collected.

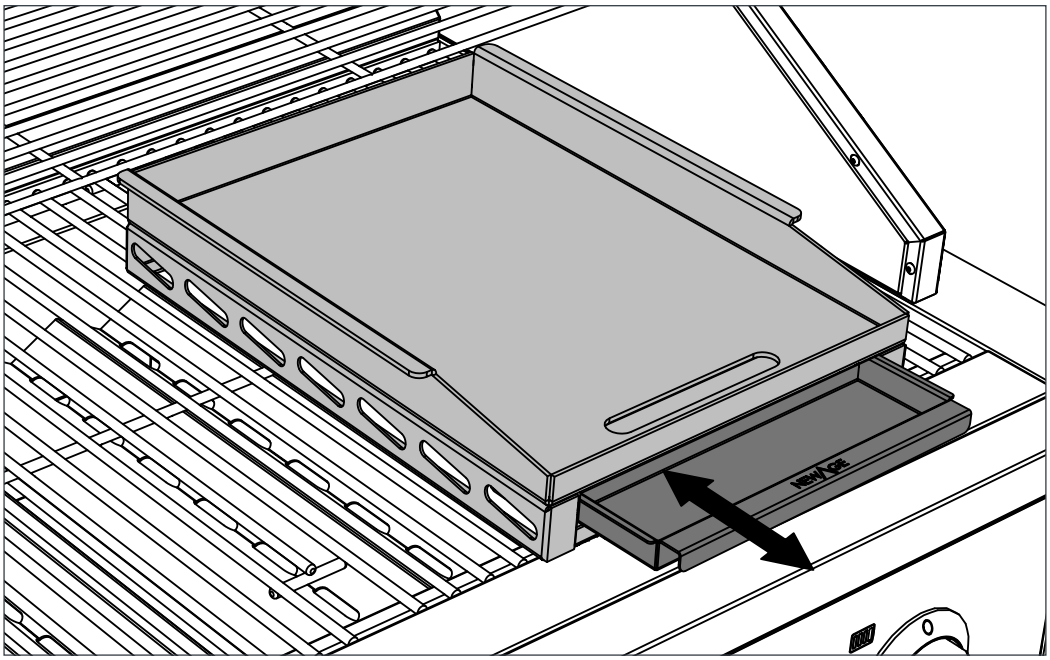

⚠ WARNING

- During the usage the griddle gets extremely hot and must be handled with care. Make sure to let the griddle cool down for minimum 30 minutes before removing the grease pan for cleaning.
- Do not close the lid when you are cooking on the Griddle.
- • Do not over fill the grease tray and clean it after each use.

Optional Accessories

Installing the Smoker Box

NOTE

- **Do not put more than 0.2 Kg (0.4 Lbs) of wood chips in the smoker box for smoking.**
- **Do not pour more than 1/2 litre of liquid for moisturing the meat.**
- **Do not place smoker box on top of the sear burner.**
- **For good smoke performance, soak the wood chips for not less than 30 minutes, drain excess liquid and fill the smoker tray completely.**
- **To improve smoke performance, keep the hood closed as much as possible while food is grilling.**

⚠ WARNING

If not thoroughly soaked, the wood chips will flare up during grilling. To extinguish flame, turn off the valves, open the hood and let the fire stop.

WOOD TYPE	FLAVOR	SMOKE INTENSITY	GREAT FOR					
			BEEF	CHICKEN	PORK	SEAFOOD	BAKED	VEGETABLE
Apple	sweet smoke			•	•		•	•
Maple	Hearty smoke		•		•		•	•
Alder	Tart smoke		•	•	•	•	•	•
Pecan	Rich, sweet, versatile		•	•	•		•	•
Oak	Heavy smoke		•			•	•	
Hickory	Heavy smoke		•	•	•			•
Mesquite	Heavy smoke		•	•		•		
Grapevine	Strong smoke		•	•	•	•		

1 Place the smoker box on grill grates in desired location.

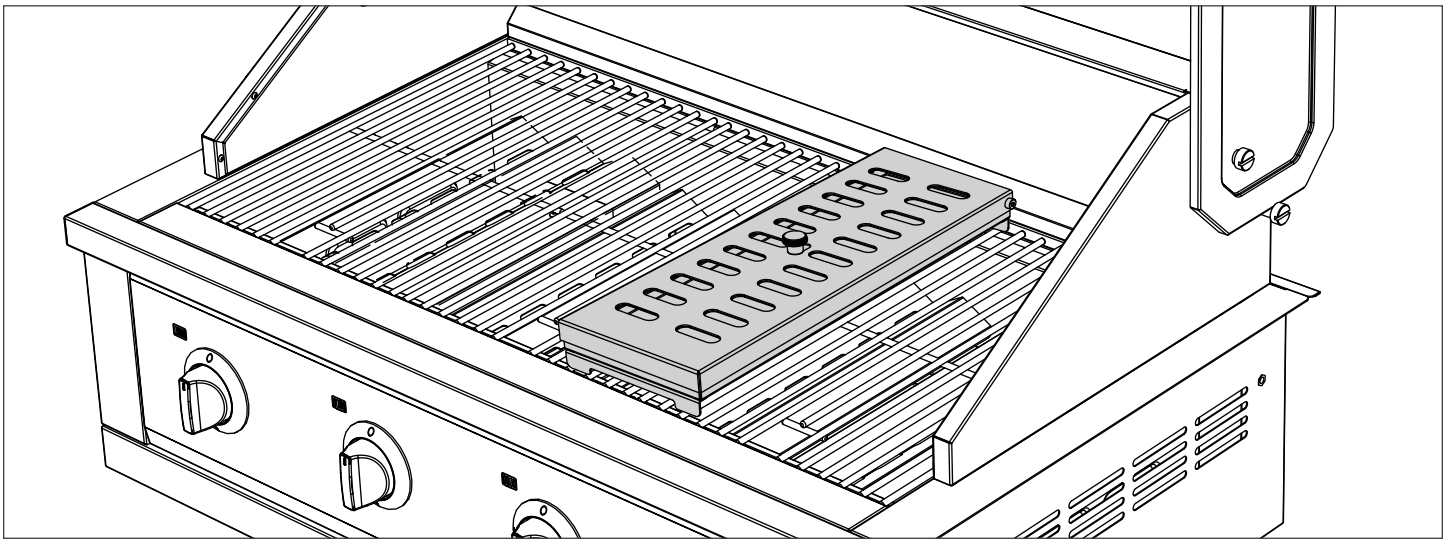

Optional Accessories

Installing the Smoker Box

Open the smoker box to add wood chips or any beverage.

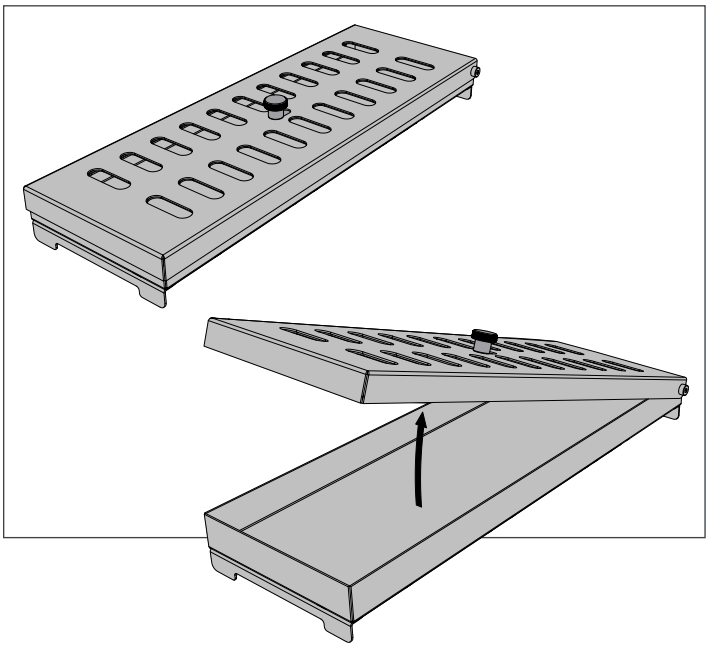

Smoke vents can be adjusted by sliding the knob to control the smoke intensity.

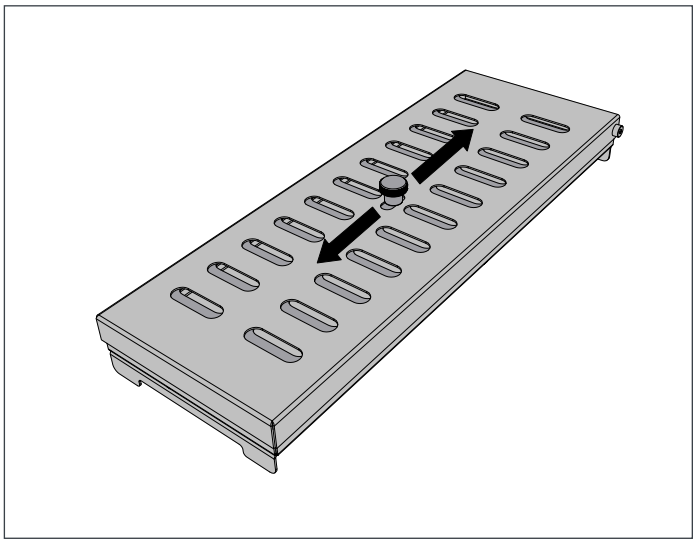

Gas Connections

⚠ WARNING

Never connect a gas line directly to the grill. A pressure regulator must be installed on all gas equipment. Removing or failing to install the pressure regulator can result in fire, and serious personal injury and will void the warranty. This grill is designed for non-combustible enclosures only, and must be installed and serviced by a licensed gas fitter to local codes.

As indicated on the rating plate, this gas grill is designed to operate with gas supply pressures of 7" WC for Natural Gas. For installations where the gas supply pressure exceeds these requirements, a regulator must be installed upstream of the grill's components. If the gas supply pressure is lower than these requirements, the unit will be under-fired and will not reach the maximum temperatures. Ensure that the supply line size complies with local and/or national installation codes.

The grill is factory set to use natural gas (NG). It is critical that the gas you use matches that which the grill was set up for. You can verify that by checking the rating plate.

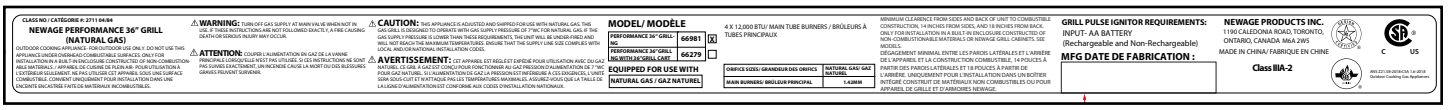

Rating Plate - Lists model numbers and gas type

Water Column Requirements

Fuel	WC Min Under Full Load
NATURAL GAS	7 in wc (NG)

The rating plate is located in one or more of the following places:

- On the back of Grill

Ensure that the gas supplied meets with the minimum pressure requirements. Do not operate the grill on any gas other than that for which the grill has been set.

Both the regulator and the manifold orifices have been tuned for the type of gas specified on the rating plate.

All installation and all installation parts must conform to local codes with the National Electrical Code, ANSI Z223.1/ NFPA 70 latest edition and the National Fuel Gas Code, ANS Z223.1/NFPA 54 in the U.S. and CGA-B149.1/.2 in Canada. Canadian installations must conform to CGA-B149.1/.2 natural gas/propane installation code. (Canada)

Instructions for Installer (Licensed Gas Fitter)

Gas Line Purging

You should purge the gas line of air before attempting to light the grill.

- Make sure all grill controls are in the "OFF" position.
- Slowly turn on the main gas supply.
- Open the lid for the entire purging procedure.
- Push in the control knobs (do not turn) for the Sear Burner and the Main Burner on the furthest right for about 20 seconds to allow the air in the system to purge. These are furthest from the fuel source and will completely purge the lines. Release the control knobs. Wait at least 5 minutes after releasing the control before attempting to light the burners. (applicable with 40" Grill 2.0 only).

Gas Hook-Up Instructions

The piping up to the gas grill is the responsibility of the licensed gas fitter and piping should be located as shown in the built-in instructions. It must be connected with rigid pipe, copper tube or an approved flexible metal connector which complies with ANSI Z21.24/ CSA 6.10 or ANSI Z21.75/CSA 6.27.

The installation must comply with CAN B149.1 Natural Gas and Propane installation code in Canada, or to the National Fuel Gas code, ANSI Z223.1 in the United States. The gas supply pipe must be sufficiently sized to supply the BTU/h specified on the rating plate, based on the length of the piping run. If installing a side burner, a separate line must be branched off to the side burner unit and enter the side burner opening at the specified location. The enclosure must be ventilated according to local codes, and must not have communication with the cavity used to enclose the gas grill.

CUSTOM BUILT IN ENCLOSURE VENTILATION REQUIREMENT

1. At least one unobstructed ventilation opening on the exposed exterior side of the enclosure located within 5 in (127mm) of the top of the enclosure. The opening must have a total free area of more than 20 in2 (130 cm2).
2. At least one ventilation opening on the exposed, exterior side of the enclosure located 1 in (25.4 mm) or less from the floor level. The opening must have a total free area of more than 20 in2 (130 cm2). The upper edge must be no more than 5 in (127 mm) above the floor level.

Every opening must be large enough to permit the entrance of a 1/8 in (3.2 mm) rod.

The enclosure must be designed so that the gas hose can be connected, disconnected and the connections inspected and tested outside the enclosure. All connections must be accessible for testing inside the enclosure.

Natural Gas Installation

⚠ WARNING

Only licensed gas fitters must perform the required gas fitting on NewAge gas appliances.
To ensure satisfactory performance, the gas supply line must be sized to accommodate the total BTU/h requirements of all the gas-fired equipment that will be connected to that line.
In no case should pipe less than 3/4" inside diameter or 1" outside diameter ever be used to connect this product.

- Calculate the total BTU output of all equipment and refer to Gas Supply Line Runs for allowable run distances for ¾ inch pipe. Failure to meet these minimum requirements may reduce performance of the grill and any other appliances running on that supply line.
- Always keep supply line runs as short as possible.
- A gas shut-off valve must be installed in an easily accessible location by a licensed gas fitter.
- The outdoor cooking gas appliance and its individual shut-off valve must be disconnected from the gas supply piping system during any pressure testing of that system at test pressures in excess of 0.5 psi (3.5 kPa).
- The outdoor cooking gas appliance must be isolated from the gas supply piping system by closing its individual manual shut-off valve during any pressure testing of the gas supply piping system at test pressures equal to or less than 1/2 psi (3.5 kPa).
- Keep threading compound off of the first two pipe threads to avoid having any small pieces of compound break loose and clog a burner valve or orifice. Do not use threading compound on any flare fittings.

For built-in installations, it is recommended that any flexible pipe used be kept as short as possible.

For freestanding units using natural gas, NewAge strongly recommends using a quick disconnect kit. This Quick Disconnect kit, is included with purchase.

Note:

This product must be installed by a licensed gas fitter when installed within the State of Massachusetts.

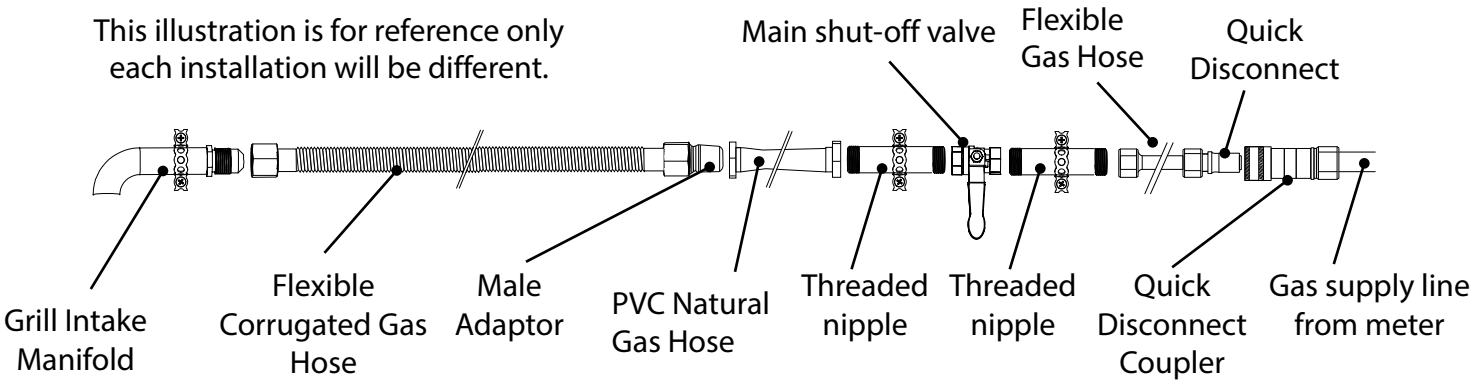

Natural Gas Installation

1. Connect one end of Metal Corrugated extension hose to the manifold at the bottom and other end to the natural gas hose from the inside of the cabinet. Feed the Natural Gas through cutout hole on back panel.

2. Connect PVC Natural Gas hose end to Natural gas supply using the quick connect fitting.

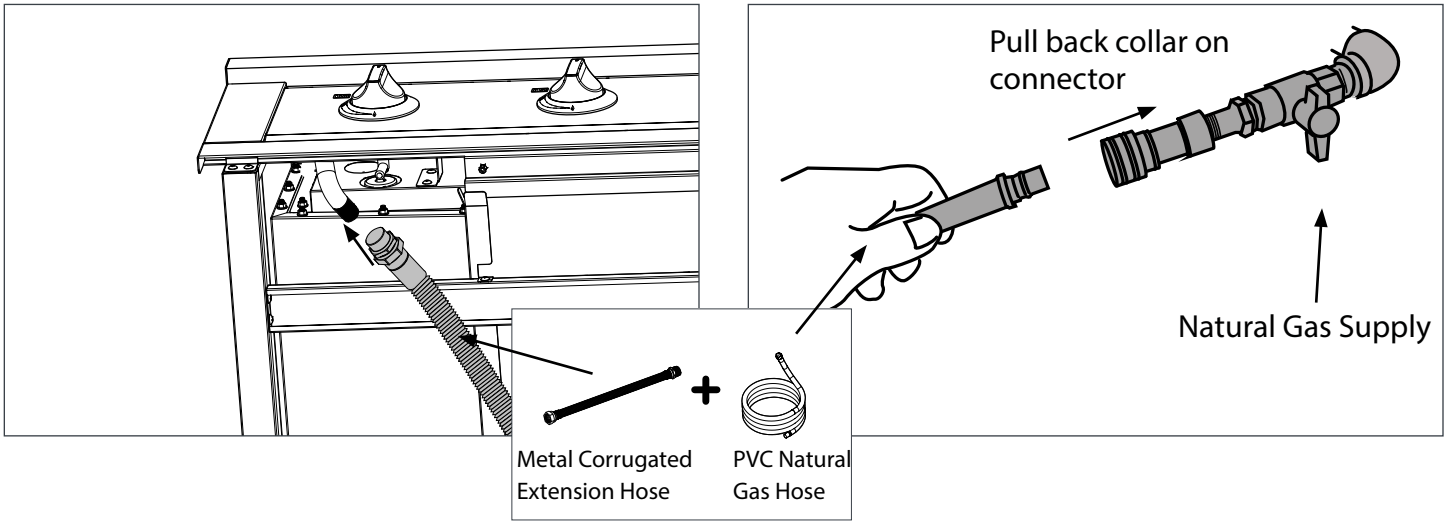

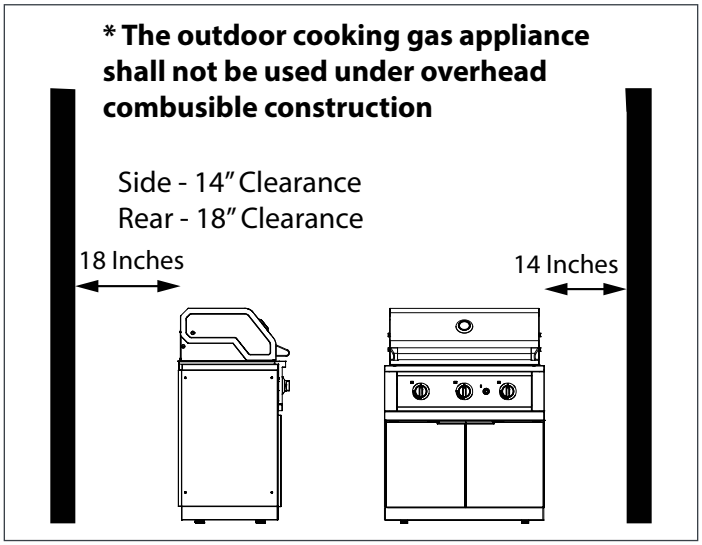

⚠ WARNING

Gas appliance shall not be used under overhead combustible construction.
The grill and cabinet must have a minimum clearance from combustible materials.
Refer to the illustration for dimensions.

⚠ WARNING

- **Never install this product into a combustible enclosure without an insulated jacket. Doing so could result in fire, property damage and personal injury.**
- **Never locate the grill under a roof or overhang, in a building, garage, shed or other such enclosed area.**
- **Never locate the grill under unprotected combustible construction.**
- **Installation must conform with local codes or, in the absence of local codes, with either the National Fuel Gas Code, ANS Z223.1/NFPA 54, Natural Gas and propane Installation Code, CSA B149.1, or Propane Storage and Handling Code, B149.2, in Canada.**

Leak Testing Instructions

⚠ WARNING

This must be done before initial use, annually, and whenever any gas components are replaced or serviced. Do not smoke while performing this test, and remove all sources of ignition. See Leak Testing Diagram for areas to check. Never conduct a leak test using fire or flame. Sparks or open flames will result in a fire or explosion, damage to property, serious bodily injury, or death.

Testing a Gas Leak

Ensure all control knobs are in the off position.

Turn on the fuel supply.

- For natural gas, turn the valve handle 1/4 turn to align with the gas flow.

Brush or spray a half-and-half solution of liquid soap and water onto all joints and connections of the regulator, hose, manifolds and valves.

Bubbles will indicate a gas leak. IMMEDIATELY turn off the gas supply.
See next page for "Fixing a Gas Leak".

Natural Gas

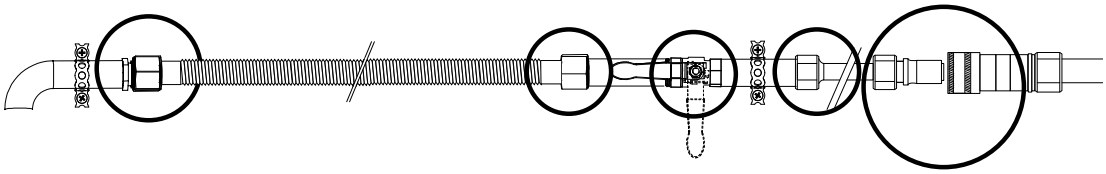

Spray
or
Brush

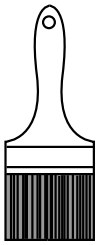

Leak Testing Instructions

Fixing a Gas Leak

- Shut off the gas supply.
- Turn all grill controls to the "ON" position to purge the grill of any gas build-up, then turn the controls back "OFF".
- Wash off the soapy solution with cold water and dry.
- Tighten the loose joint, or replace the faulty part with manufacturer-recommended replacement parts.
- Repeat the leak test to ensure that no leaks are present.
- If the leak cannot be stopped, immediately shut off the gas supply, disconnect it, and have the grill inspected by a licensed gas fitter or dealer. Do not use the grill until the leak has been corrected.

AA Battery Maintenance

⚠ WARNING

- **You must read following instructions before using AA dry cell batteries for Grill. Failure to read and follow the below instructions may result in fire, personal injury and damage to property if used improperly.**
- **DO NOT insert an old/used AA dry cell battery into the battery pocket of the Pulse Igniter.**
- **Always store AA battery in its original brand packaging, or place them in a plastic container.**
- **Keep batteries in a cool location with low humidity and make sure they are aligned in the same polarity direction.**
- **In case of rechargeable AA dry cell battery, NEVER make wrong polarity connection while charging and discharging the battery.**
- **By any type of misuse, the harmful chemicals inside the battery may come out and could damage the battery pocket of the Pulse Ignitor.**
- **DO NOT place or insert flammable chemical or material inside the Pulse Igniter battery pocket for cleaning purpose. Any type of chemical or flammable material in the vicinity of the Grill may cause dangerous fire at the location Grill is placed.**
- **DO NOT direct contact the chemical in case it is spilled out of the battery pocket. It could be allergic to human body.**

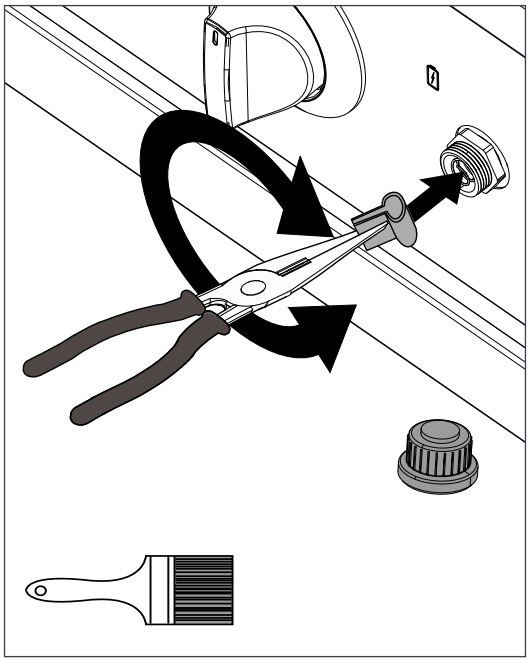

Cleaning the battery pocket of the Pulse Ignitor :

Cleaning the battery pocket is a must when the battery doesn't work properly or battery chemicals are observed spill out from the case. Always keep all the burner knobs and fuel source valves to OFF position before starting cleaning process of the battery pocket.

1. Read carefully the "Leak Testing Instructions" and the "Safe Operating Practices" sections with proper attention.
2. Make sure all control knobs are set to OFF position.
3. Rotate the Pulse Igniter knob in anticlockwise direction and take out the AA dry cell battery.
4. Using a clean brush or clean cloth, remove the debris, decomposed black carbon on the spring and inner faces as shown.
5. Insert a new AA battery with correct polar positioning (Positive and Negative poles) of the battery as shown in "Assemble the Grill".
6. Enclose the AA battery pocket of the Pulse Ignitor using the knob and tighten it by rotating in clockwise direction.

Pre-Grill Checklist

Before FIRST use ensure that:

1. All packaging, and packing materials have been removed from the Grill and burners
2. You have a fuel supply connected.
3. You need AA battery to operate the pulse igniter.
4. A licensed gas fitter has performed a leak test on all the fittings that supply the fuel to the grill.
5. If your Grill does not light in 4-5 seconds you may need to purge the line. (refer to purging the line)
6. Before cooking on your gas grill for the first time a burn-off needs to be done. This is a one time only procedure and gets rid of any odors or foreign matter caused by the manufacturing process. To do this open the lid and ignite the burners, close the lid and operate on "MAX" for 5-10 minutes. You may then either set the controls to "OFF" or cook on your grill immediately by turning the control knobs to a lower setting.

⚠ WARNING

- **Never attempt to light a burner if you smell gas.**
- **Always keep the lid open when lighting your grill.**
- **Releasing fuel into a closed grill before lighting will increase the risk of explosion, property damage, personal injury or death.**
- **Keep your face and body as far from the grill as possible when lighting. Any time a burner doesn't light within 5 seconds, turn off the control, wait 5 minutes for gas to dissipate, and repeat the lighting procedure.**
- **NEVER LEAVE THE GRILL UNATTENDED WHILE COOKING.**

Before Each Use:

Aways make sure that:

1. You do not smell gas before you light the grill. If you do smell gas, shut everything off and have a licensed gas fitter check for leaks.
2. The cooking area is free and clear of any combustibles, that might ignite.
3. You know where the main gas supply shut-off is located.
4. The burners are seated properly in the grill. The main burners must sit level and firmly on the burner mounting support frame.
5. Wind is not blowing too strongly or blowing on the back of grill.

Once a Season

- At the start of each new grilling season remove the grilling racks and check the burners, venturis, orifices and valves for obstructions.
- Spiders and insects often nest in these areas of the grill and can disrupt air flow, causing damage to the grill and personal injury.
- Also, check all hoses and fittings for damage, abrasion, wear and tear.

Lighting the Grill

⚠ WARNING

- **Always keep the lid open when lighting the grill.**
- **Never leave children unsupervised around the NewAge grill. Do not store items of interest to children around or below the grill, or in the cabinet. Never allow children to crawl inside a cabinet or enclosure.**

⚠ CAUTION

- **Never light the grill if you smell gas.**
- **Keep face and body parts away from the grill when lighting. If burner fails to light after 5 seconds, turn off the burner, wait 5 minutes then repeat the lighting procedure.**
- **Do not leave the grill unattended.**

Grill Control Layout

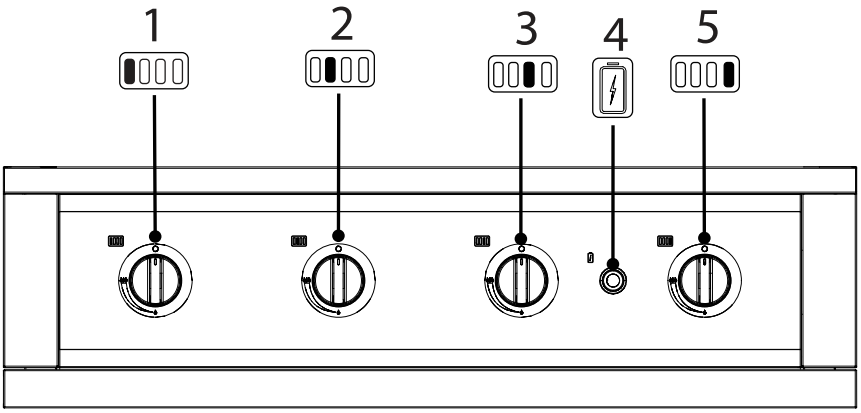

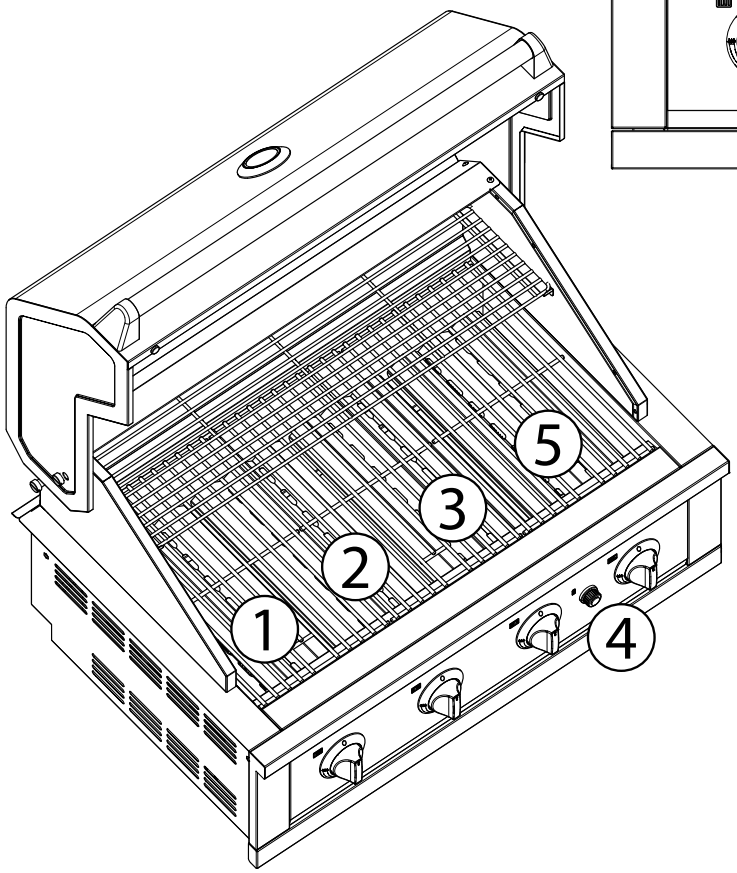

1. Main Burner - Left
2. Main Burner - Middle 1
3. Main Burner - Middle 2
4. Electric Ignition Module - Pulse Ignitor
5. Main Burner- Right

Lighting the Grill

⚠ NOTES

- **Any of the Burners can be lit first using the Pulse Ignitor/ Match. It is upto the customer preference and requirement.**
- **If Burners does not light or flame is too low, you may have spider or other insect blockage inside or vicinity of the burner holes. See "Replace the Burners" section.**
- **The IR burner lighting process is similar to that of Main Burners.**

Method 1 (Using Pulse Ignitor Button):

1. Read and complete PRE-GRILL checklist.
2. Open lid before lighting burner.
3. Make sure all control knobs are in the "OFF" position.
4. Turn the control knob for the Burner to the "HIGH" position.
5. Press the Pulse Ignitor button and hold for 3–5 seconds to light burner.
6. If ignition does NOT occur in 5 seconds, turn control knob to "OFF", wait 5 minutes to allow gas to dissipate and repeat lighting procedure.
7. To turn off, turn each control knob clockwise until it locks in the "OFF" position. This does not turn off the gas flow from the cylinder.
8. Once the grill is lit, adjust the temperature using the Max -to- Min settings.

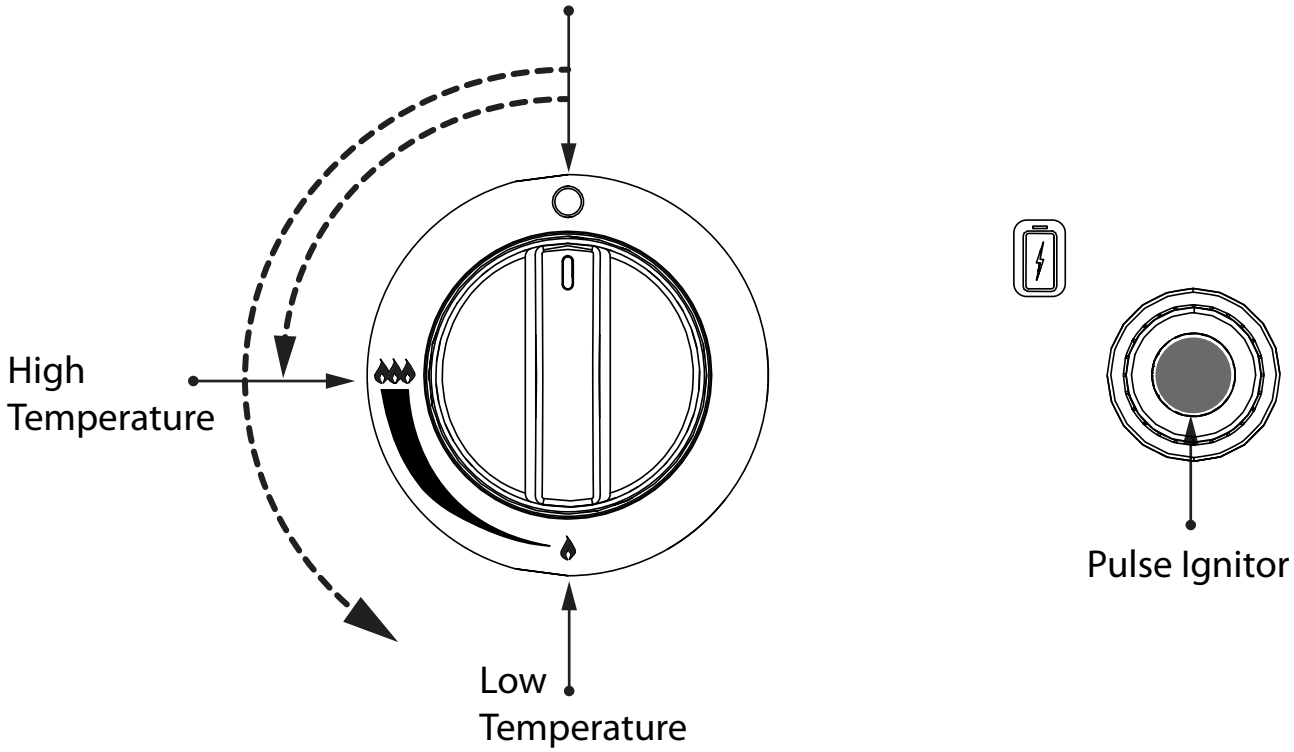

Lighting the Grill

Method 2 (Access Holes):

If the burners fail to light after a couple of attempts, it can be lit using the supplied match lighting stick. Follow the steps below for manual grill lighting.

1. Read and complete PRE-GRILL checklist.
2. Make sure all control knobs are set to OFF.
3. Always light grill with lid open.
4. Turn fuel supply ON.
5. Place a match in the aligator clip on the match holder and light the match.
6. Guide the match holder, with lit match, through the access holes on the Flame Tamer Panel and adjacent to the burner.
7. Push the corresponding control knob in and turn it to HIGH to ignite the left burner. Check that the flame is lit by looking through the cooking grates. You should see a flame.
8. Repeat step 5 to 7 for the remaining burners. If any of the burners fails to ignite during the lighting process, within five seconds, stop, turn the burner control knob to OFF and wait five minutes to allow the gas to clear before you try again.

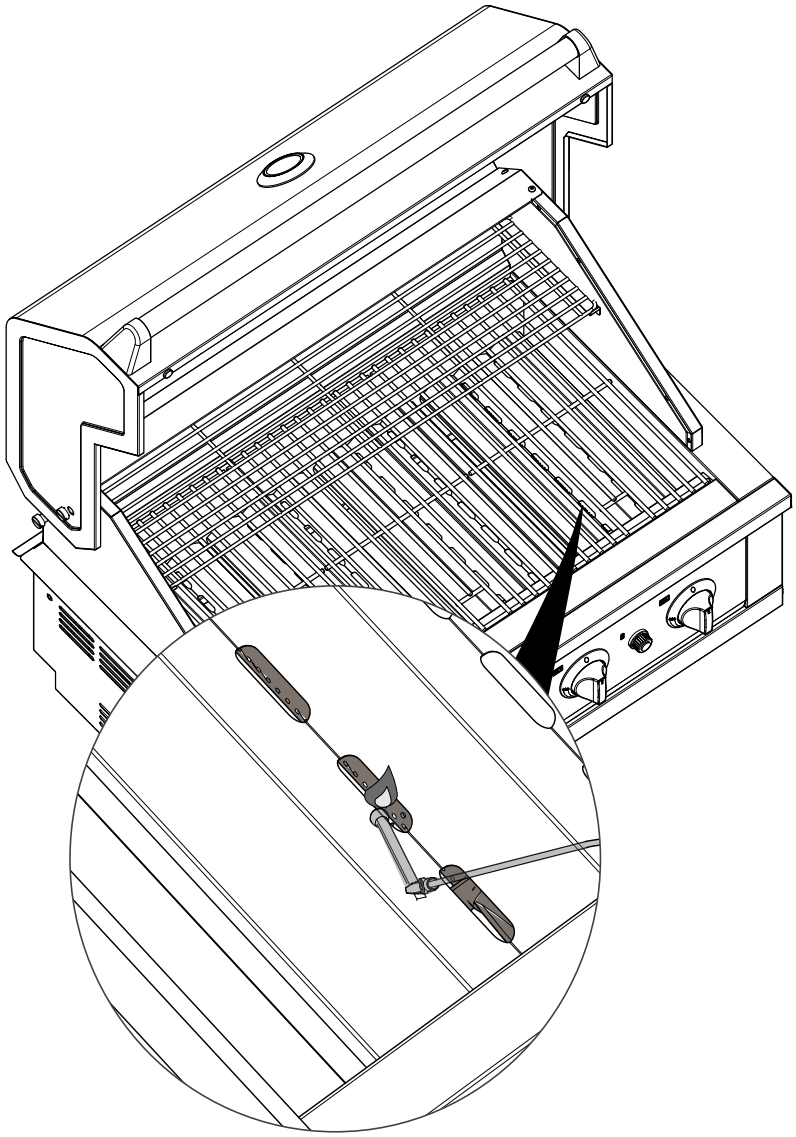

Burner Position and Flame Adjustment

⚠ CAUTION

Proper placement of each burner is critical after cleaning they must be centered on the brass orifice, resting level without any rocking. Failure to meet these conditions may cause a very dangerous condition that can cause personal injury and property damage.

Gas control knobs should be in the 'OFF" position, and fuel line should be disconnected from gas valve manifold. To reduce the chance of FLASHBACK, the procedure below should be followed at least once a month or when your grill has not been used for an extended period of time.

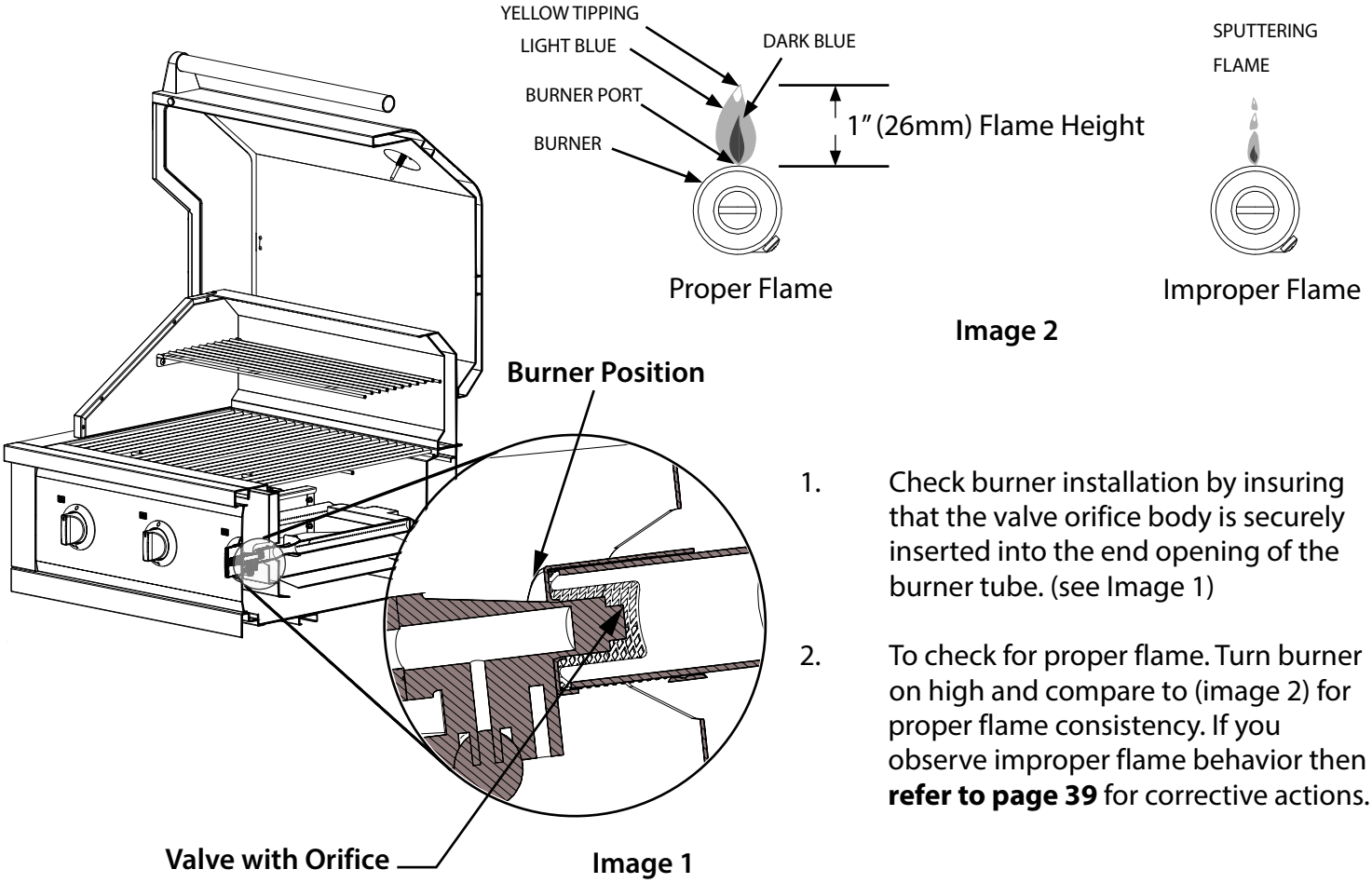

Image 2

Image 1

1. Check burner installation by insuring that the valve orifice body is securely inserted into the end opening of the burner tube. (see Image 1)

2. To check for proper flame. Turn burner on high and compare to (image 2) for proper flame consistency. If you observe improper flame behavior then **refer to page 39** for corrective actions.

⚠ CAUTION

Turn off gas at source and disconnect the unit before servicing. To avoid the possibility of burns, maintenance should be done only when the grill is cool. A leak test must be performed annually and whenever any component of the gas train is replaced or gas smell is present.

Burner Position and Flame Adjustment

Adjusting the Airshutter valve

To adjust the flame properly the air shutter valve needs to be adjusted to achieve an optimum gas and oxygen mixture for burning. The burner has to be removed for adjusting the air shutter valve.

1. Loosen the bolts (A) and remove burner from the grill.

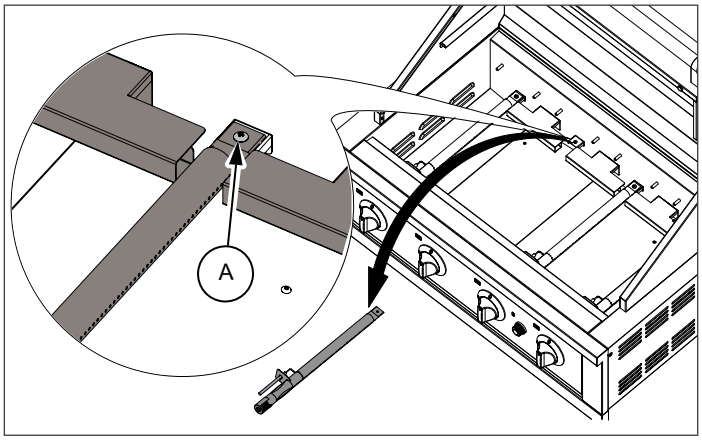

2. Loosen the screw on the air shutter valve and turn the air shutter valve to change the air opening.

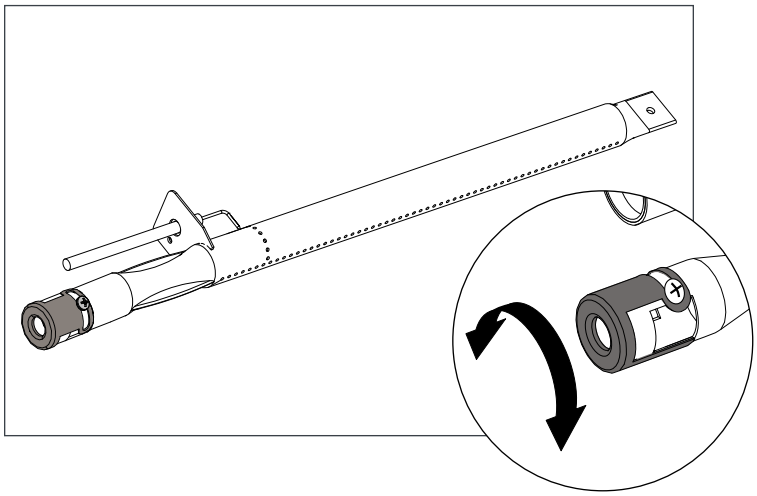

Improper Flame

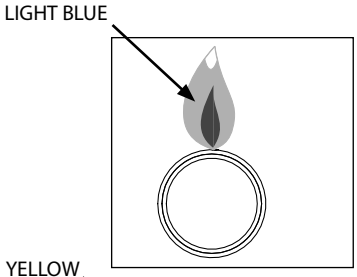

Too much Oxygen

If the flame is not touching the burner, more oxygen is supplied to the fuel than required. Turn the air shutter valve clockwise to reduce the opening.

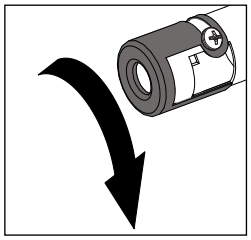

No Oxygen

If the flame color is yellow, less oxygen is supplied to the fuel than required. Turn the air shutter valve counter clockwise to increase the opening.

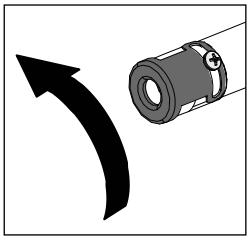

Proper Flame

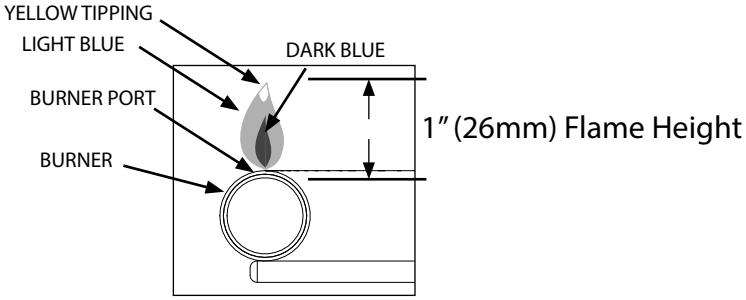

Flame at "HI" setting

Burner Position and Flame Adjustment

Low Flame Adjustment

⚠ CAUTION

1. **Make sure that the Grill is not hot.**
2. **Remove the Remove the Cooking grate and Flame Tamer so you can see the flames while adjusting the burners.**
3. **Fluctuations in gas pressure, may affect burner performance at the "LOW" setting.**
4. **Quality of the gas; itself may affect burner performance at the "LOW" setting.**

1 Turn the burner to "LOW" setting.

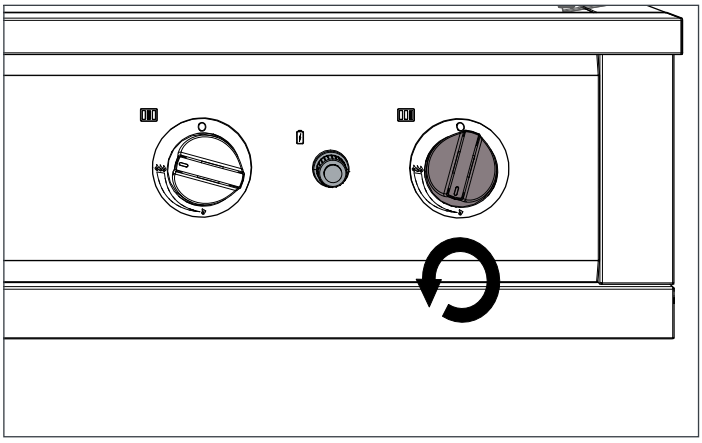

2 Pull off the control knob from the panel.

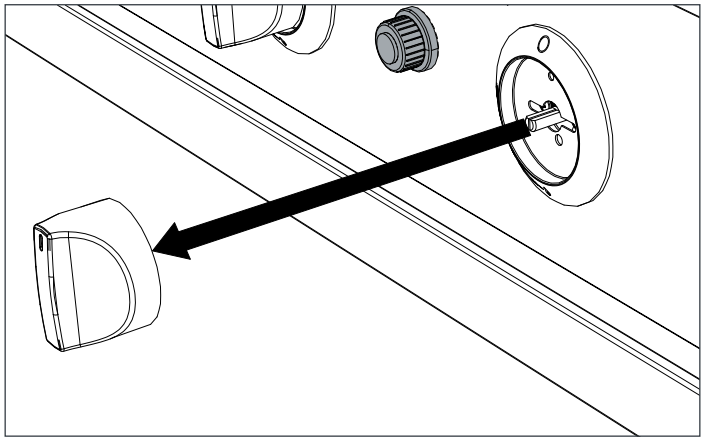

3 Insert a small flat screwdriver into the hole.

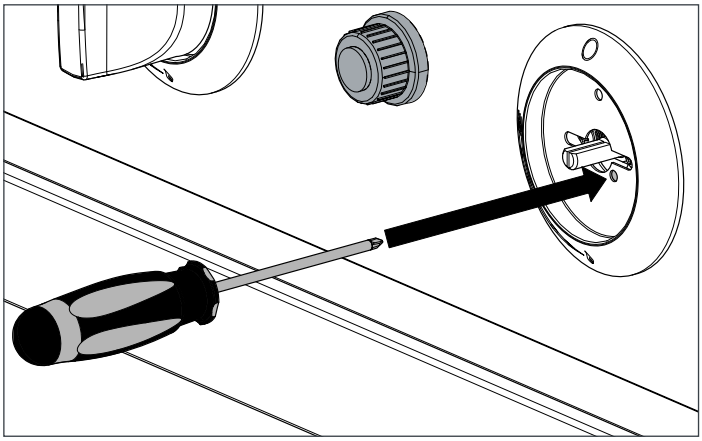

4 **Counter-clockwise direction**: HIGH Flame
Clockwise direction: LOW Flame

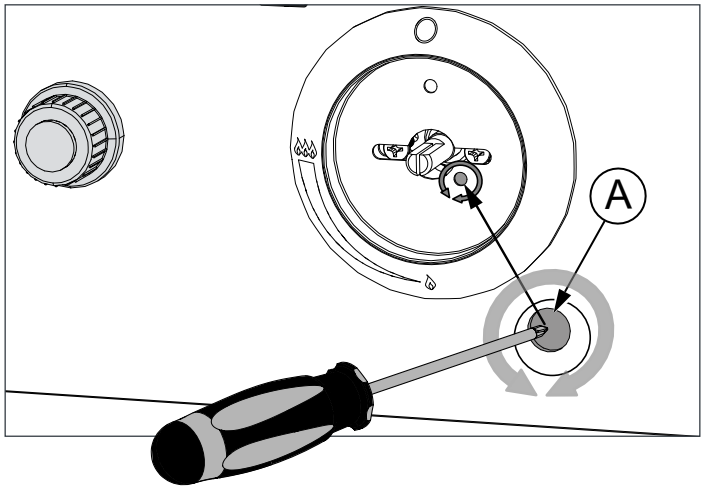

General Grill Operation and Cooking Procedures

⚠ WARNING

- **Never leave children unsupervised around the NewAge grill.**
- **Pre-heating for more than 15 minutes may overheat and cause damage to the grill.**
- **Never cover slots, holes, or passages in the grill fire box or cover an entire rack with material such as aluminum foil. Doing so blocks air flow through the oven and may cause carbon monoxide poisoning. Aluminum foil linings may trap heat causing a fire hazard.**
- **Do not leave the grill unattended.**

Preheating

It is necessary to preheat the grill for a short time before cooking certain foods, depending on the type of food and the cooking temperature. Pre-heating allows the Flame Tamers to properly heat up, providing more even and more consistent cooking results. Allow the grill to pre-heat on "HI" until desired temperature is reached. Use the hood thermometer to achieve required preheating temperature. There is no need to preheat for casseroles or other foods that require slow cooking.

Cooking Temperatures

HIGH Setting - Use this setting only for fast warm-up, for searing steaks and chops, and for burning food residue from the cooking grids after the cookout is over.
MEDIUM Setting - Use this setting for most grilling, roasting or baking, and for cooking hamburgers and vegetables.
LOW Setting - Use this setting for all smoke cooking, and when cooking very lean cuts such as fish.

These temperatures vary with the outside temperature and the amount of wind.

⚠ WARNING

Do not use the grill for cooking excessively fatty meats or products, which promote flare-ups. To Control flare-ups, adjust the controls to lower the temperature. If your grill flare-up is out-of-control, turn off the burners. Don't use water to put out flare-ups. Spraying water on a flare-up can cause grease to explode.

General Grill Operation and Cooking Procedures

Direct Cooking

This method involves placing the food directly over the lighted burners. This is a common way to cook foods that take less than 20 minutes or to sear larger foods at the beginning of the cooking process. Turning too soon and too often is one of the most common grilling mistakes. Never spray water on the grill or into grease. Use a meat thermometer to achieve desired doneness and remove items one degree below how you would like to enjoy them, as the resting period before carving or consuming will raise the temperature.

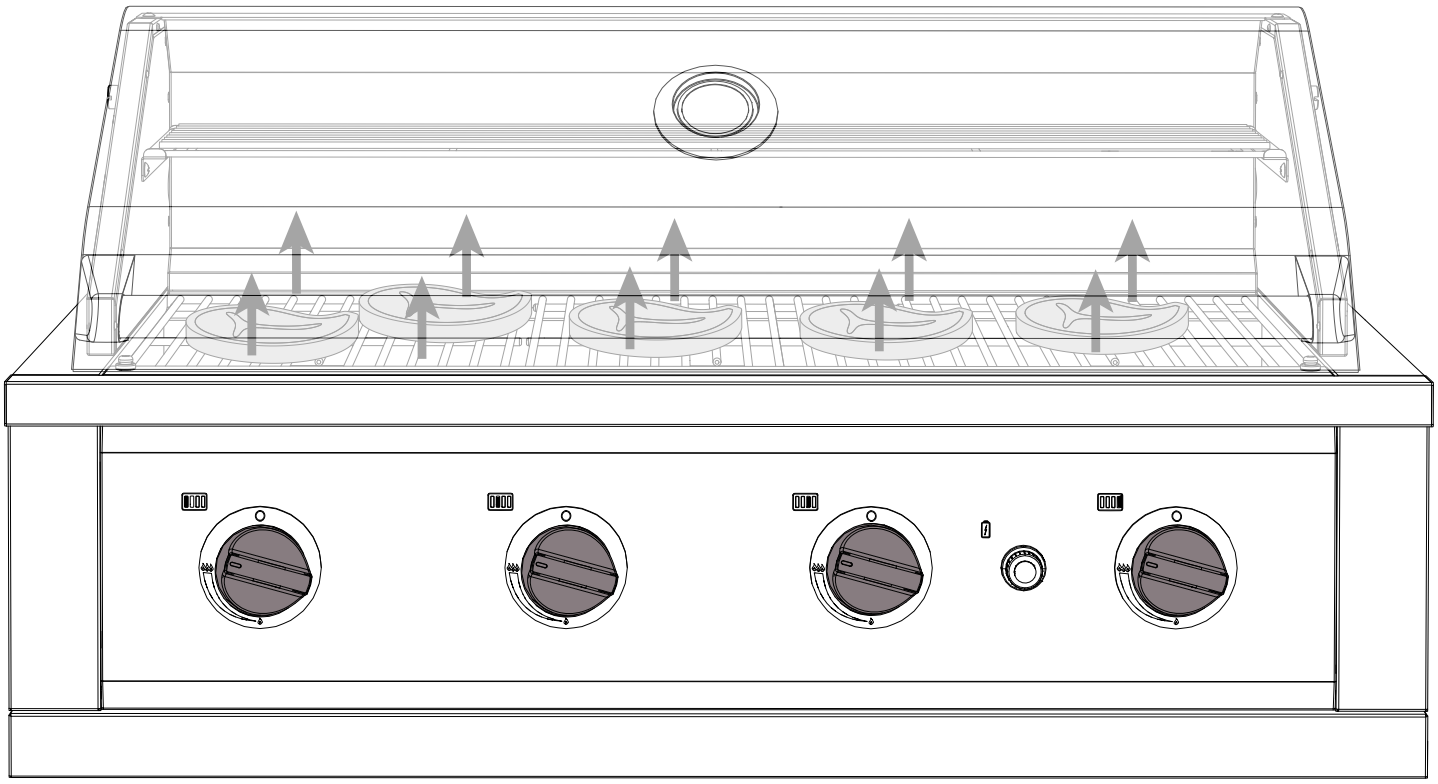

General Grill Operation and Cooking Procedures

Indirect Cooking

You can cook larger foods slowly to perfection on one side of the grill by using indirect heating technique. This can be achieved by leaving the burners directly below the food "OFF" and igniting the burners to the side of the food. The heat from the lighted burner circulates gently throughout the grill, cooking the food without any direct flame touching it. This method greatly reduces flare-ups when cooking extra fatty cuts, because there is no direct flame to ignite the fats and juices that drip down during cooking. Place a drip pan slightly smaller than the cut of meat on the cooking grids or Flame Tamer Panels under the meat being cooked. This will allow you to catch meat juices for making gravy. Flare-Ups: The fats and juices that drip from the meat cause flare-ups. Since flare-ups impart the distinctive taste and color for food cooked over an open flame, they should be expected and encouraged within reason. Nevertheless, uncontrolled flaring can result in a ruined meal. To control excessive flare- ups caused by too high a heat setting, turn the heat control knob to a lower setting.

⚠ CAUTION

- **If burners go out during operation, close gas supply at source, and turn all gas valves off. Open lid and wait five minutes before attempting to re-light (this allows accumulated gas fumes to clear).**
- **Should a grease fire occur, close gas supply at source, turn off all burners and leave lid closed until fire is out.**
- **Do not attempt to disconnect any gas fitting while your barbecue is in operation.**

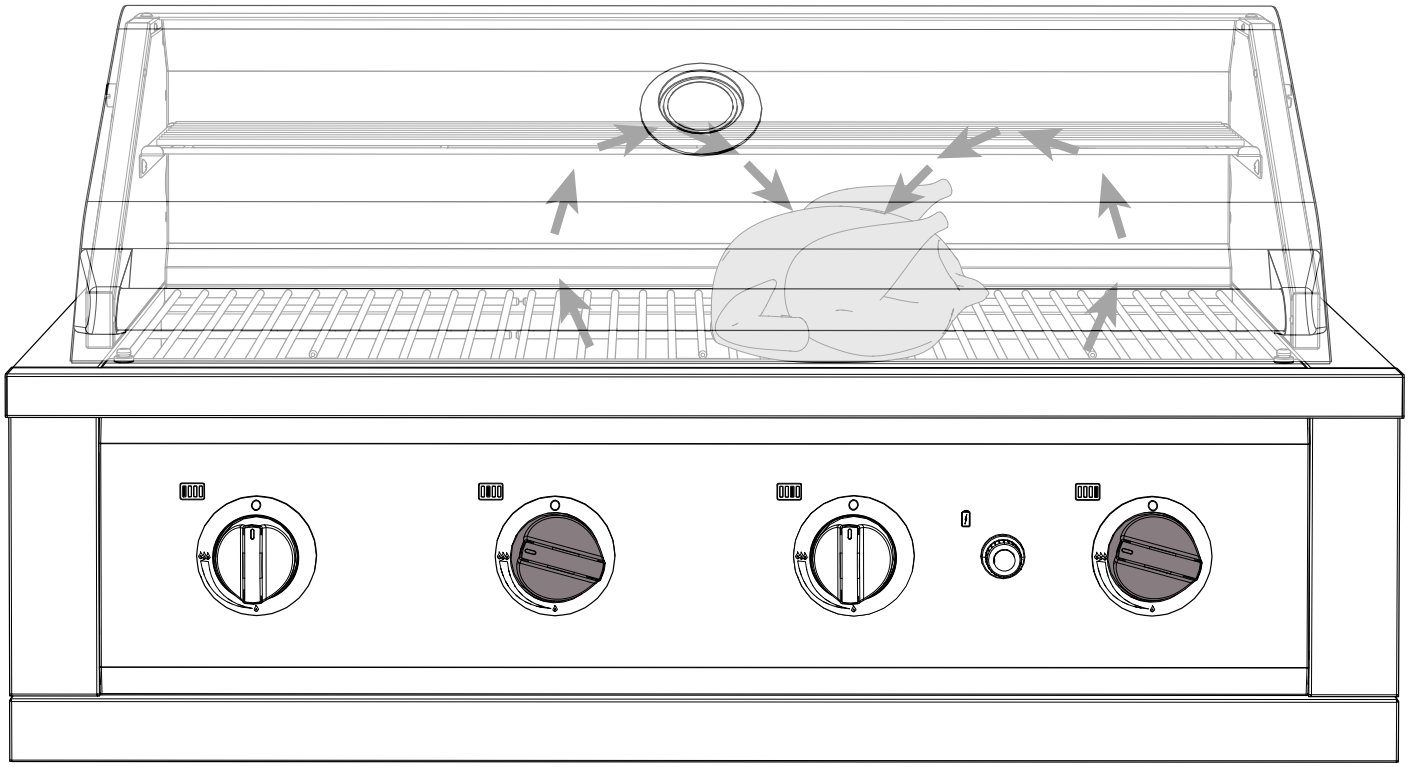

Grill Maintenance and Cleaning

Regular Maintenance

Wash regularly with clean fresh water, mild detergent and a micro fiber cloth. After washing rinse in clean water and wipe the surface dry with your cloth remembering to go with the grain on brushed stainless steel. Generally you should wash your stainless steel every three months. Coastal areas or next to a chlorine pool more frequently every 2 weeks. Do not use abrasive cleaners or a scouring pad of any type as they will cause excessive wear and dull the finish. Stainless steel finishes in coastal environments may show tea staining if not washed regularly. For better protection use a thin coating of protectant on the surface.

List of common conditions that cause corrosion or discoloration of stainless steel and should be avoided:

1. Chloride containing cleansers – this includes bleach and any cleaners containing bleach
2. Muriatic acid (hydrochloric acid) – commonly used to clean up after tile/concrete installation
3. Concentrated soap residue – chemical additives will cause discoloration and some dried soaps actually look like rust
4. Water with high iron content – can leave a rusty residue, especially if allowed to drip continuously
5. Contact with iron materials – including steel wool, iron residue/dust from installation or cleaning of other steel products
6. Don't allow trapped moisture between the product and cover – rubber mats, metal cANSI or cleaning products trapped moisture - allow cabinets to completely dry before covering.
7. Salts – contain chlorides
8. Extreme Heat by Flame
9. Do not permit citrus or tomato juice to remain on stainless steel surfaces.
10. No abrasive cleaners, steel wool pads, or abrasive cloths as they will scratch the finish.

OXIDIZATION Removal

If you have oxidation there are a few steps to take to bring your stainless steel cabinets back to "as new" condition. Apply clean water with a cleaning sponge and rub gently in the direction of the grain. If the mark won't shift, it may be necessary to use a stainless steel cleaner, in which case apply the cleaner and rub gently. After cleaning it is important to rinse the stainless steel with clean fresh water and buff with a soft cloth. Remember to always rub with the grain, NEVER across as you will ruin the finish, and the stainless can lose its shine.

Grill Maintenance and Cleaning

Cleaning the cooking grids:

After cooking, turn control knobs to "OFF" and let grill cool before attempting to clean your cooking grates. Before first use and periodically it is suggested that you wash the cooking grids in a mild soap and warm water solution. You can use a washcloth or a vegetable brush to clean your cooking grates.

Remove the Burners:

1. Remove the Grill Racks and Flame Tamers.
2. Unscrew the fasteners securing the burners to the tray.
3. Lift the burner up.
4. Then pull to the rear of the grill so the burner head comes off the brass orifice at the front.

Cleaning the Burner:

- To maximize grill performance, clean the exterior of the burner with a abrasive scouring pad. Remove stubborn scale with a metal scraper.
- Clear any clogged ports with a straightened paper clip. Never use a wooden toothpick as it may break off and clog the port.
- Shake out any debris through the air shutter.
- Use a flashlight to inspect the burner inlet to ensure it is not blocked. If obstructions can be seen,clean it with a paper clip or a pipe cleaner.

⚠ CAUTION

- **Do not allow excess grease or liquids to accumulate in the drip tray as they may create a fire hazard.**
- **Never use the grill without the drip tray installed.**

Remove the Drip Trays:

The drip tray should be cleaned after each use. After the grill is completely cool, remove the drip tray by pulling it out until it comes free.

Clean it with hot soapy water or an oven-style cleaning product and re-install. When using an oven style cleaning product be sure to carefully follow the manufacturer's instructions. Many of these cleaners are toxic and can damage the stainless steel finish if not used properly. Test on a nonvisible area of stainless steel before using on full area.

Also, check the tray after rain. If you've left the grill uncovered, you may need to remove the drip tray to drain the water from the tray.

Grill Maintenance and Cleaning

Flame Tamer Panels:

The Flame Tamer Panels normally burn off any accumulated food drippings. But you may occasionally experience larger spills that don't burn off under normal use.

When this happens:

1. Let the grill cool completely. Remove the racks and then the Flame Tamer Panels by lifting the front edge and lifting them upward.
2. Flip the trays over and put them back in place over the burner.
3. Light the burners and set them to "MAX" for 5 - 10 minutes to burn the Flame Tamer Panels clean. Be sure the Panels have completely cooled before reinstalling them. Any remaining food items can be brushed off using a soft brush.

Stainless Steel:

1. After each use wipe down the exterior of the grill to remove grease, black soot and splatters.
2. Be sure to follow the cleaning instructions for keeping the grates and burners clean and ready for use.
3. Use a commercially available Stainless Steel cleaner to clean and polish the exterior surfaces.

Part of the appeal of the NewAge Grill is the fine grain finish. Always clean with the grain direction.

When removing stubborn stains:

- Do not use metallic abrasives and always rub in the direction of the grain.
- Some household cleaning products are not suitable for stainless steel; be sure to read the label before using on your NewAge Grill.
- Always use the mildest cleaning solution first, scrubbing in the direction of the grain. Specks of grease may gather in the grain of the stainless steel and bake on to the surface, giving the appearance of rust.

To remove these baked-on foods use a fine to medium grit non-metallic abrasive pad (Scotch Brite is good) in conjunction with a stainless steel cleaner. Always be sure to clean and polish with the direction of the grain.

Grill Maintenance and Cleaning

SPECIAL NOTE FOR LOCATIONS NEAR POOLS AND COASTAL AREAS:

The 304 stainless steel material used in the construction of a NewAge Grill is highly rust resistant, however, chlorine in the air from swimming pools or the salt from sea air may cause surface rust to appear and even create some pitting if left on the product.

Here are a few tips to avoid this:
Regularly wipe down the exterior surfaces with a damp cloth. Micro fiber cloths perform very well. Allow the surfaces to dry before installing the cover. Do not cover a damp grill.
In extreme environments apply a rust inhibitor which leaves a microscopic protective layer on the grill. Products that provide a layer of vapor corrosion inhibitors (VpCI™) protect the surface very well.
For seasonal storage use the product referred to above, ensure the grill is dry and then cover and secure the cover to minimize the amount of damp air getting to the surfaces.

THE NewAge WARRANTY DOES NOT COVER OCCASIONAL SURFACE RUST OR STAINING DUE TO ENVIRONMENTAL CONDITIONS.

ACCESSING AND INSPECTING THE CONDITION OF THE SUPPLY HOSE

STEP 1 OPEN DOOR
STEP 2 INSPECT THE CONDITION OF THE HOSE

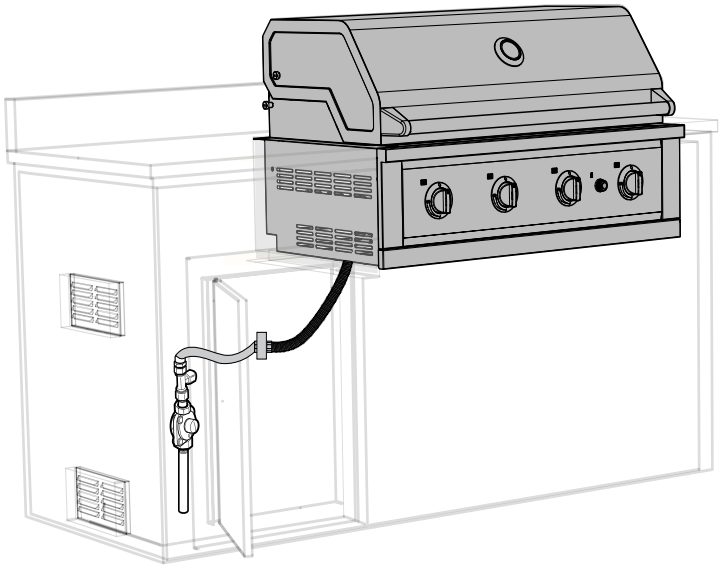

HOSE SHOULD HAVE A SMOOTH SNAKED PATH TO PREVENT KINKS AND PREMATURE FAILURE. PLEASE EXAMINE HOSE AND FITTINGS FOR CRACKS, TEARS, OR WEAR MARKS FROM RUBBING ETC.

Troubleshooting

Please check and confirm the following points before calling Customer Service.

1. Is the fuel supplied to the grill?
2. Is the main shut-off valve open?
3. Are you using the correct type of fuel for the grill? (Propane gas or Natural Gas)
4. Attempt to match-light the burner (see **page 36**). Check to see that other burners on the unit operate. Clean electrode tip of any debris.

PROBLEM	POSSIBLE CAUSES
1. Low heat/ Low flame when control knob turned to "High"	**For natural gas - undersized supply line.** Supply pipe diameter must be sized according to installation code.
2. Uneven heat	**Flame Tamer Panels installed incorrectly.** Ensure Flame Tamer Panels are installed on the pins provided on the firebox. See assembly instructions. Pre-heat grill with main burners on high for 10 minutes. **Excessive grease and ash build on Flame Tamer Panels and in drip pan.** Clean Flame Tamer Panels and drip pan regularly. Do not line drip pan with aluminum foil. Refer to cleaning instructions.
3. Burners burn with yellow flame, accompanied by the smell of gas.	**Possible spider web or other debris, or improper air shutter adjustment.** Thoroughly clean burner by removing. See general maintenance instructions. Open air shutter slightly according to combustion air adjustment instructions. (This must be done by a licensed gas fitter.)

Troubleshooting

PROBLEM	POSSIBLE CAUSES
4. Main burner will not light with the Pulse Ignitor, but will light with a match	**Electrode is covered by cooking residue** Clean wire or electrode using a cloth and rubbing alcohol. **Electrode and burners are wet** Wipe with dry cloth. **Ignition electrode cracked or broken; sparking where cracked** Replace the valve. This must be done by a licensed gas fitter. **Flame thrower orifice is blocked** Clean the orifice or replace the valve as required. **Faulty Pulse Ignitor.** Replace the valve. This must be done by a licensed gas fitter. **Ignition electrode not in correct position.** The distance from the tip of the electrode to the burner should be 4 mm.
5. Humming regulator.	This is not a defect. It is caused by internal vibrations in the regulator and does not affect the performance or safety of the gas grill. Humming regulators will not be replaced.
6. Burners will not cross light each other.	**Grease, Food material, or Dirt build up.** Clean the fire-bridge channels. Make sure the burner's side ports are clean.
7. Burner output on "high" setting is too low. (Rumbling noise and fluttering blue flame at burner surface.)	**Supply hose is pinched.** Reposition supply hose as necessary. **Dirty or clogged orifice. Spider webs or other matter in venturi tube.** Clean burner orifice . Clean out venturi tube.
8. Infrared burner (if equipped) flashes back (during operation the burner abruptly makes a loud "whoosh" sound, followed by a continuous blow-torch type sound and grows dim.)	**Ceramic tiles overloaded with grease drippings and build-up. Ports are clogged.** Turn burner off and allow to cool for at least two minutes. Relight burner and burn on high for at least five minutes or until the ceramic tiles are evenly glowing red. **Burner overheated due to inadequate ventilation (too much grill surface covered by griddle or cooking pan.)** Ensure that no more than 75% of the grill surface is covered by objects or accessories. Turn burner off and allow to cool for at least two minutes, then relight. **Cracked ceramic tile.** Allow burner to cool and inspect very closely for cracks. If any cracks are found, contact NewAge customer service for replacement option. **Leaking gasket surrounding the ceramic tile, or a weld failure in the burner housing.**

Troubleshooting

PROBLEM	POSSIBLE CAUSES
9. Electric Ignition (Pulse Ignitor) not working properly	**Gas supply is off** Check gas supply. Turn OFF and ON your gas supply and try lighting again. **Ignition electrode not in correct position.** The distance from the tip of the electrode to the burner should be 4 mm. **Faulty Pulse Ignitor** If a spark occurs anywhere but the ignitor tip, replace the Pulse Ignitor. Check to see if the grill will match-light. See "Manually Lighting the Main Grill" section. **Spark is not produced** Check if Pulse Ignitor button is producing Snapping sound when pushed. Remove the Cooking Grate and Flame Tamer Panel to check for spark on the electrode as expected when Ignitor button is pushed. **Battery health** Make sure that AA battery is not oxidized and contains enough charge. Check your ignitor battery and replace if needed. Check to see if debris is blocking the electrodes. Is one of your burners turned on? Allow up to four seconds of gas flow to ignite.
10. Burner goes out when set to low	**Supply hose is pinched.** Reposition supply hose as necessary. **Dirty or clogged orifice. Spider webs or other matter in venturi tube.** Clean burner orifice. Clean out venturi tube.

Exploded View and Spare Parts

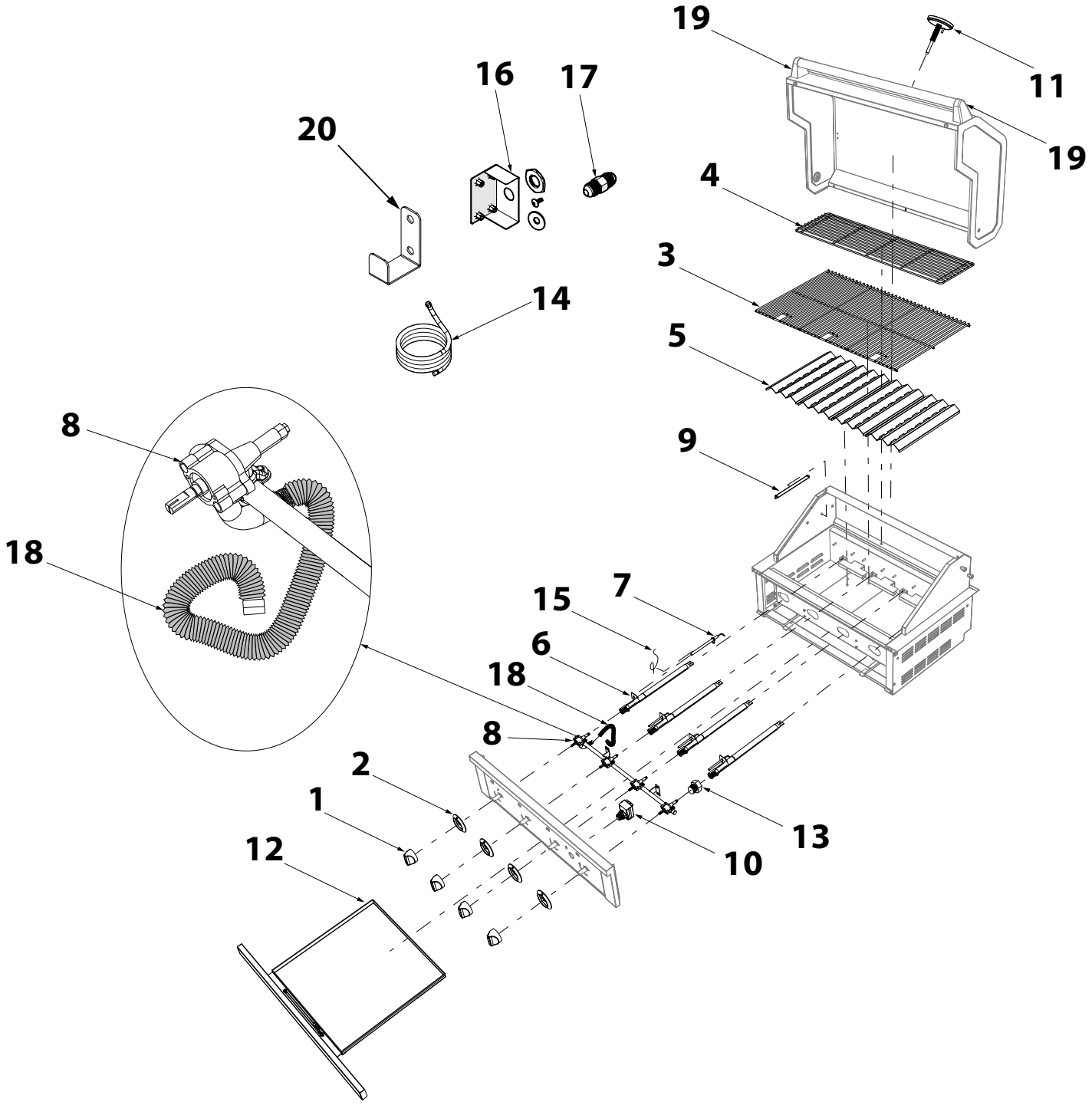

Exploded View and Spare Parts

Item No.	Eng. Part No.	Description	QTY	SKU No. for spares offered	Spare Part QTY
1.	GLE-01.002.02.04A-01	Nickel Plated Zinc Burner Control Knob	4	65956	1
2.	GLE-01.002.05A-01	Knob Bezel	4	64939	1
3.	GLE-02.001.05A-01	Cooking grate	3	64941	1
4.	GLE-02.001.010A-01	Warming Rack	1	64944	1
5.	GLE-02.001.04A-01	Flame Tamer	4	64947	1
6.	GLE-01.001.06A-01 (Item 01, 02 , 03 , 04)	Main Burner Assembly	4	64948	1
		Item 01 - Main Burner	4		
		Item 02 - Air Shutter Mesh	4		
		Item 03 - Air Shutter	4		
		Item 04 - Electrode Bracket	4		
7.	GLE-01.001.06A-01 - (Item 05)	Tube Burner Electrode	4	64958	1
8.	GLE-01.001.05.03A-01	Tube Burner Valve	4	64950	1
9.	GLE-01.001.18A-01	Warming rack bracket	2	64957	1
10.	GLE-01.002.04A-01	Pulse Ignitor Module	1	64961	1
11.	GLE-01.004.07A-01	Thermometer	1	66931	1
12.	GLE-02.003A-01	Grease Tray assembly	1	64964	1
13.	GLE-01.008A-02	Natural Gas Orifice	4	66828	1
14.	GLE-01.007A-01	Natural Gas Hose	1	64971	1
15.	GLE-01.001.06A-01 - (Item 06)	Tube Burner Electrode Wire	4	66948	1
16.	GL2-23A-01	Mounting Bracket and Hardware Kit	1	65918	1
17.	GL2-22A-01	Male Adaptor	1	65917	1
18.	GL2-16A-01	Metal Corrugated Hose	1	65949	1
19.	GL2-01.023.02A-01	1x Pair Handle Base LH & RH with 4x M6 screws	1 Set	67751	1
20.	GL2-24A-01	L-Bracket	2	65919	1

NewAge Customer Service

Please gather and have the following information available when contacting NewAge customer service:

- Model number
- Date of purchase
- Proof of purchase by the original owner
- Production code

The production code can be located on the back of the grill.

For fastest service, contact NewAge Products at 1-877-306-8930; or support@newageproducts.com.