furnishing better lives together ®

WWW.JOFRAN.COM

ASSEMBLY INSTRUCTIONS & PARTS IDENTIFICATION
MODEL # 2601-84
SLATER WORKS
RECTANGLAR DINING TABLE

Thank you for purchasing this quality product. Be sure to check all packing material carefully for small parts that may have come loose inside the carton during shipment.

KEY COMPONENTS			
No.	Code	Q'ty	Description
1	NOT AVAILABLE AS A PART	4 Pcs	Table leg
2	NOT AVAILABLE AS A PART	1 Pc	Table top
3	NOT AVAILABLE AS A PART	2 Pcs	Extension Mechanism
4	2601P13L	4 Pcs	Extension lock
5	2601-84P01A	4 Pcs	Apron Spacer
6	2601P01F	4 Pcs	Floor glide

HARDWARE KIT 2601-84P01				
No.	Description			Q'ty
A		Hex nut	Ø8	8 Pcs
B		Lock washer	M8	8 Pcs
C		Flat washer	M8x18	8 Pcs
D		Key wrench	12	1 Pc

STEP 1:

- Carefully lay Table Top upside down on a smooth flat surface to prevent scratches.
- Attach each Leg to each corner of the Table Top as shown in illustration. Insert a Flat Washer, Lock Washer and Bolt on to the insert nut of each Leg (See Detail A)
- Once all Legs are in place, fully tighten nuts by turning clockwise using provided Key Wrench until secure.

DETALLE A

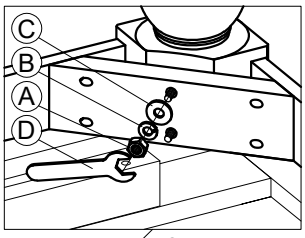

x8

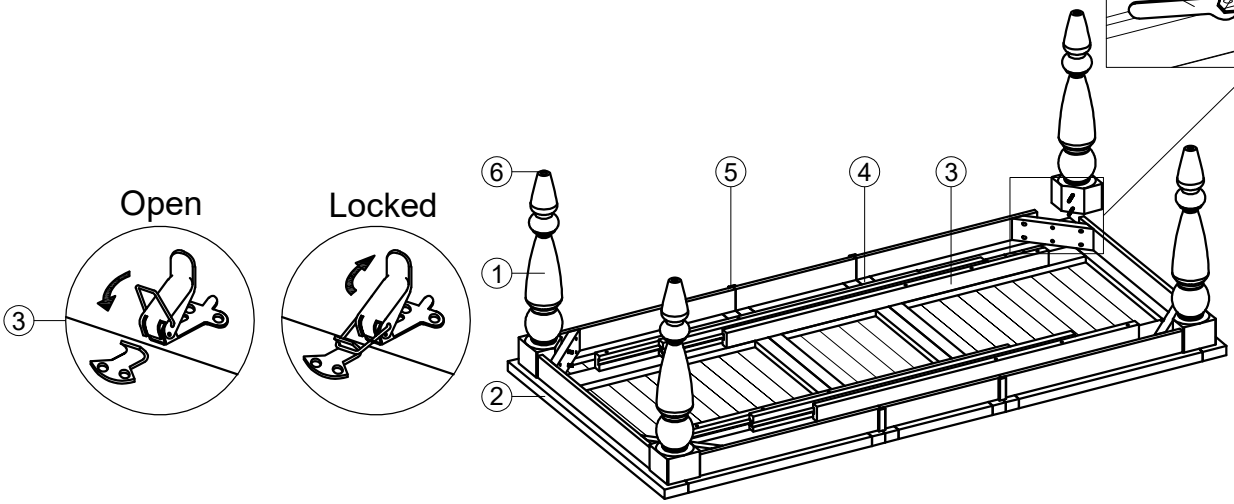

STEP 1:

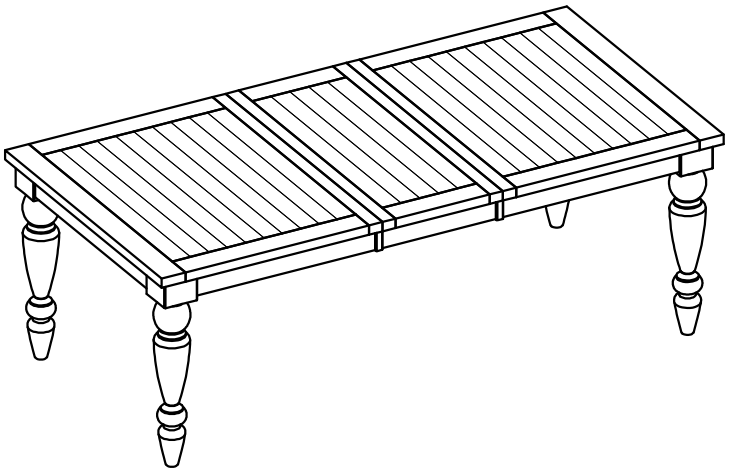

MADE IN VIETNAM