Instruction Manual

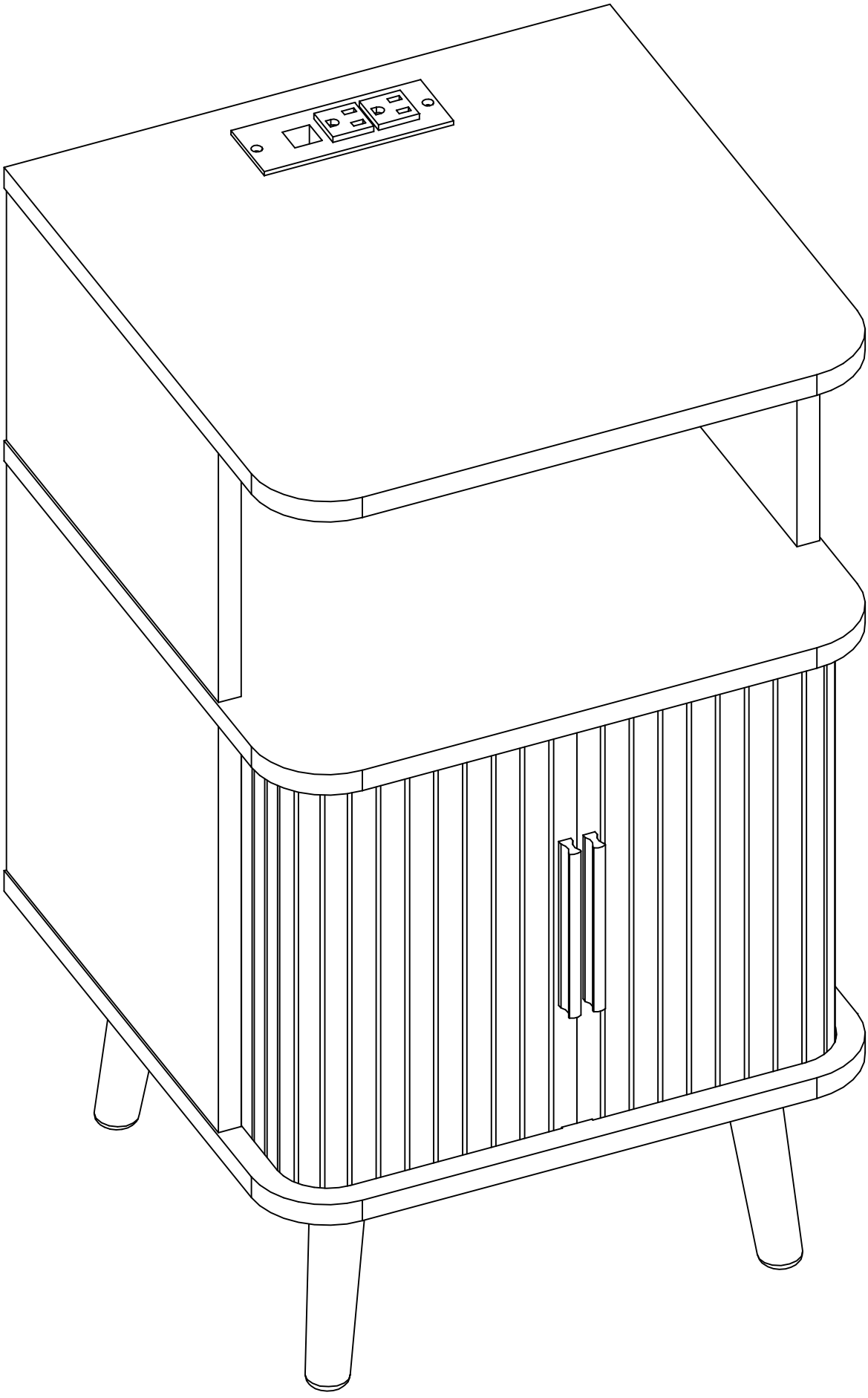

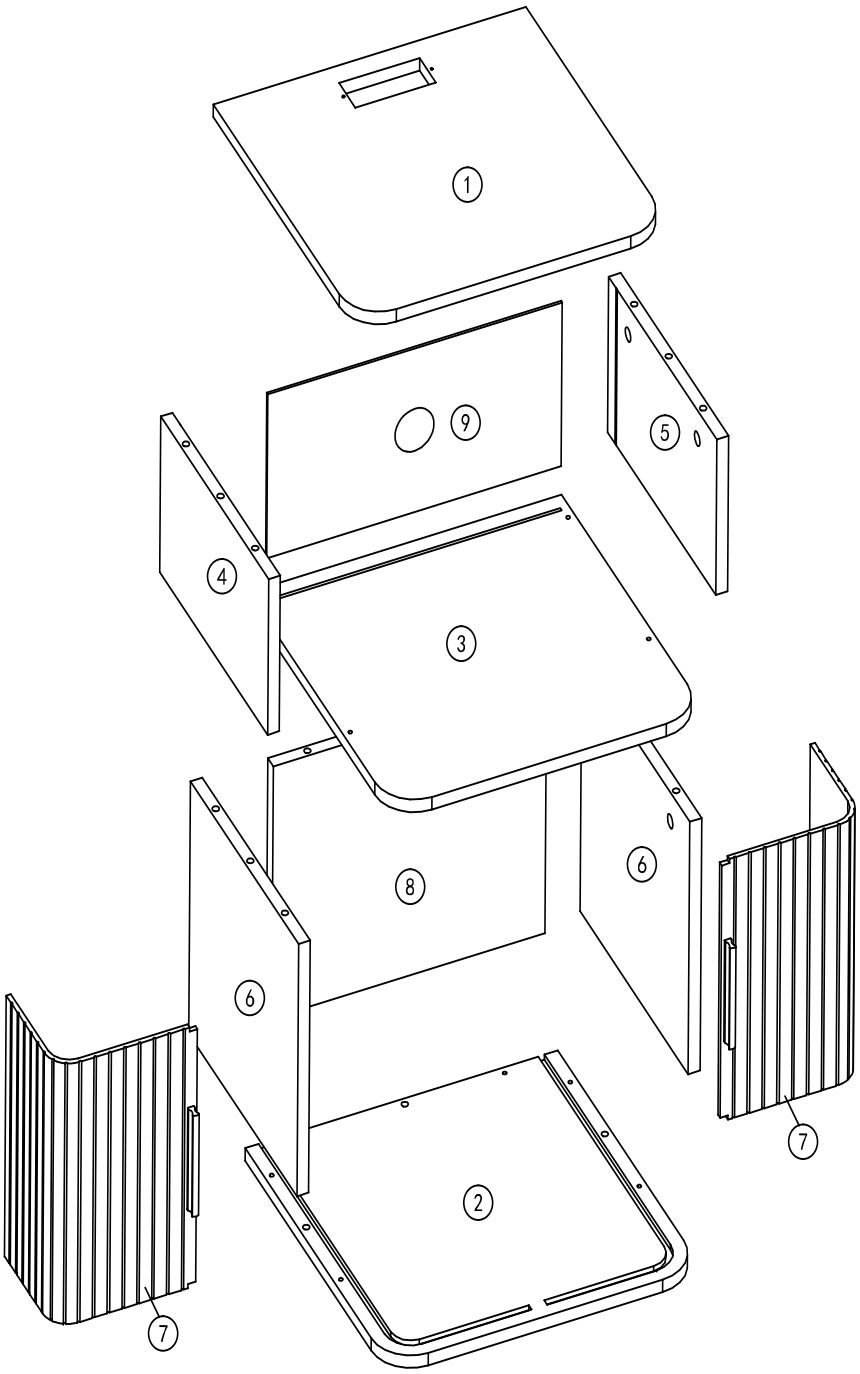

A 10PCS 	B 10PCS Φ15*11 
C 8PCS Φ8*40 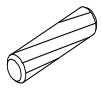	D 10PCS M5*40 
E 2PCS 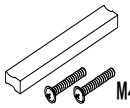 M4*8	F 22PCS M3.5*14 
G 4PCS  H=150mm	H 4PCS 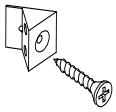
	J 1PCS 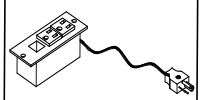

1

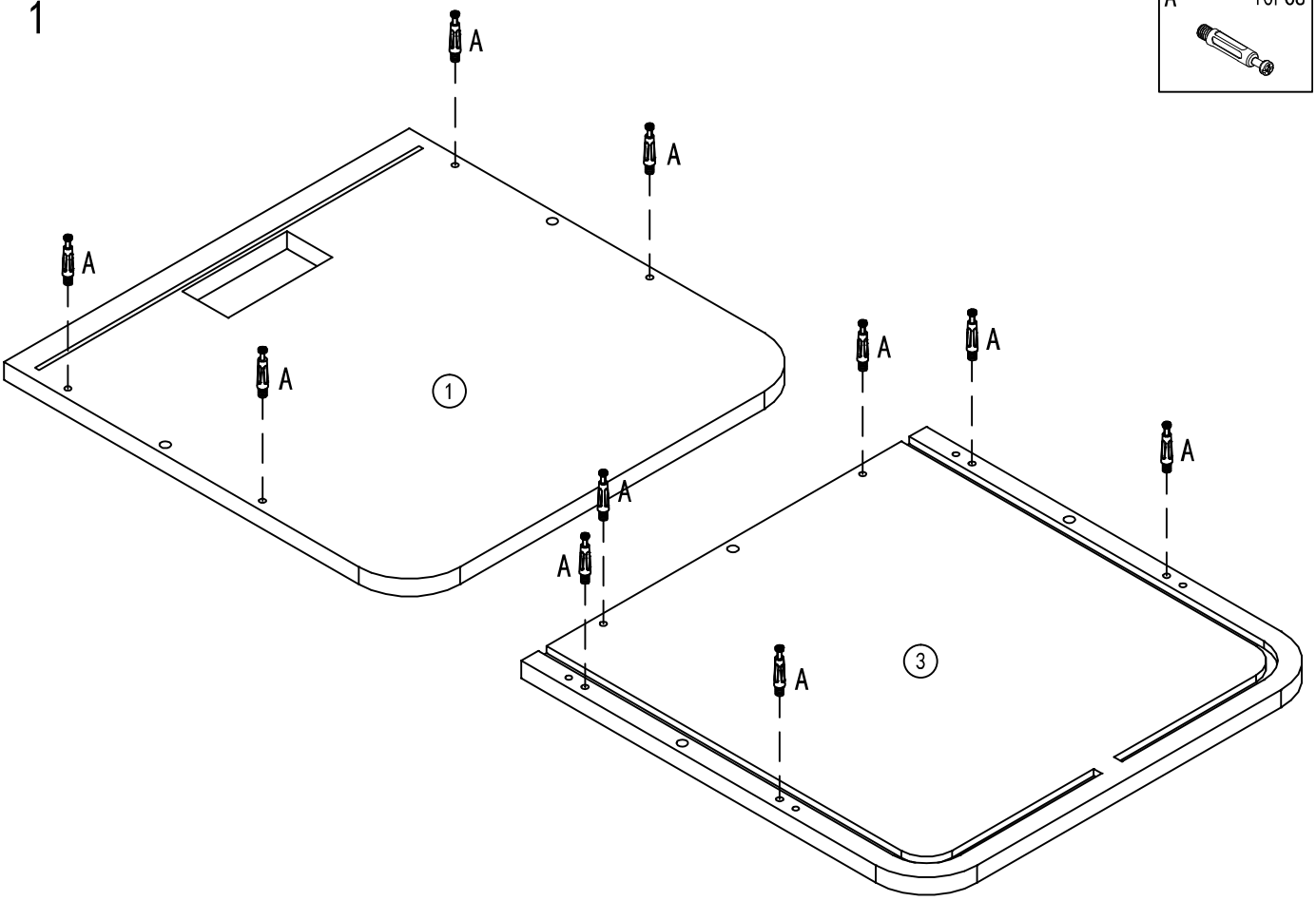

2

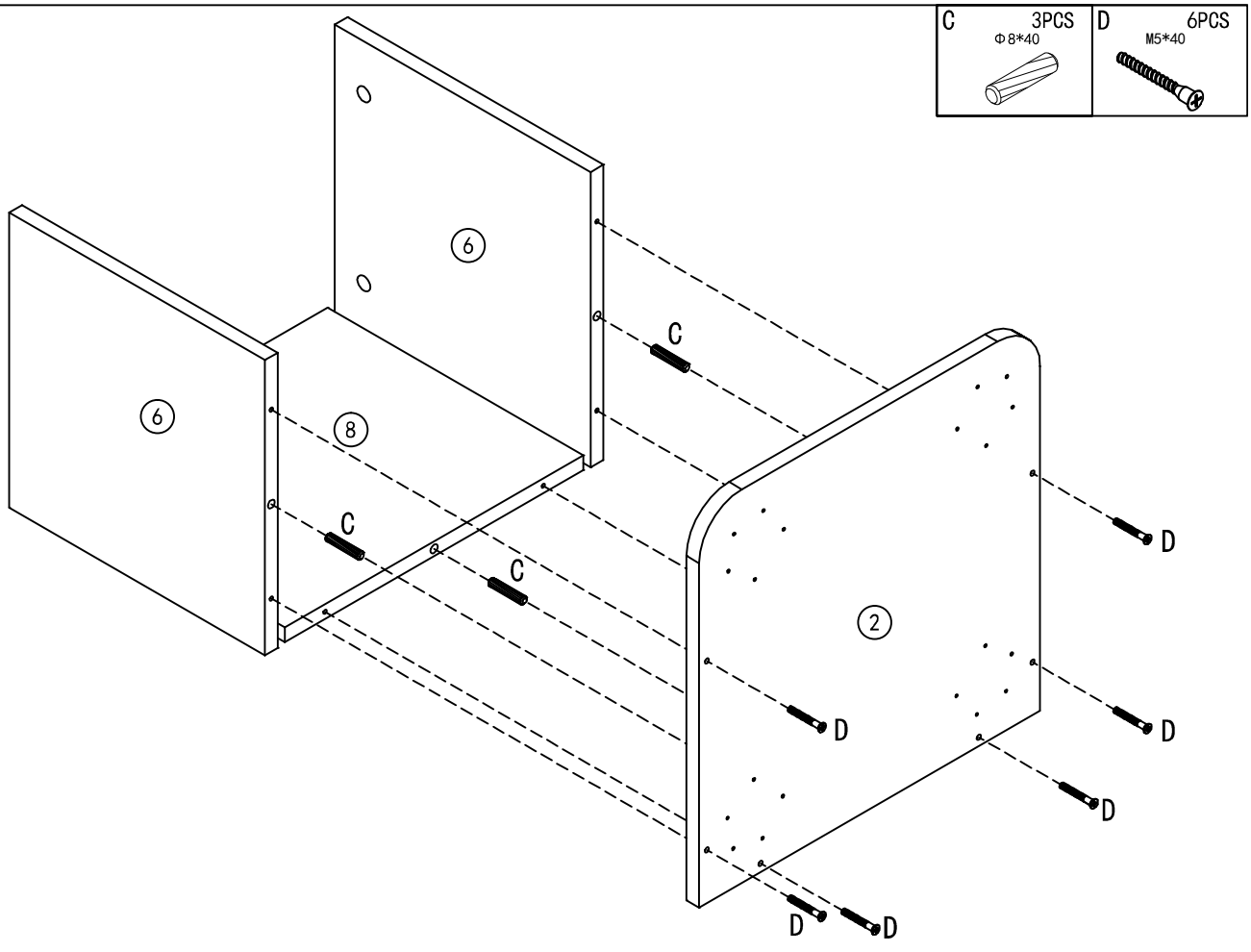

3

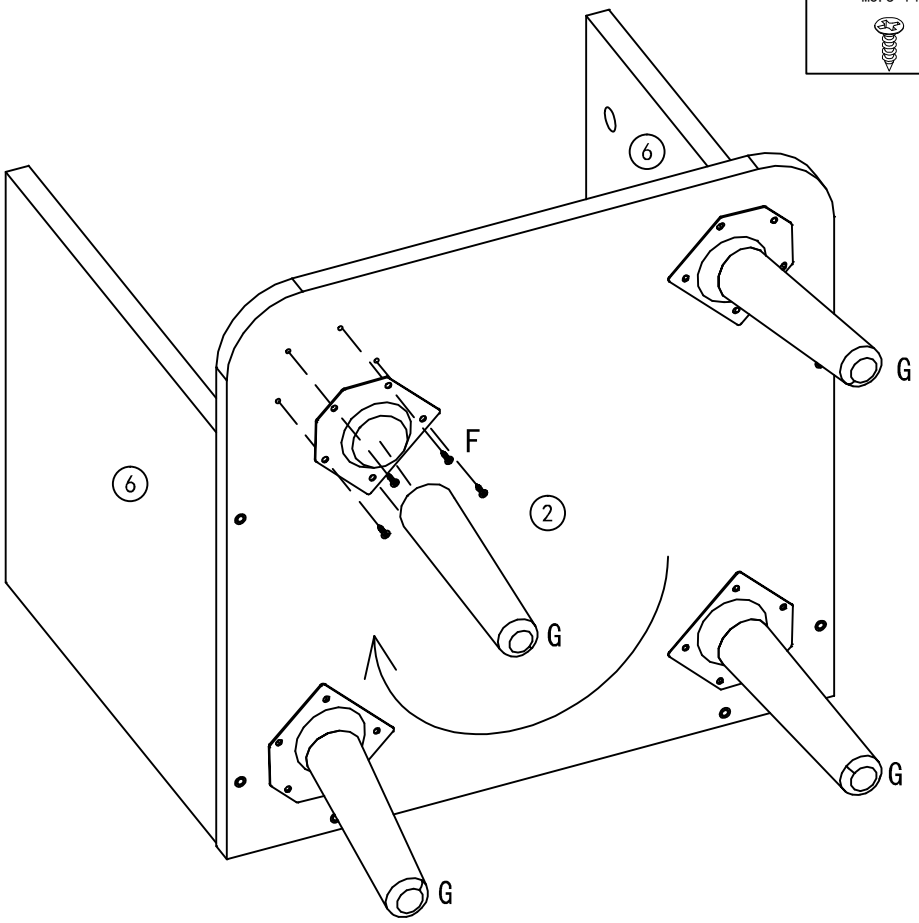

4

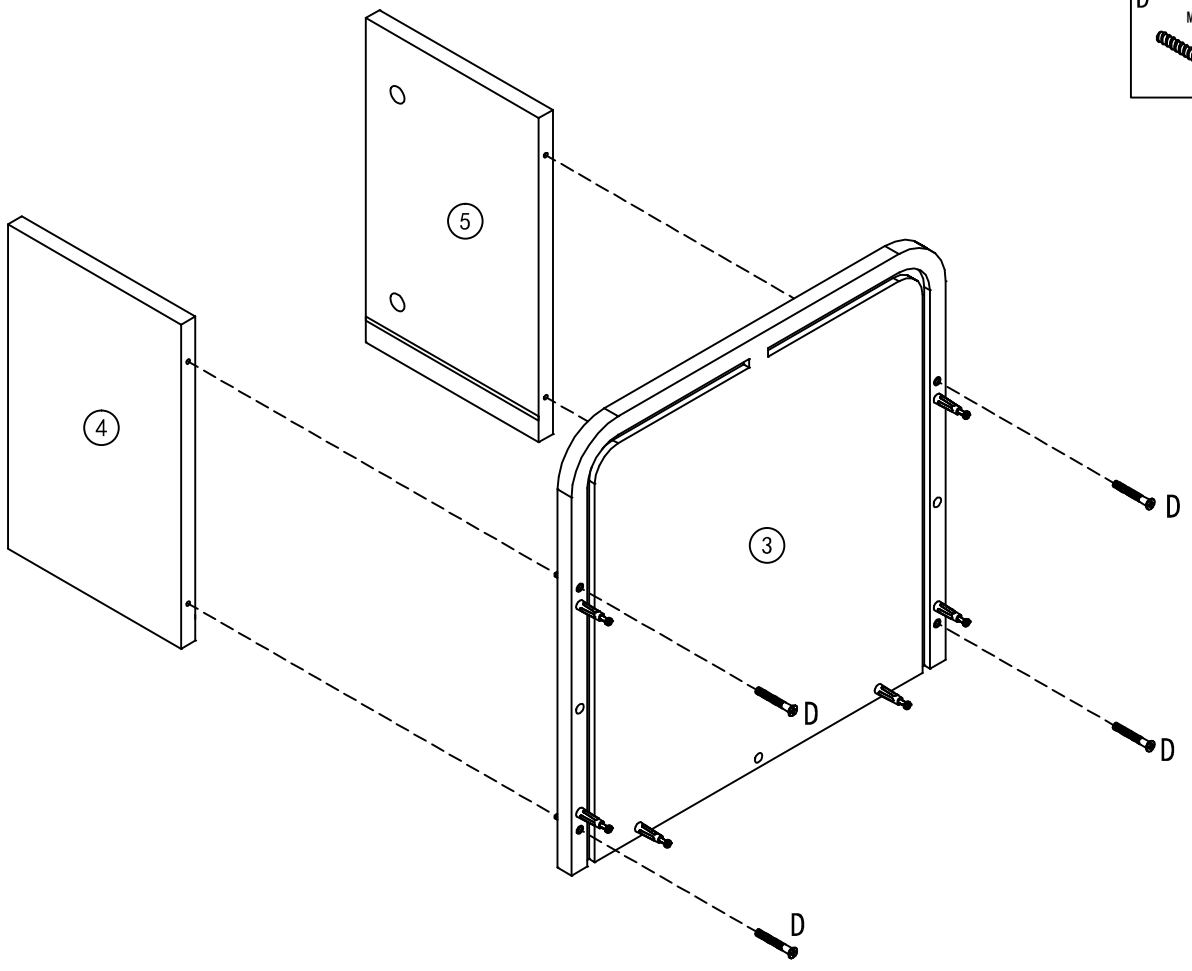

5

B	6PCS
	Φ15*11

C	3PCS
	Φ8*40

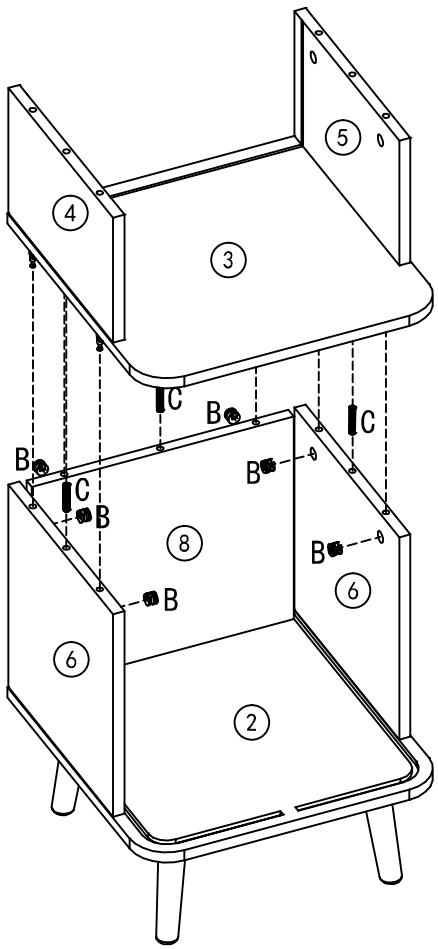

6

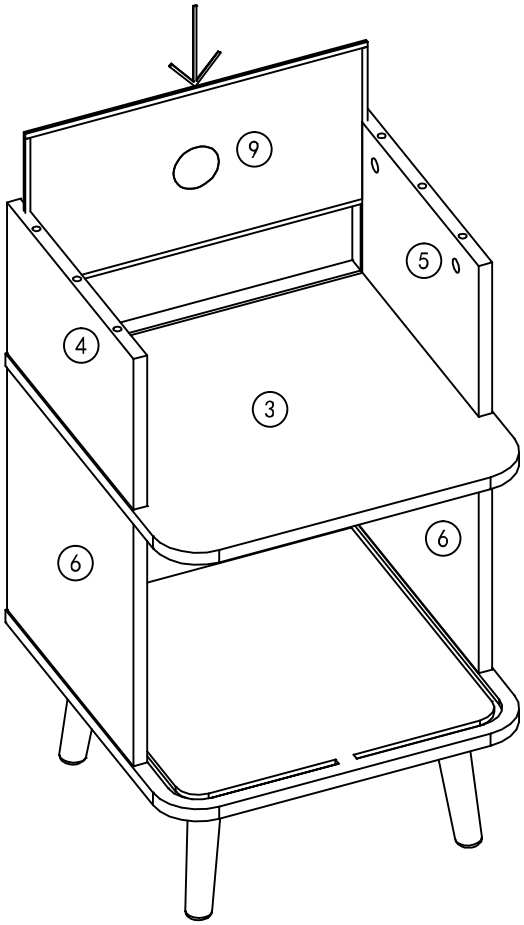

7

B	C
4PCS Φ15*11	2PCS Φ8*40

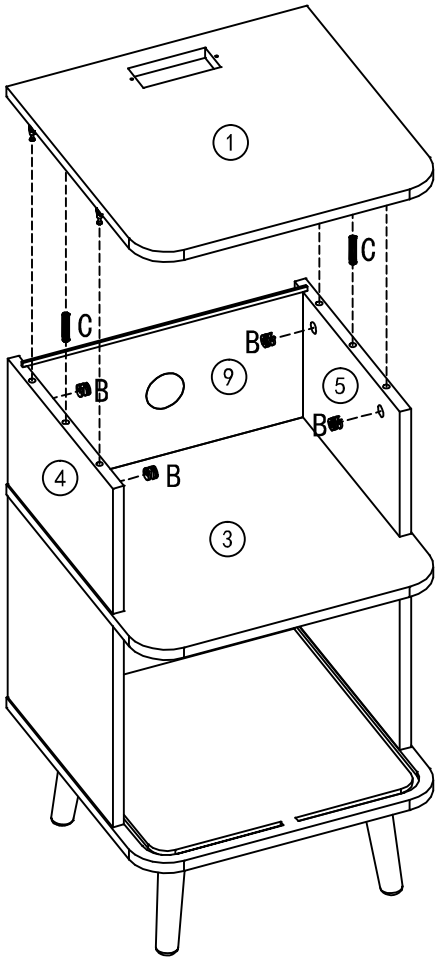

8

F	H	J
2PCS M3.5*14	4PCS	1PCS

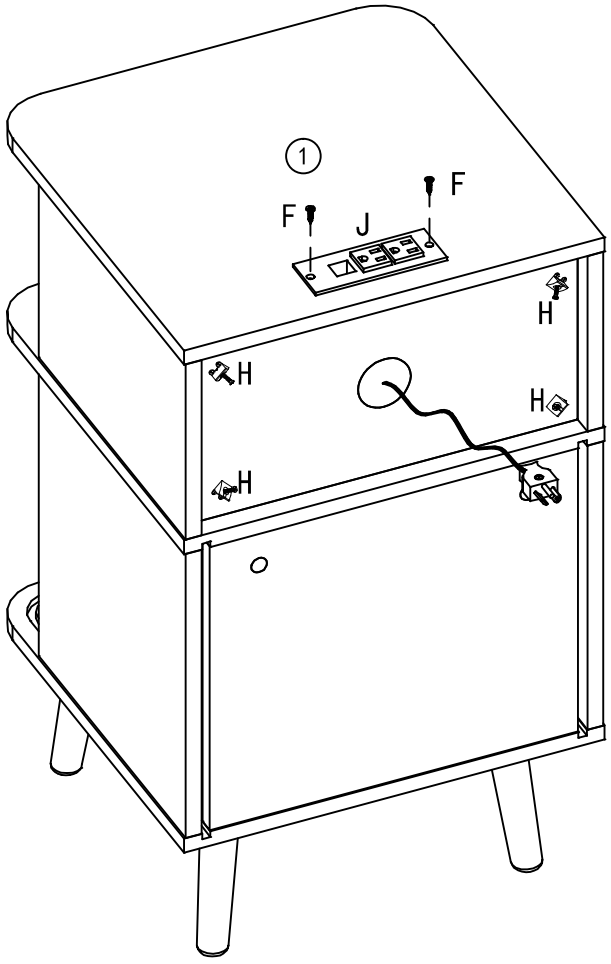

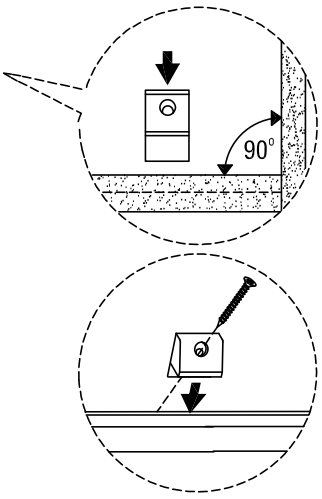

9

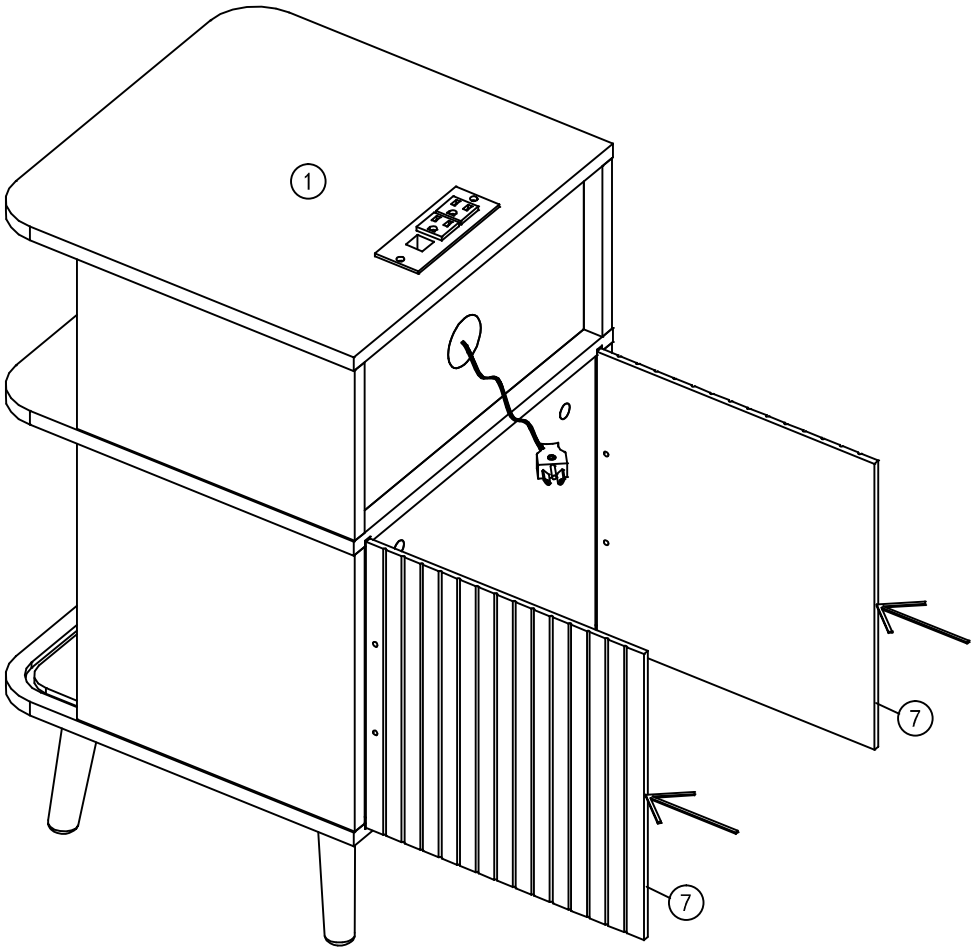

10

