Assembly Instructions

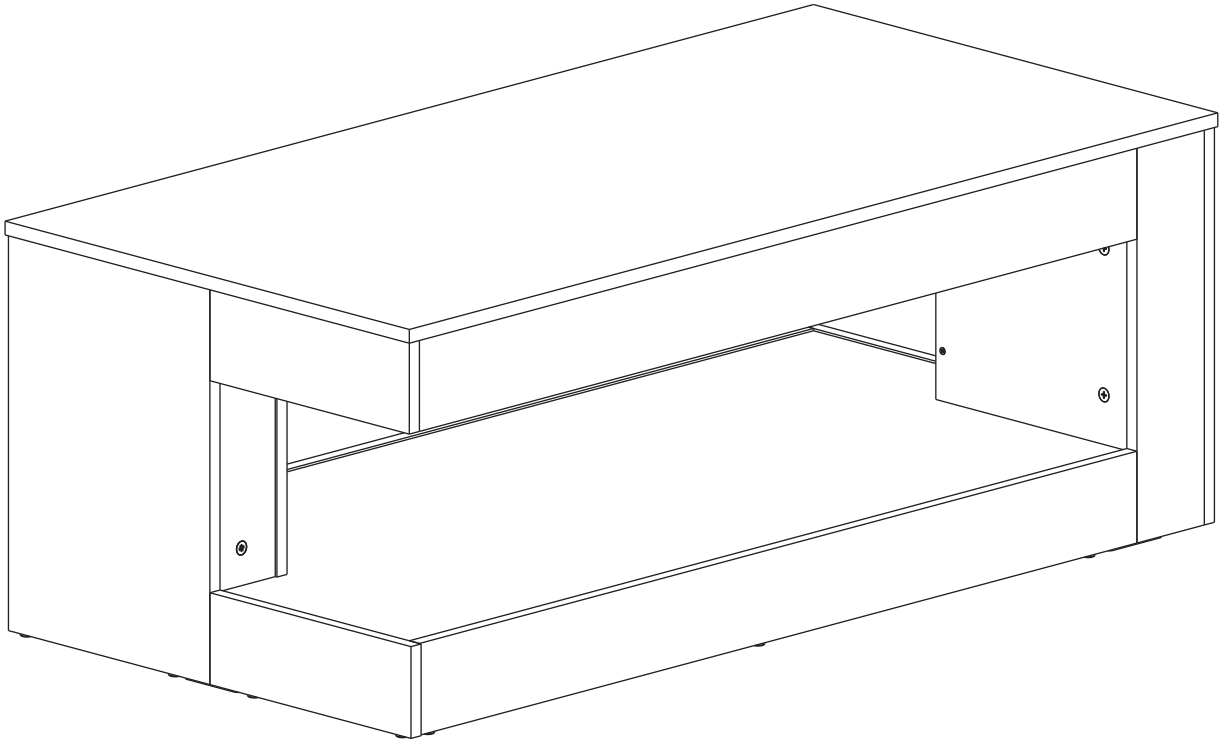

Coffee Table

Model No.

HOGA- SL0031

Contact Us

We're here to help you.



Your satisfaction is our top priority. If you encounter any issues with this product, such as missing or damaged parts, we're here to help. Please retain the original packaging and take photos of the packaging and the product, then contact us as soon as possible.

Warm Tips

1. Carefully read these instructions and keep them for future reference.
2. Check the parts list and confirm everything's there before starting assembly.
3. When assembling, put all parts on a soft, smooth surface like a carpet to avoid scratches.
4. Don't fully tighten screws until all parts are confirmed in place to avoid misalignment.

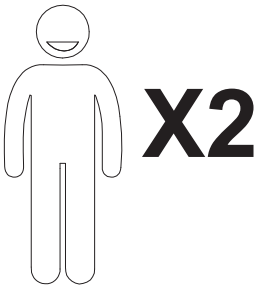

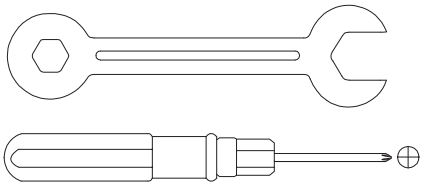

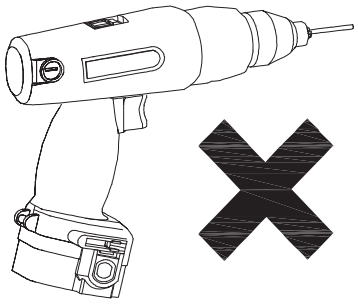

We recommend using hand tools for assembly.

If an electric screwdriver is used, reduce power and torque to avoid damage to the product.

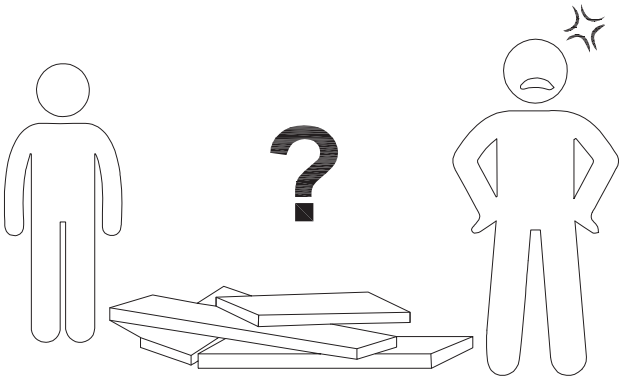

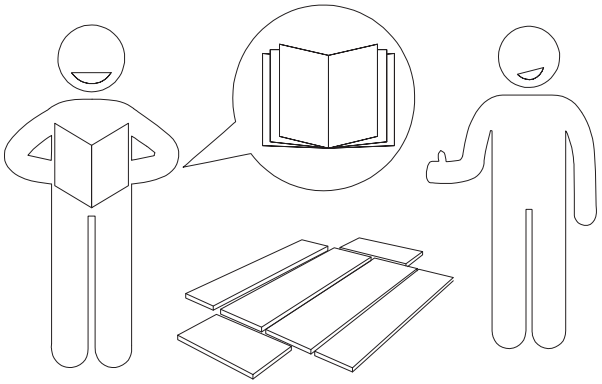

AVOID SCRATCHES

In order to avoid scratching, this furniture should be assembled on a soft surface, such as a rug.

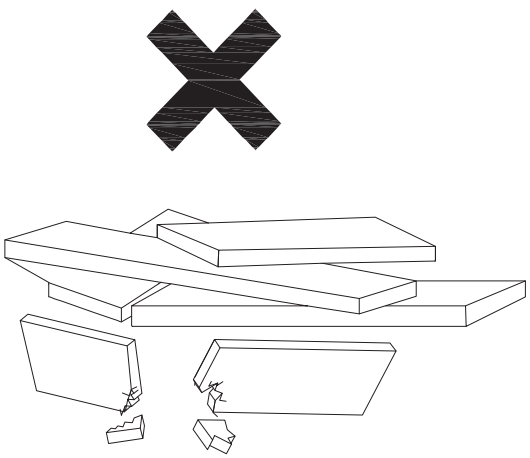

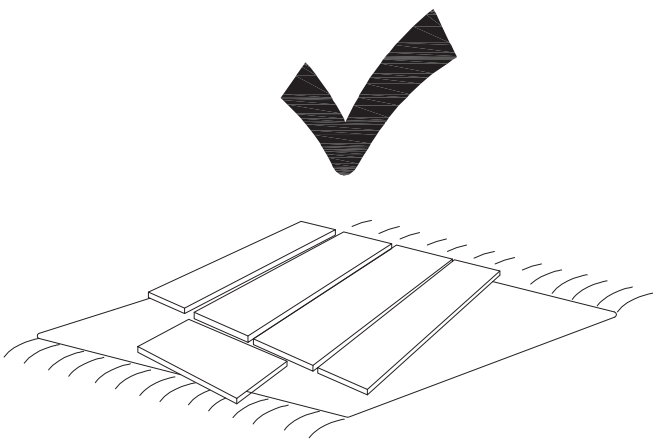

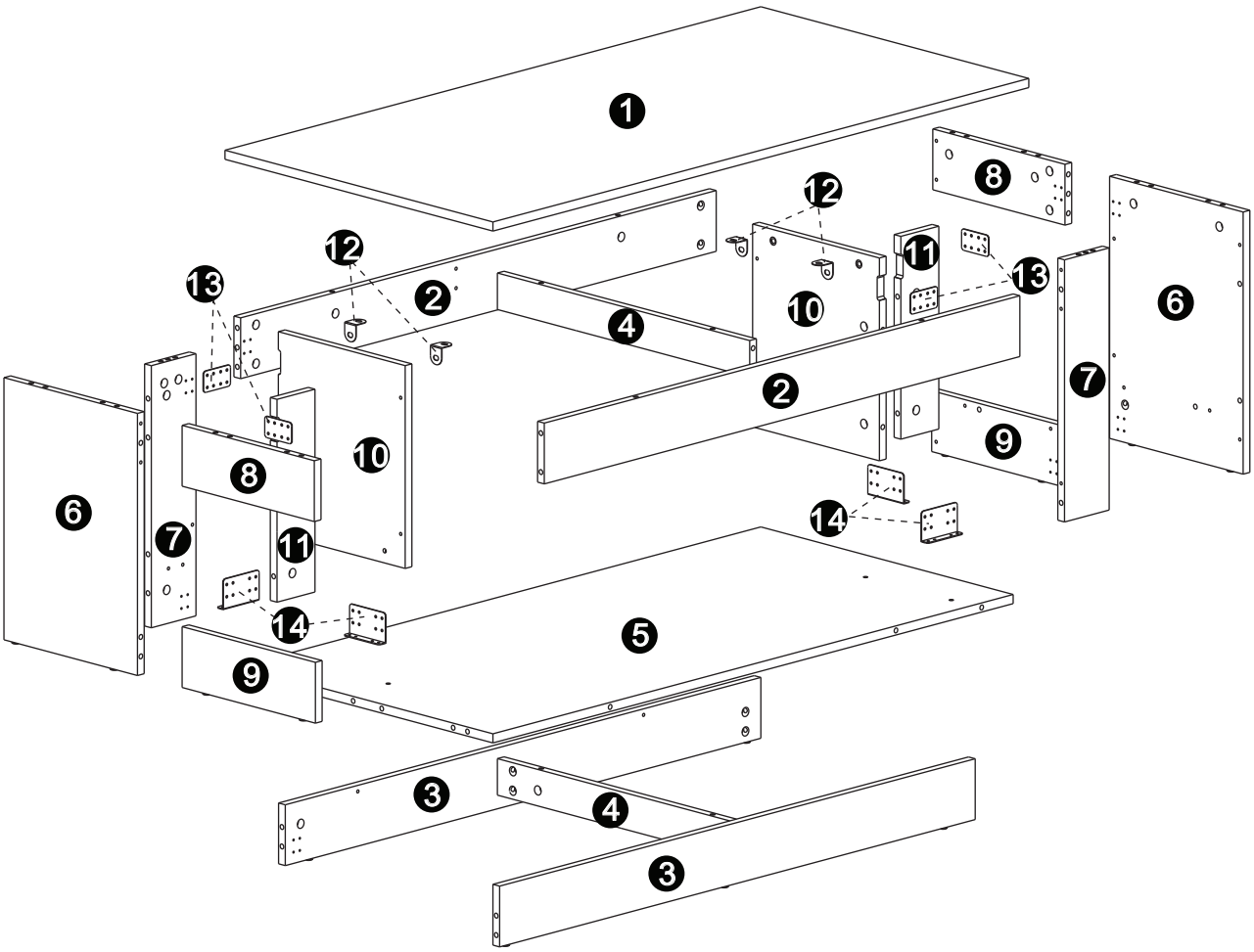

⚠ Caution

Make sure all parts are included. Most board parts are labeled or stamped on the raw edge.
Contact us for a free replacement if you encounter any damaged or missing parts.

Parts List

❶ 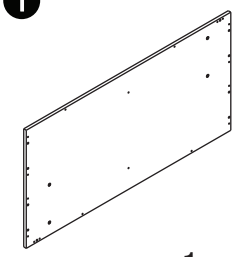 1 pc	❷ 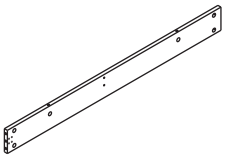 2 pcs	❸ 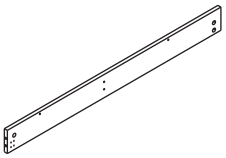 2 pcs	❹ 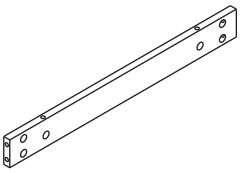 2 pcs	❺ 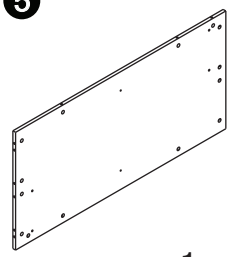 1 pc
❻ 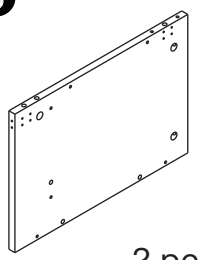 2 pcs	❼ 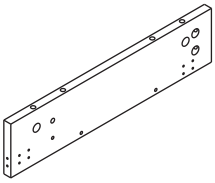 2 pcs	❽ 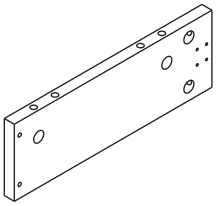 2 pcs	❾ 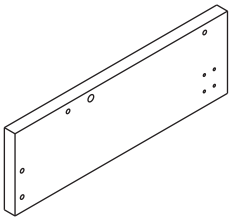 2 pcs	❿ 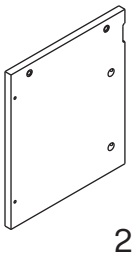 2 pcs
⓫ 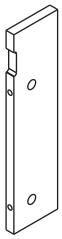 2 pcs	⓬  4 pcs	⓭ 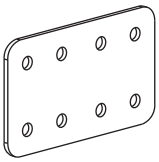 4 pcs	⓮ 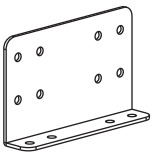 4 pcs	

Hardware List

A	B	C	D	E	F
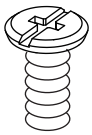 M6x12mm	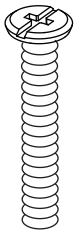 M6x40mm	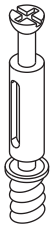 M6x44.5mm	 Ø15mm	 Ø8x30mm	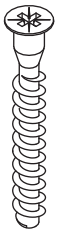 Ø5x38mm
8 pcs	4 pcs	74 pcs	74 pcs	26 pcs	4 pcs

G	H	I			
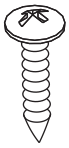 Ø4x13.5mm	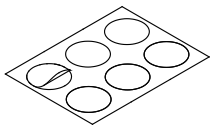 Ø21mm				
80 pcs	6 pcs	1 pc			

Installation of Cams and Pins

Read each step carefully before starting. Each step of instruction should be performed in the correct order. If these steps are not followed in sequence, assembly difficulties may occur.

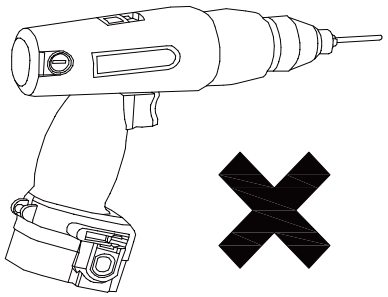

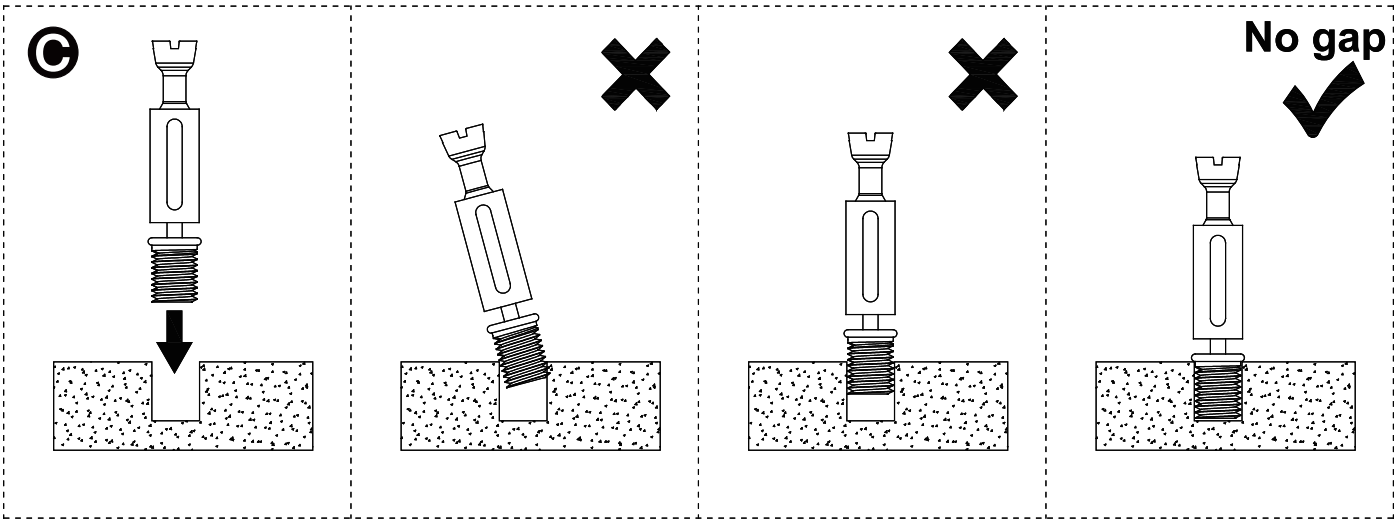

Screw the pin into the hole. Set the cams correctly by aligning the head of the cams with the lock pins.Lock the cam by turning the cam head with a screwdriver until it is tightened. Please do not use an electric screwdriver to assemble the unit.

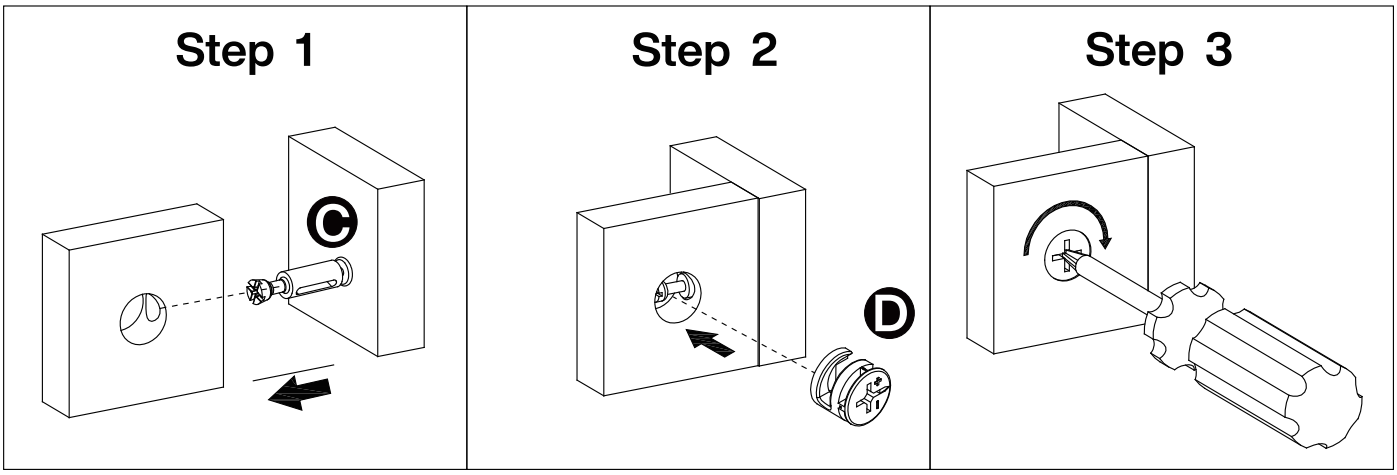

1

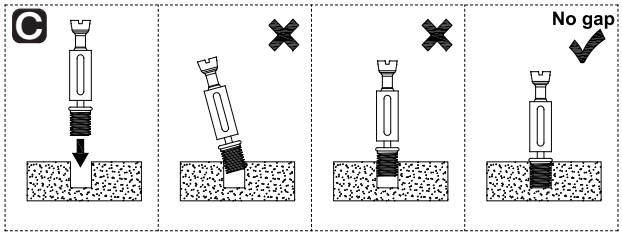

C

M6×44.5mm
24 pcs

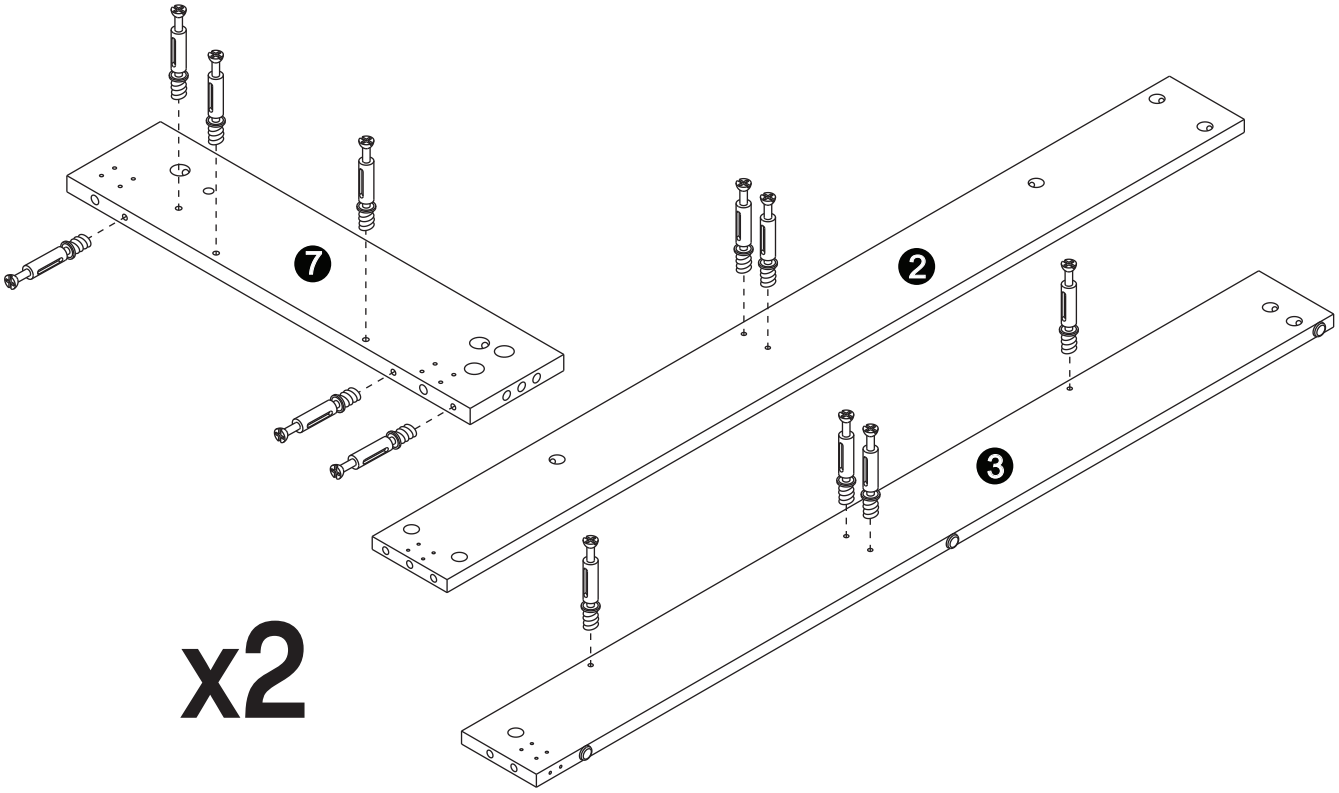

x2

2

E

Ø8×30mm
10 pcs

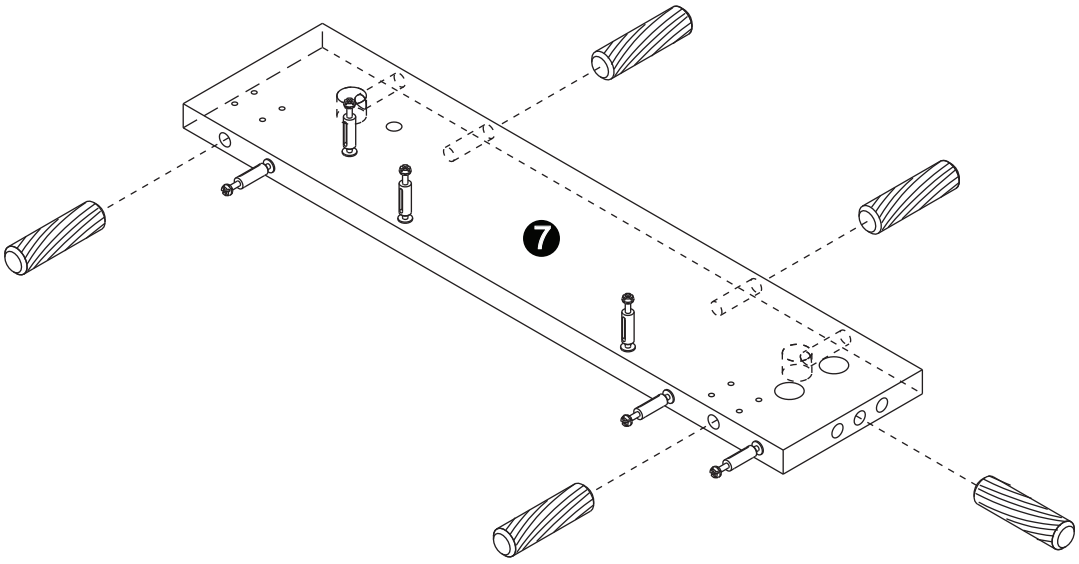

x2

3

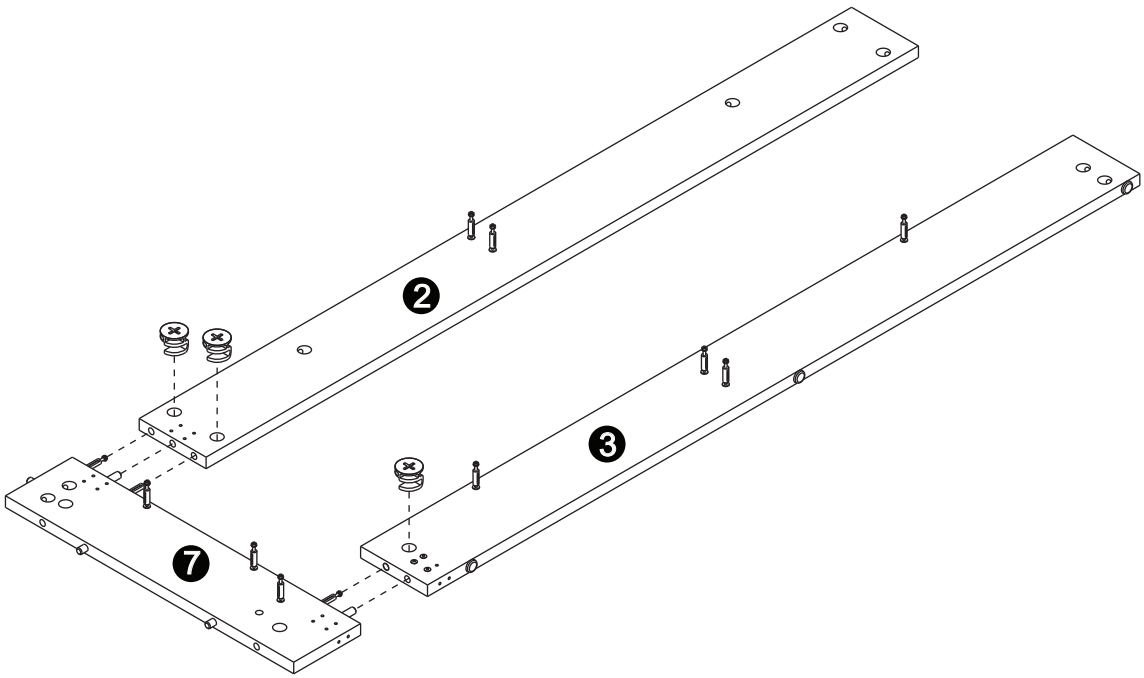

x2

D

Ø15mm
6 pcs

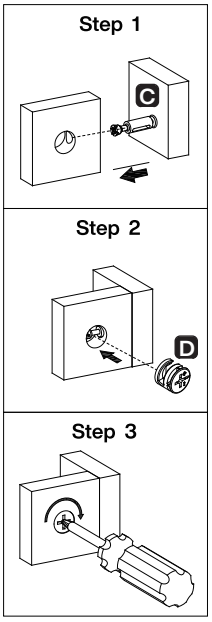

4

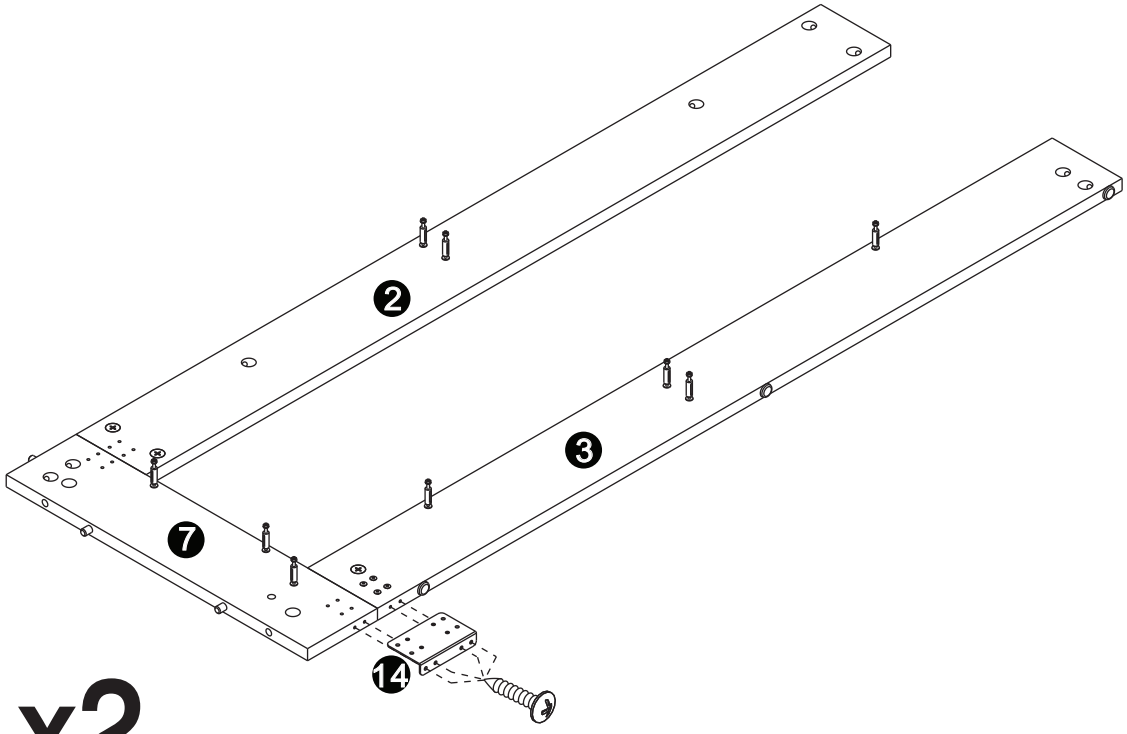

x2

G

Ø4x13.5mm
8 pcs

5

G

Ø4x13.5mm
16 pcs

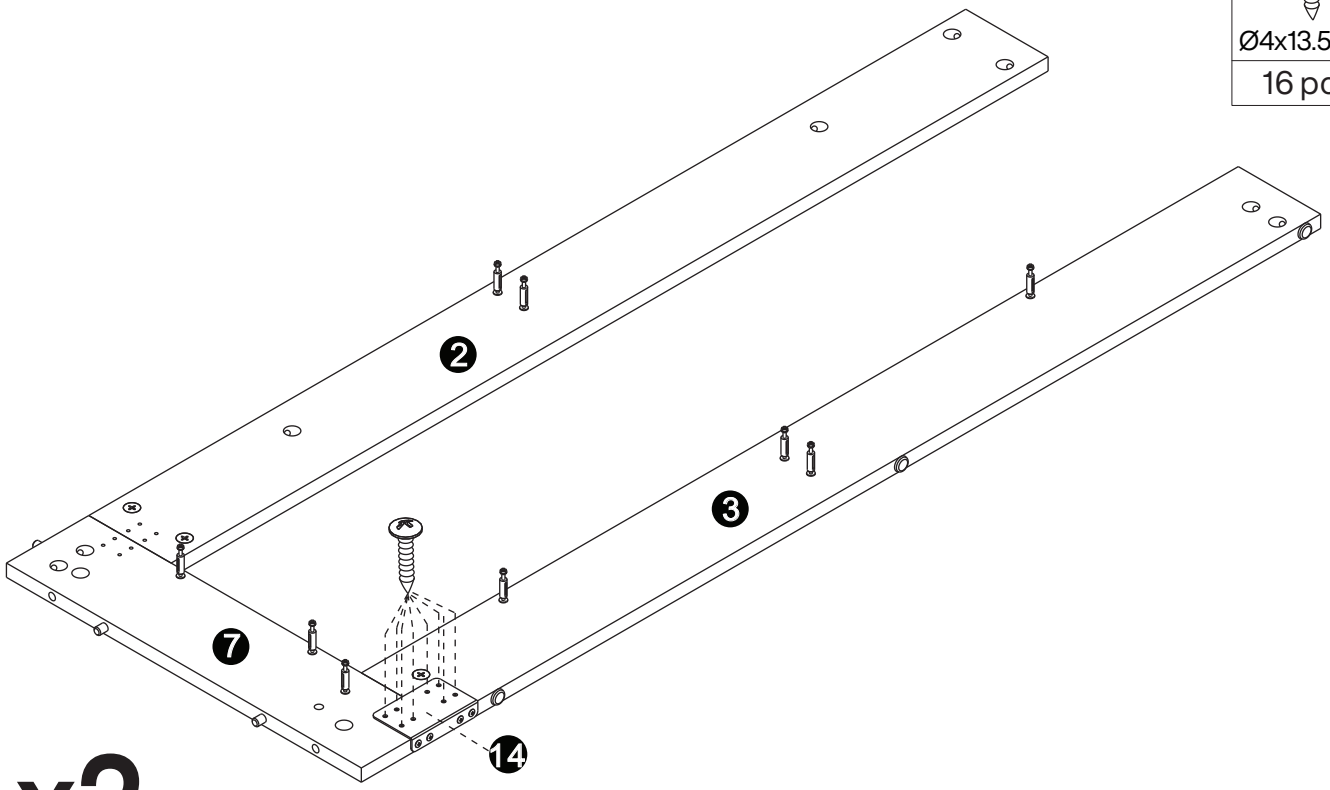

x2

6

G

Ø4x13.5mm
16 pcs

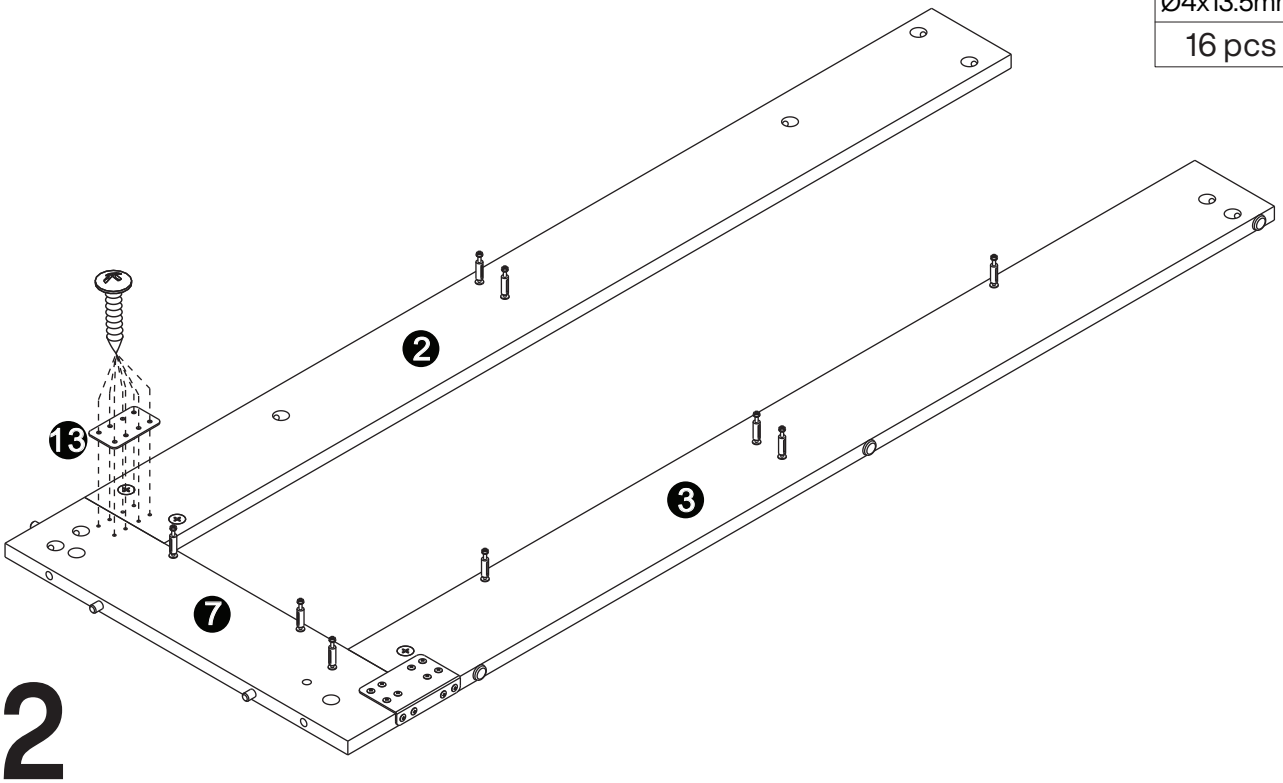

x2

7

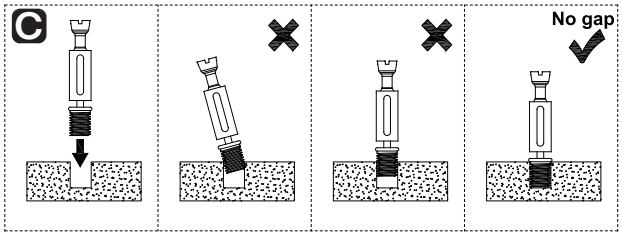

C

M6×44.5mm
30 pcs

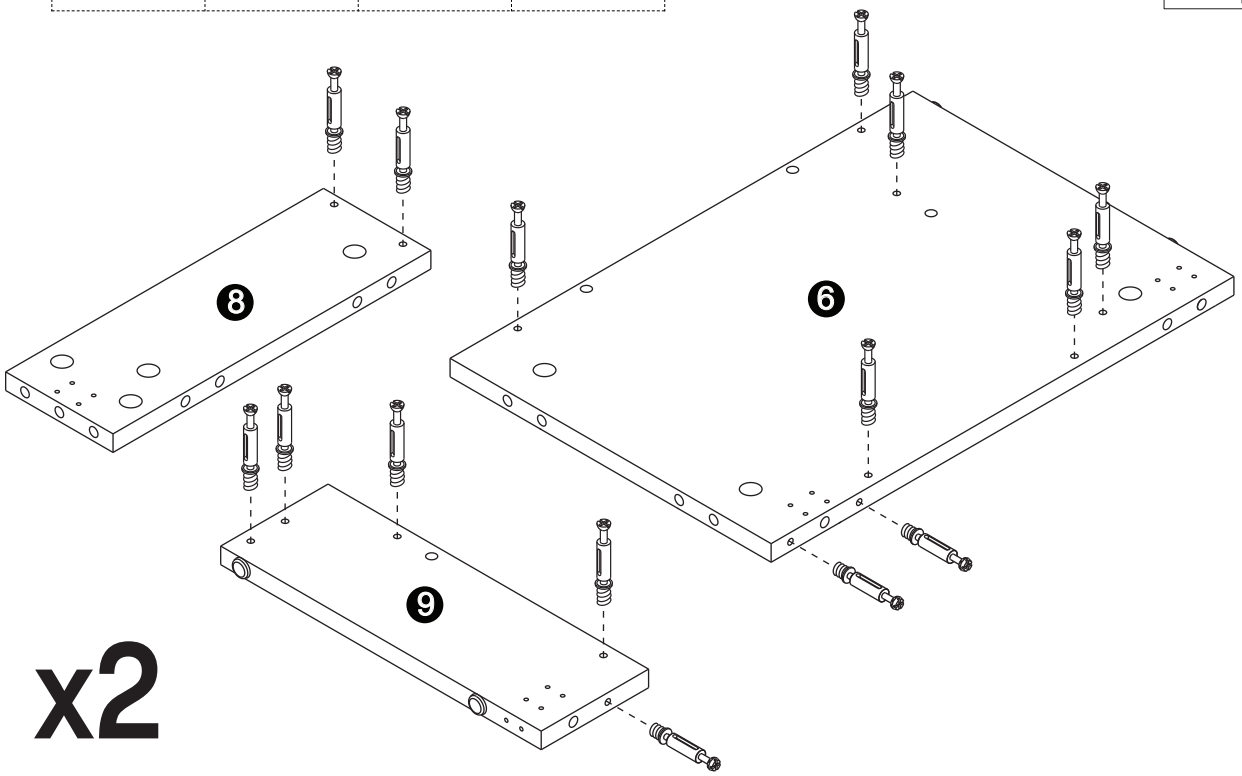

x2

8

E

Ø8×30mm
12 pcs

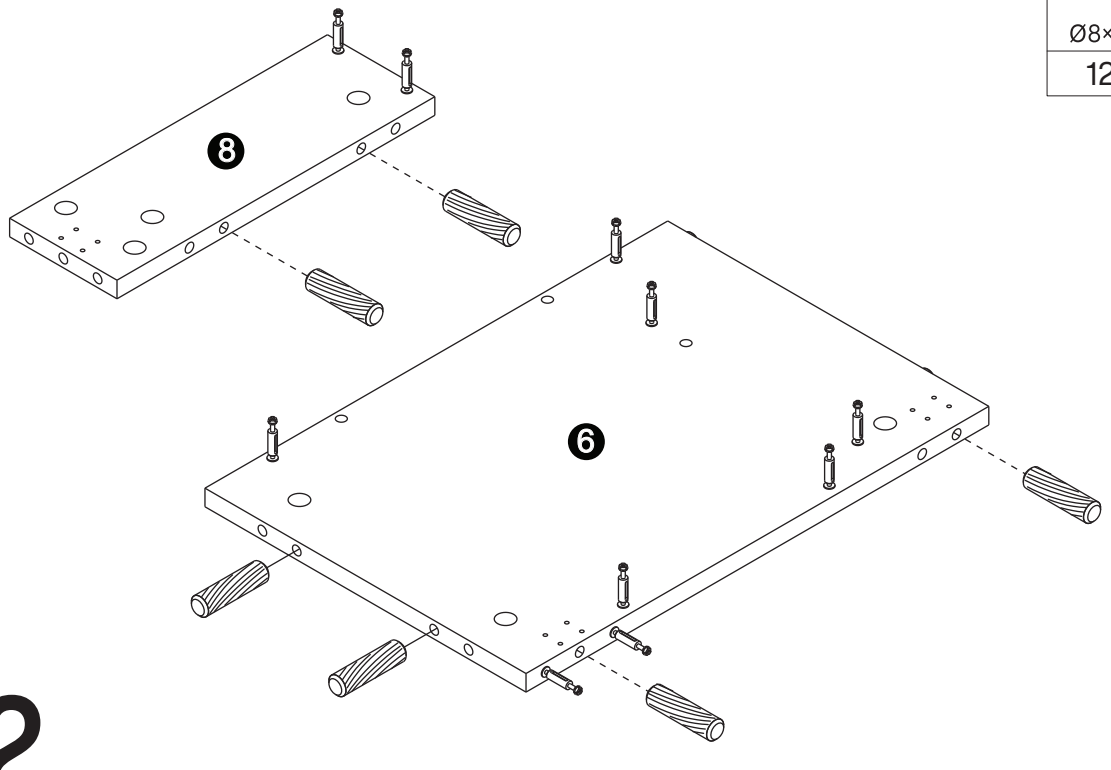

x2

9

D

Ø15mm
4 pcs

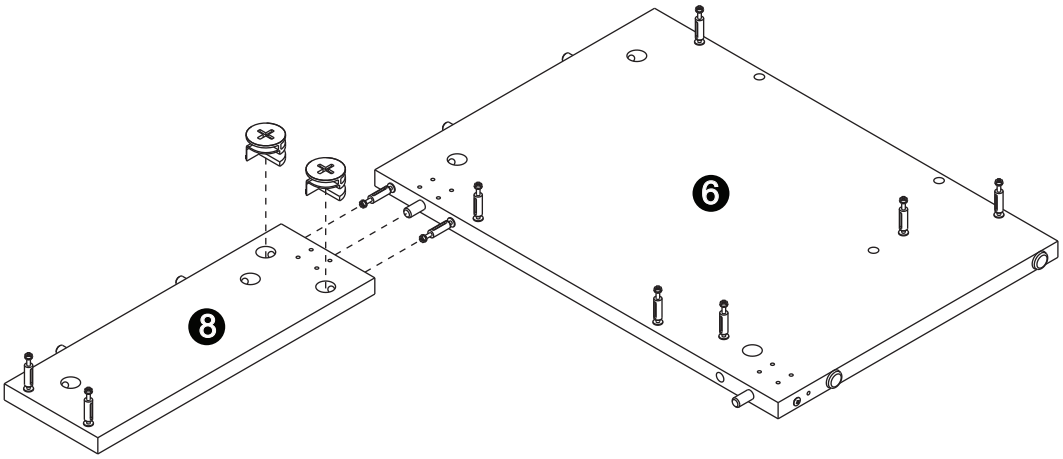

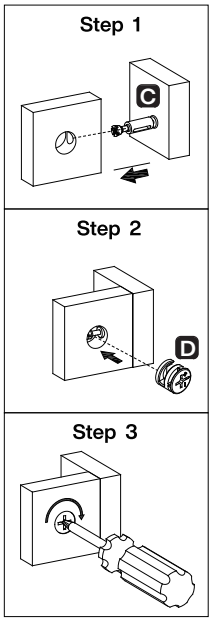

x2

10

G

Ø4x13.5mm
16 pcs

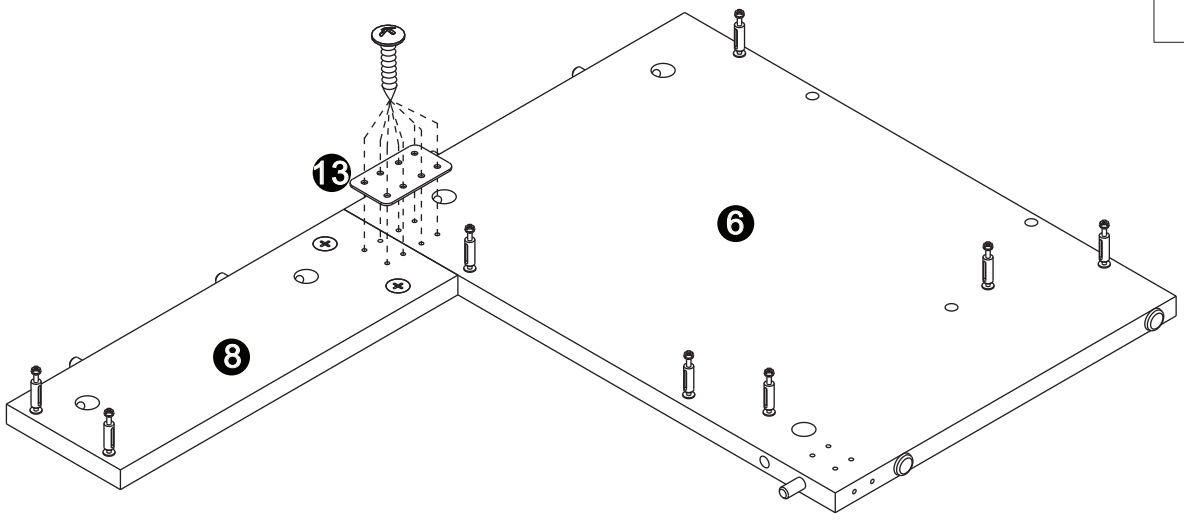

x2

11

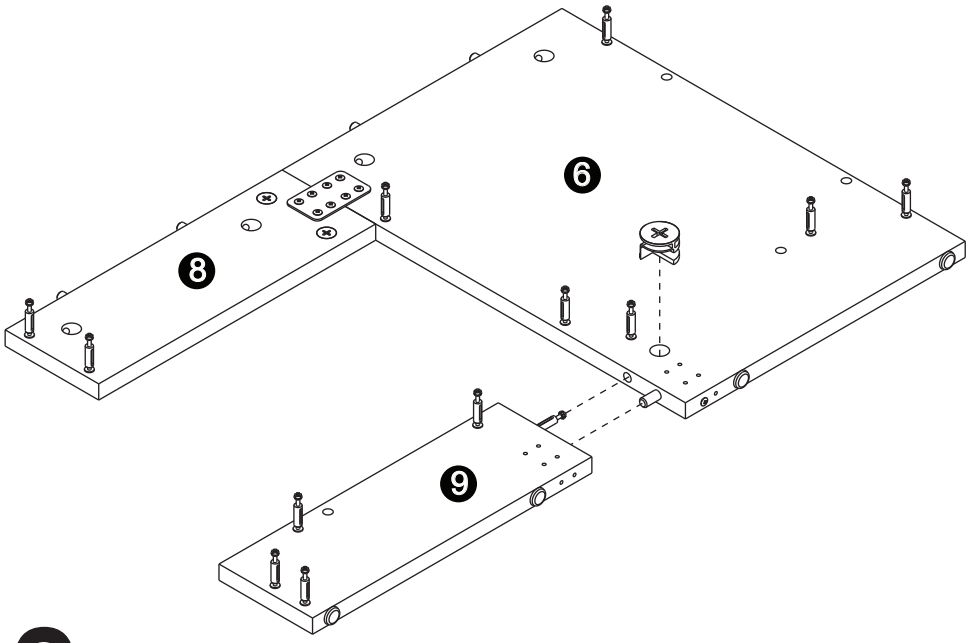

x2

D

Ø15mm
2 pcs

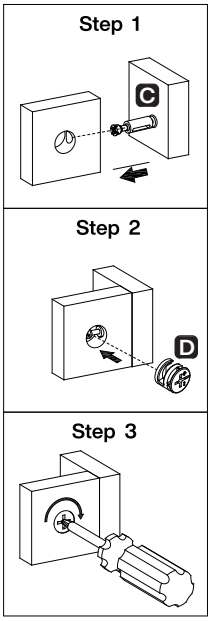

12

G

Ø4x13.5mm
8 pcs

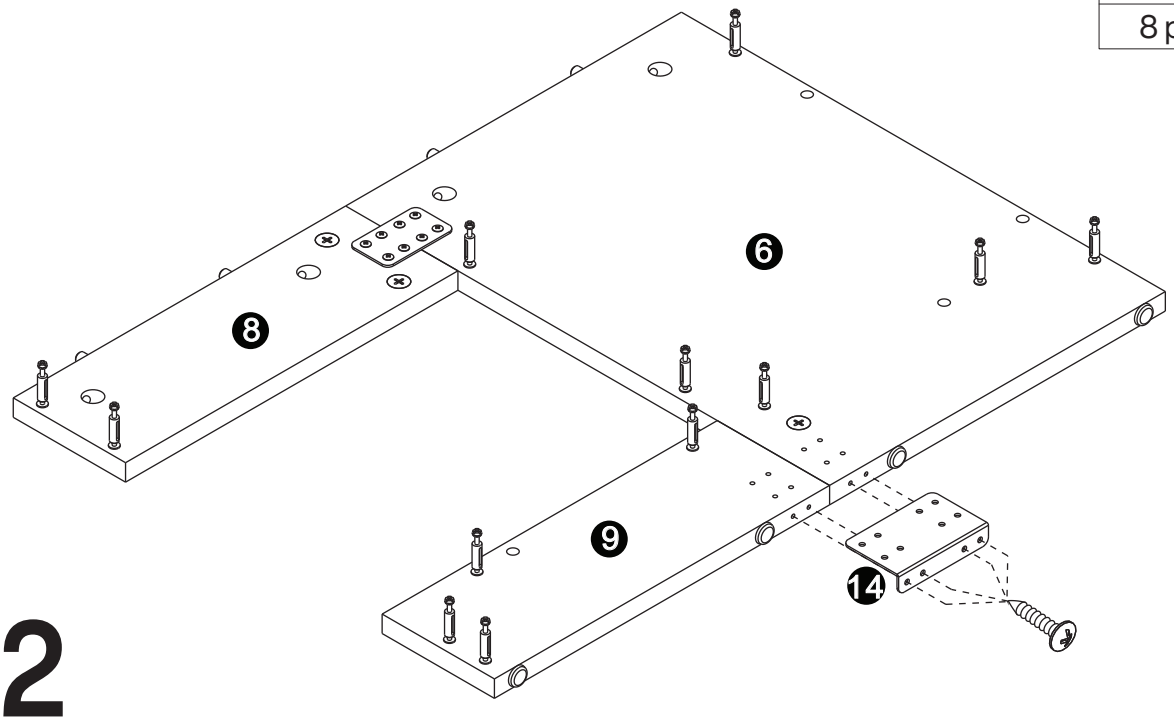

x2

13

G

Ø4x13.5mm
16 pcs

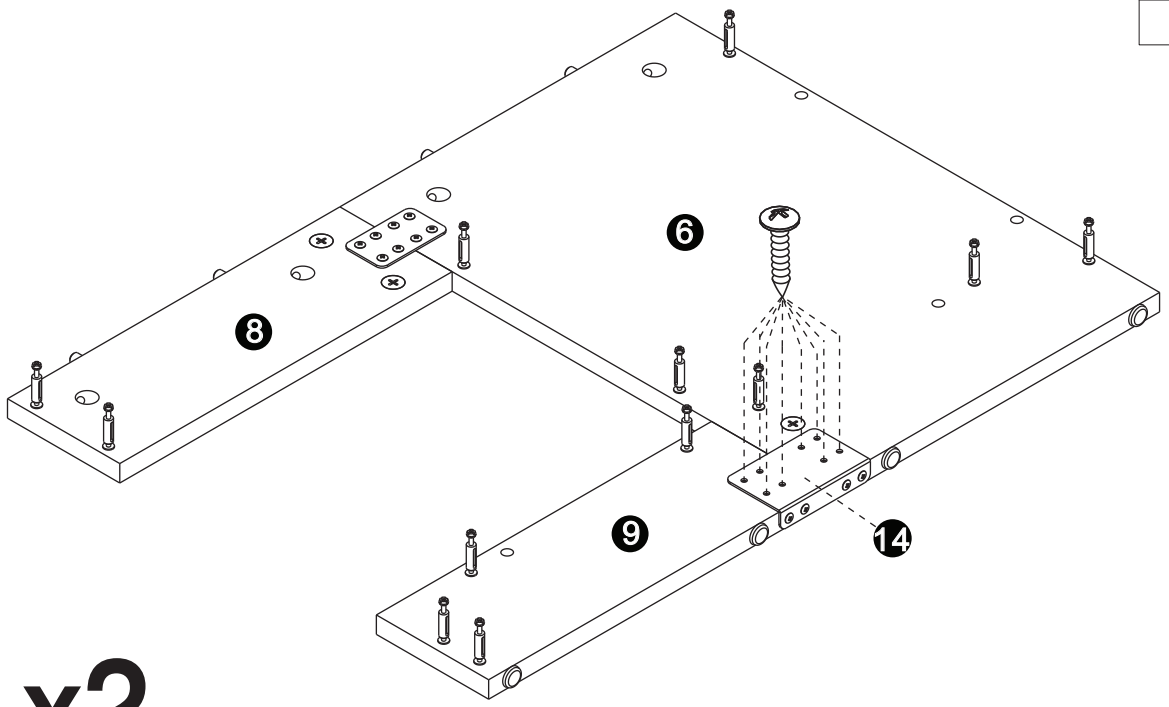

x2

14

D

Ø15mm
4 pcs

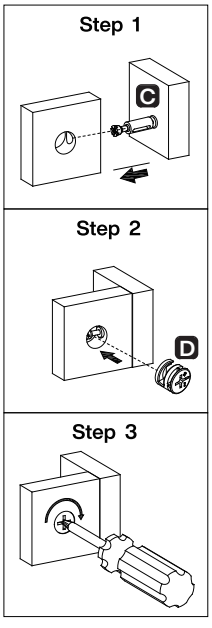

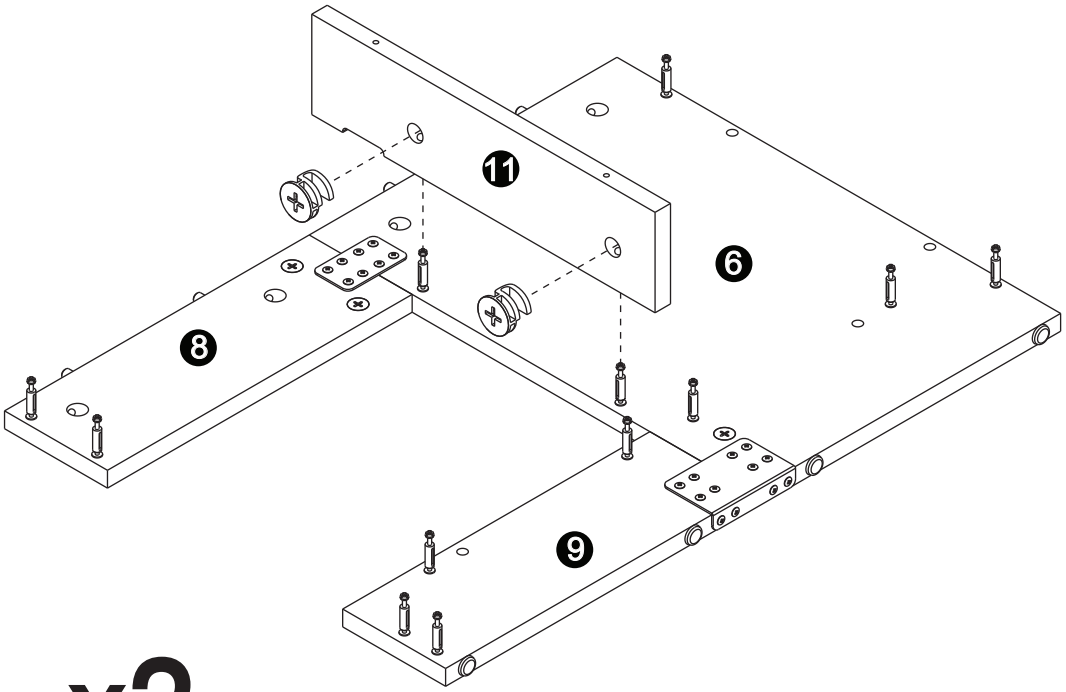

x2

15

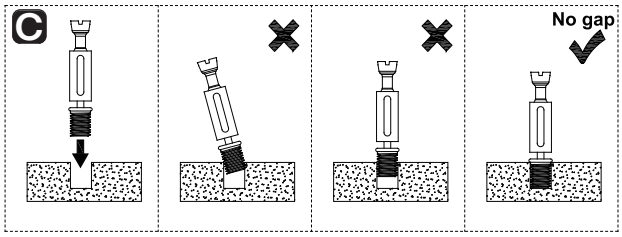

C

M6×44.5mm
2 pcs

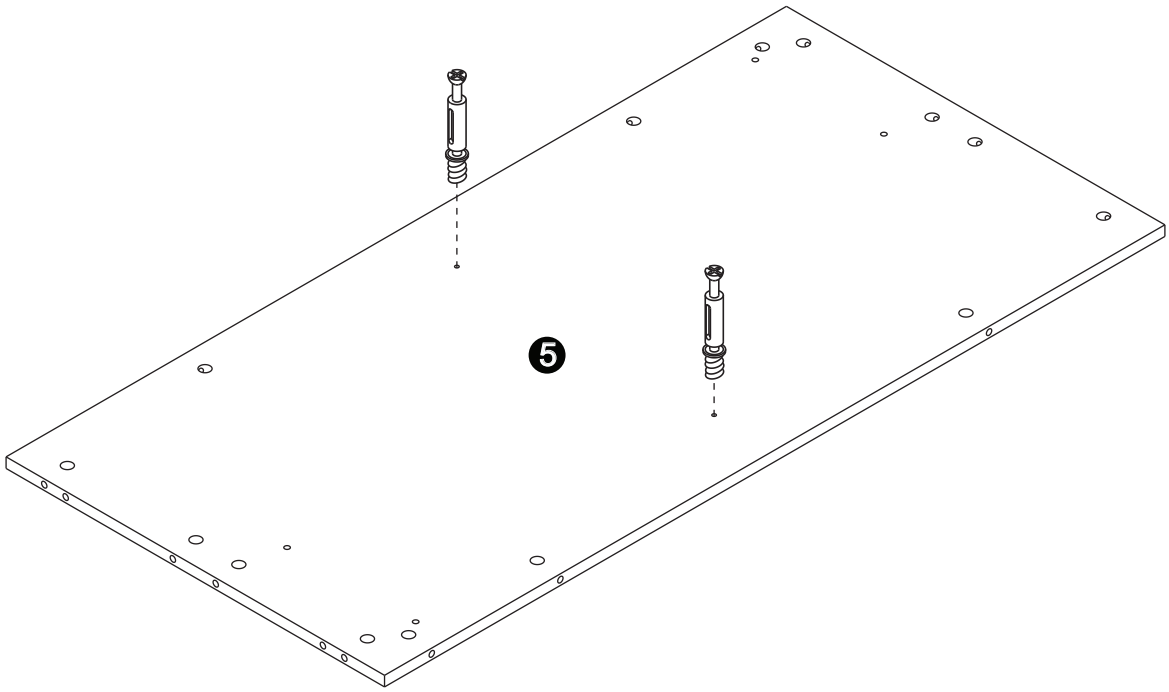

16

E

Ø8×30mm
4 pcs

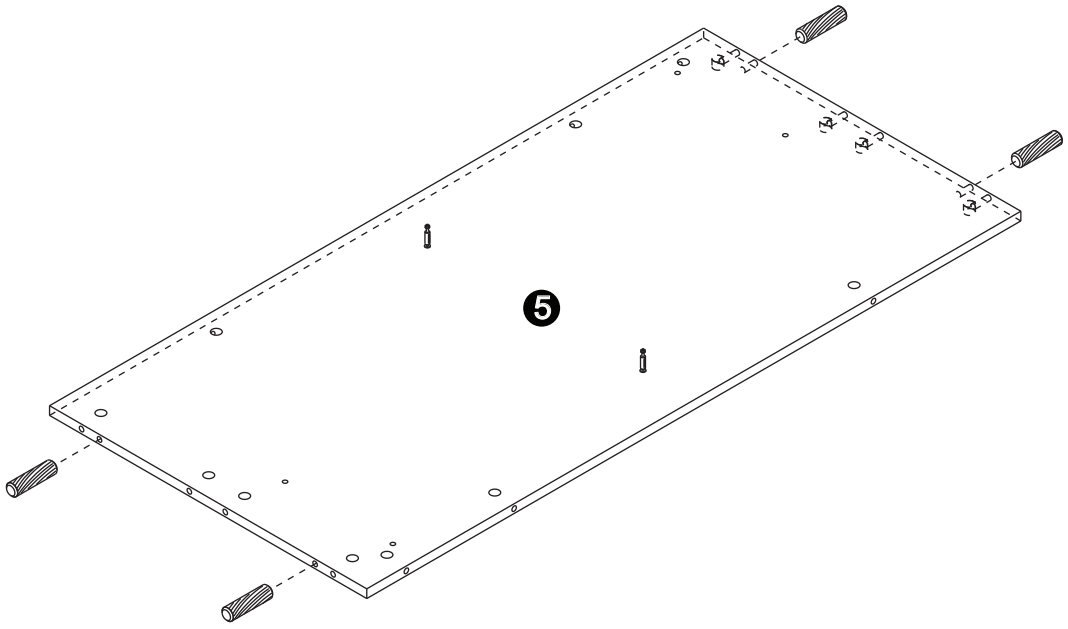

17

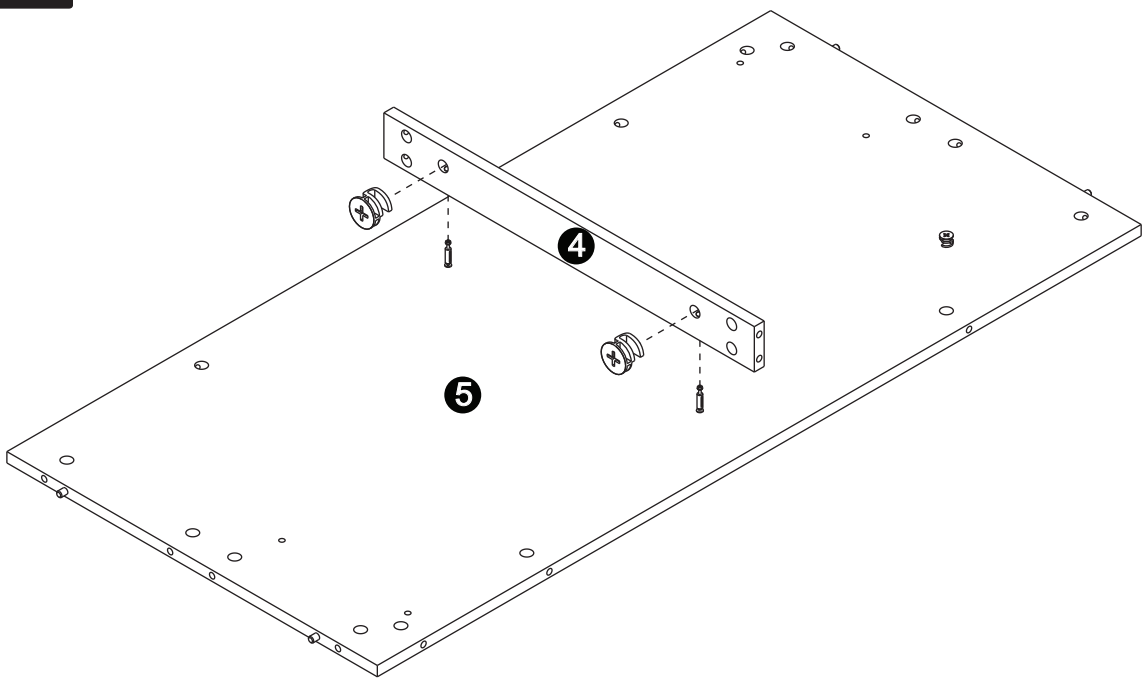

D

Ø15mm
2 pcs

Step 1

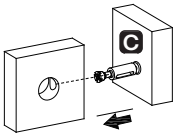

Step 2

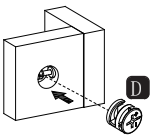

Step 3

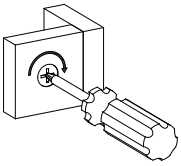

18

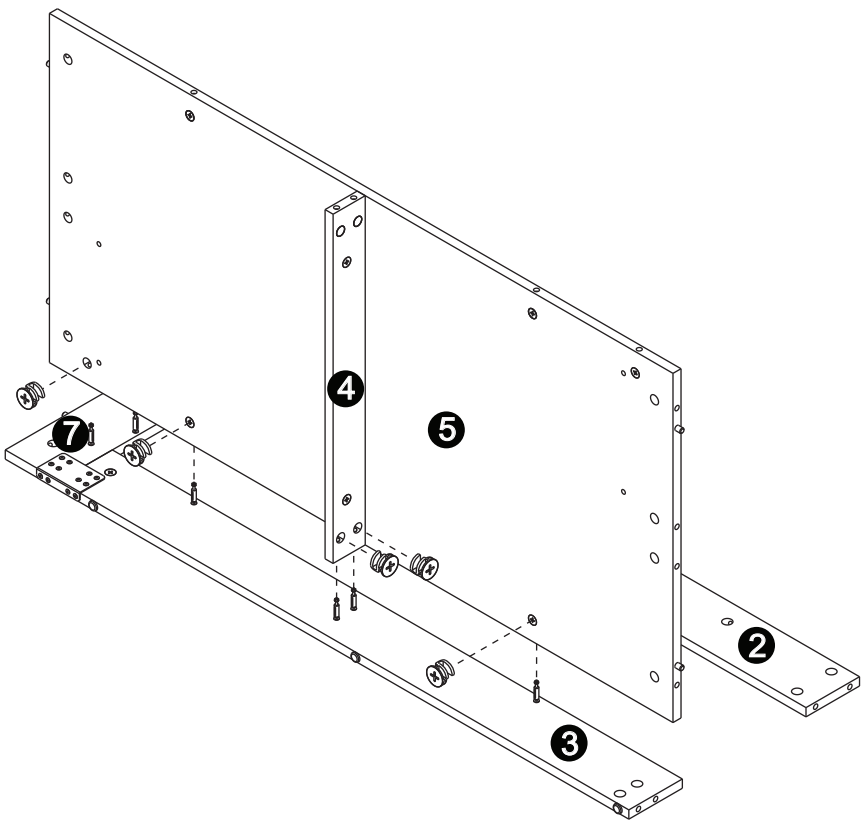

D

Ø15mm
5 pcs

Step 1

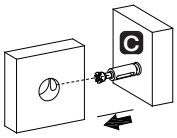

Step 2

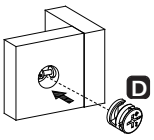

Step 3

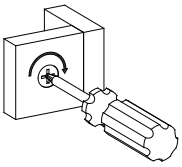

19

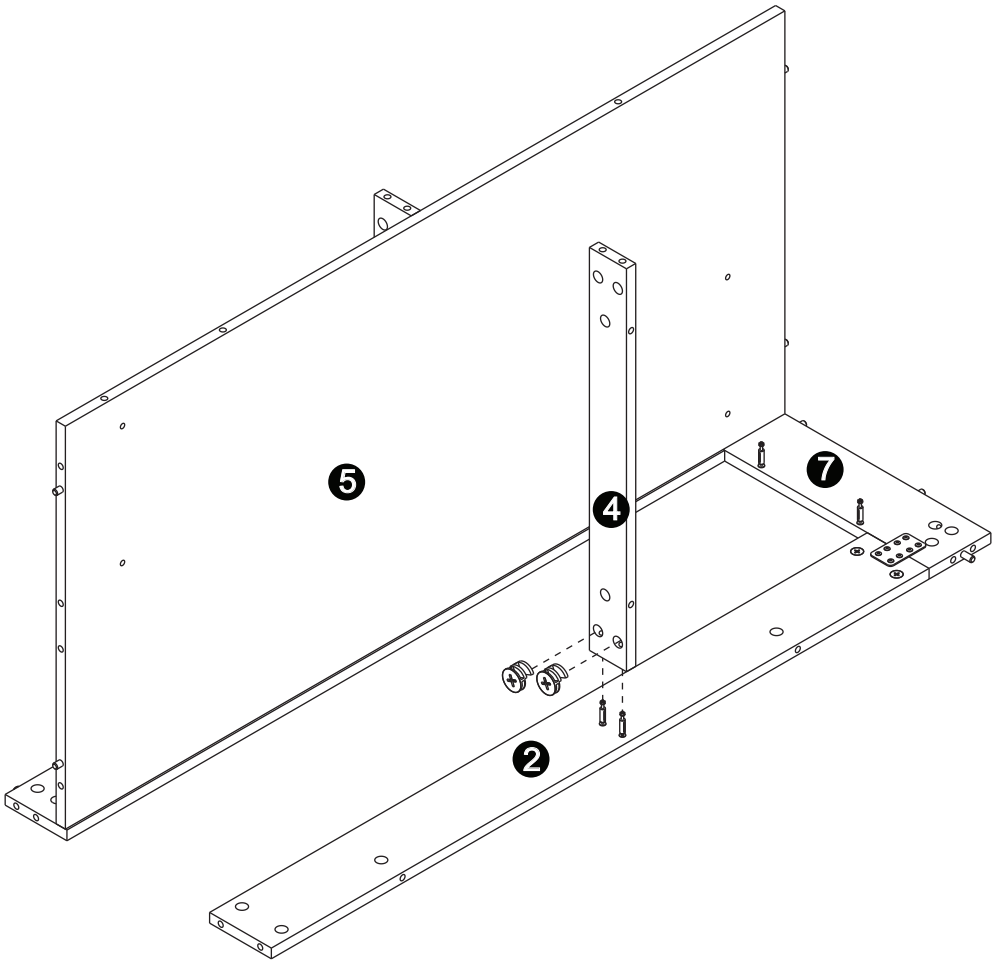

D

Ø15mm
2 pcs

Step 1

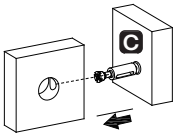

Step 2

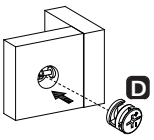

Step 3

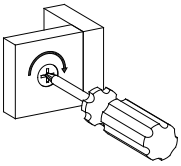

20

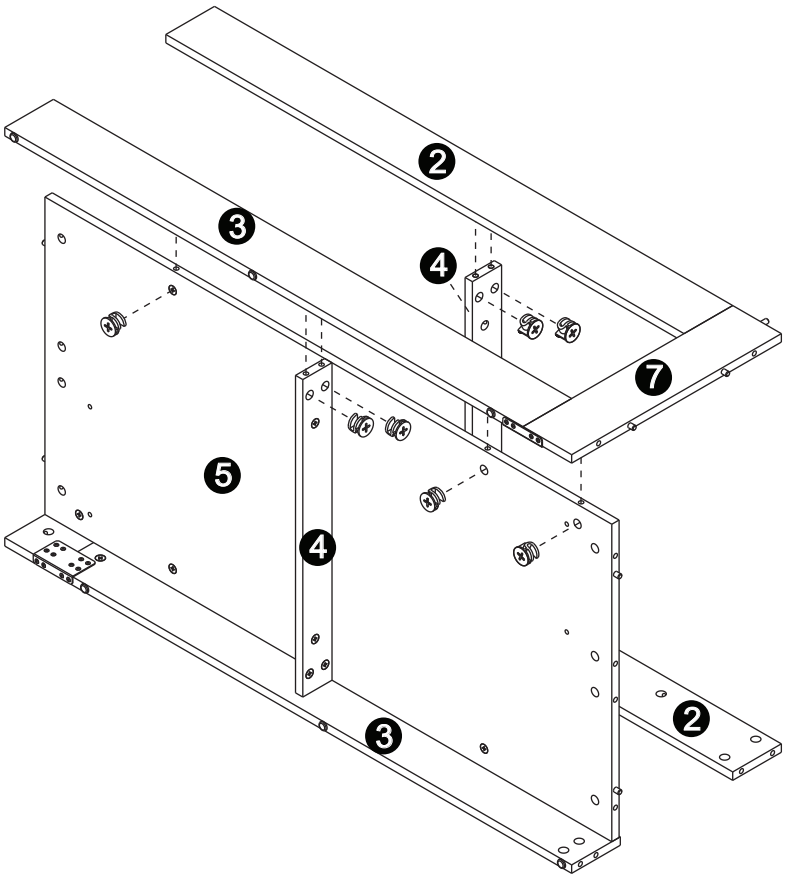

D

Ø15mm
7 pcs

Step 1

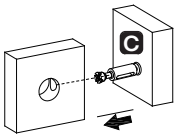

Step 2

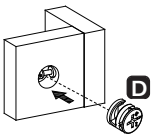

Step 3

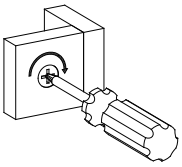

21

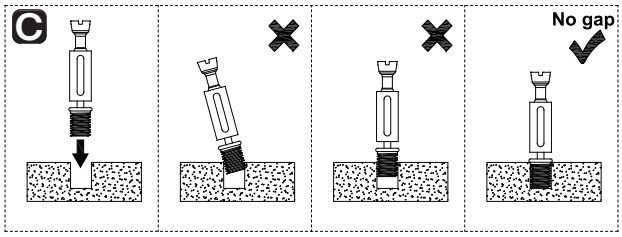

C

M6×44.5mm
18 pcs

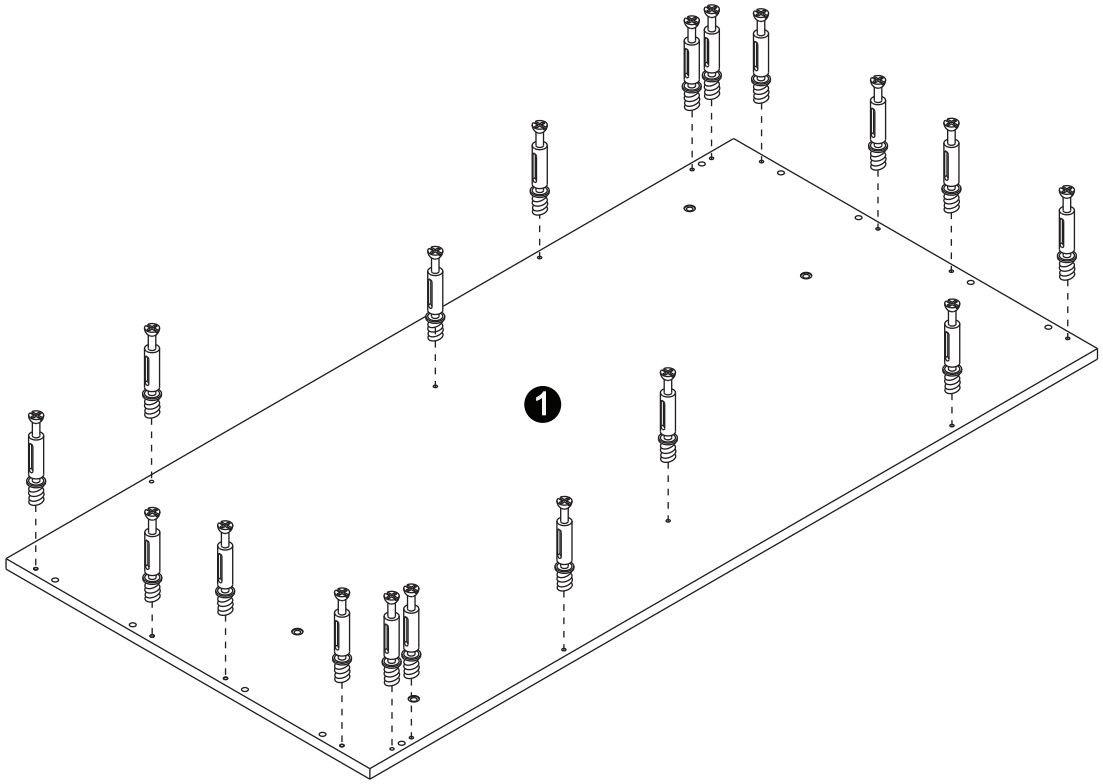

22

A

M6×12mm
4 pcs

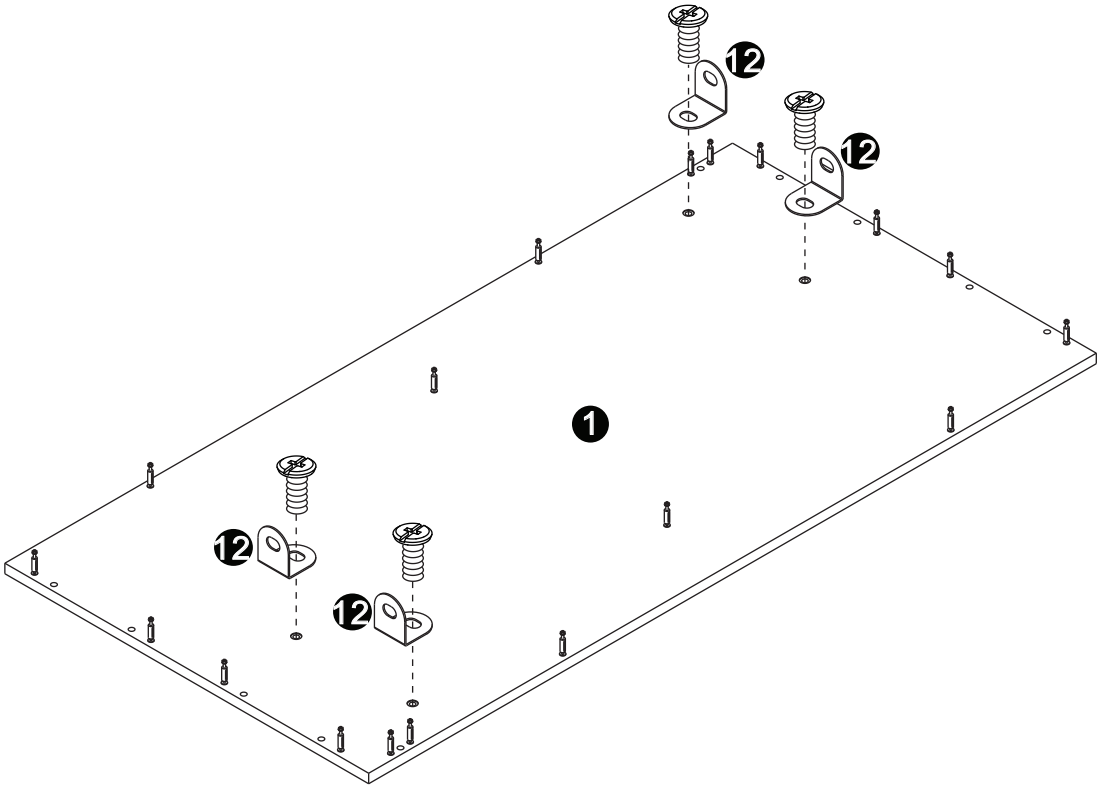

23

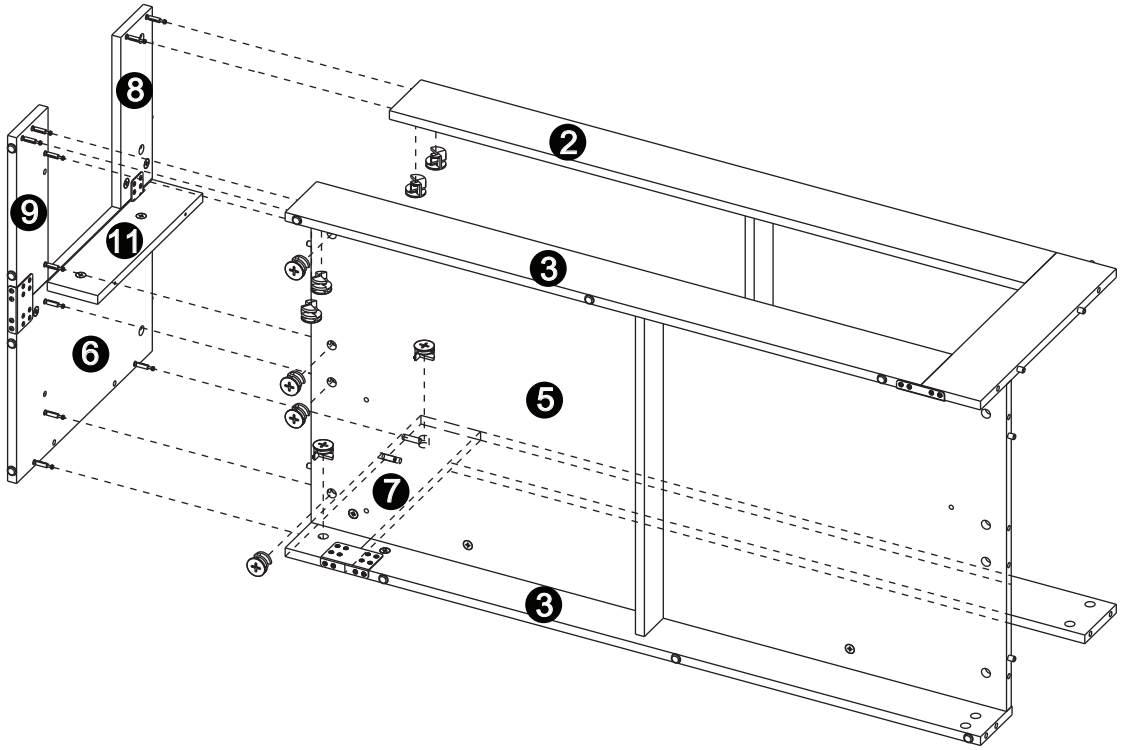

D

Ø15mm
10 pcs

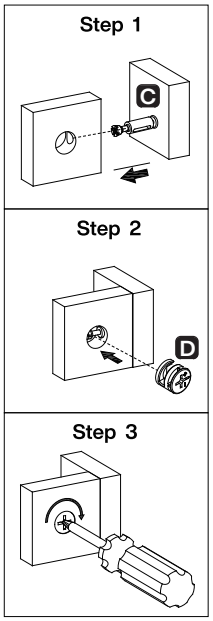

24

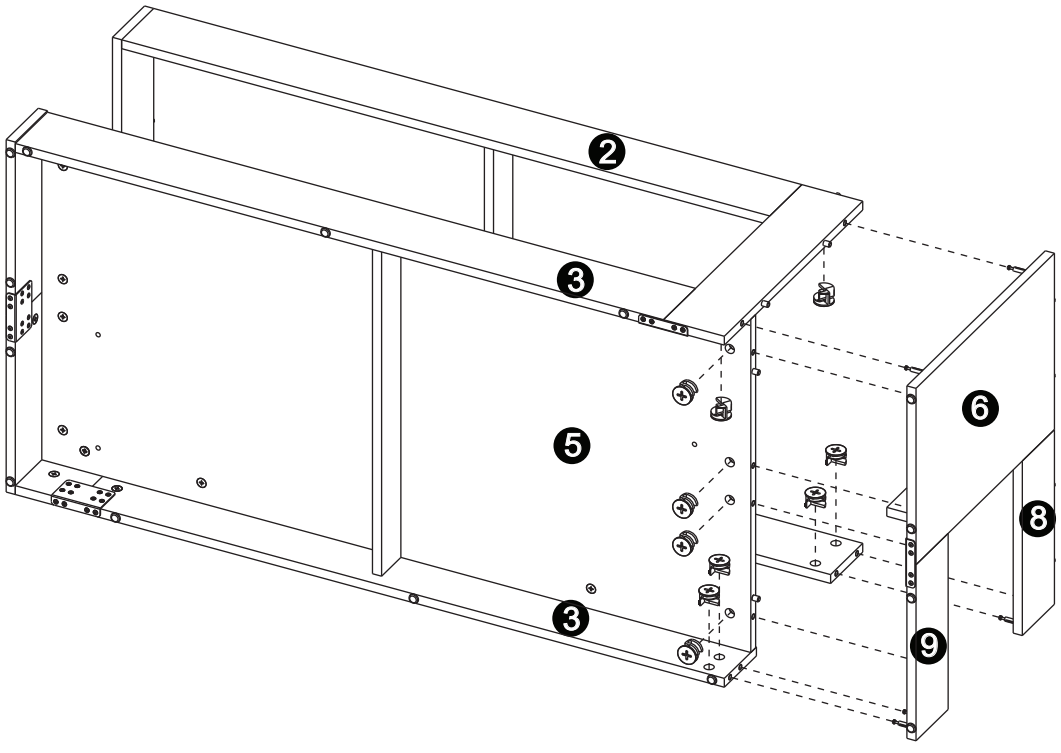

D

Ø15mm
10 pcs

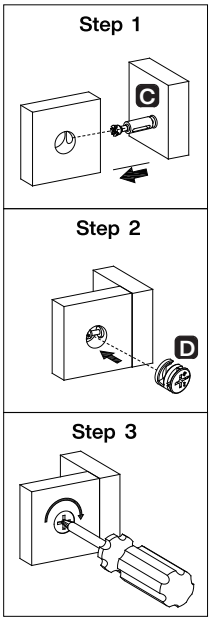

25

D

Ø15mm
18 pcs

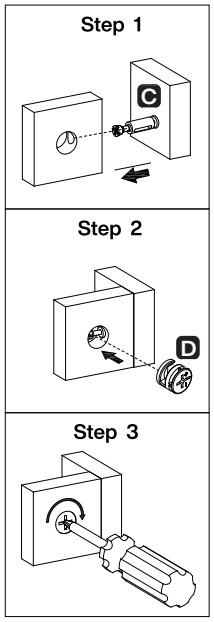

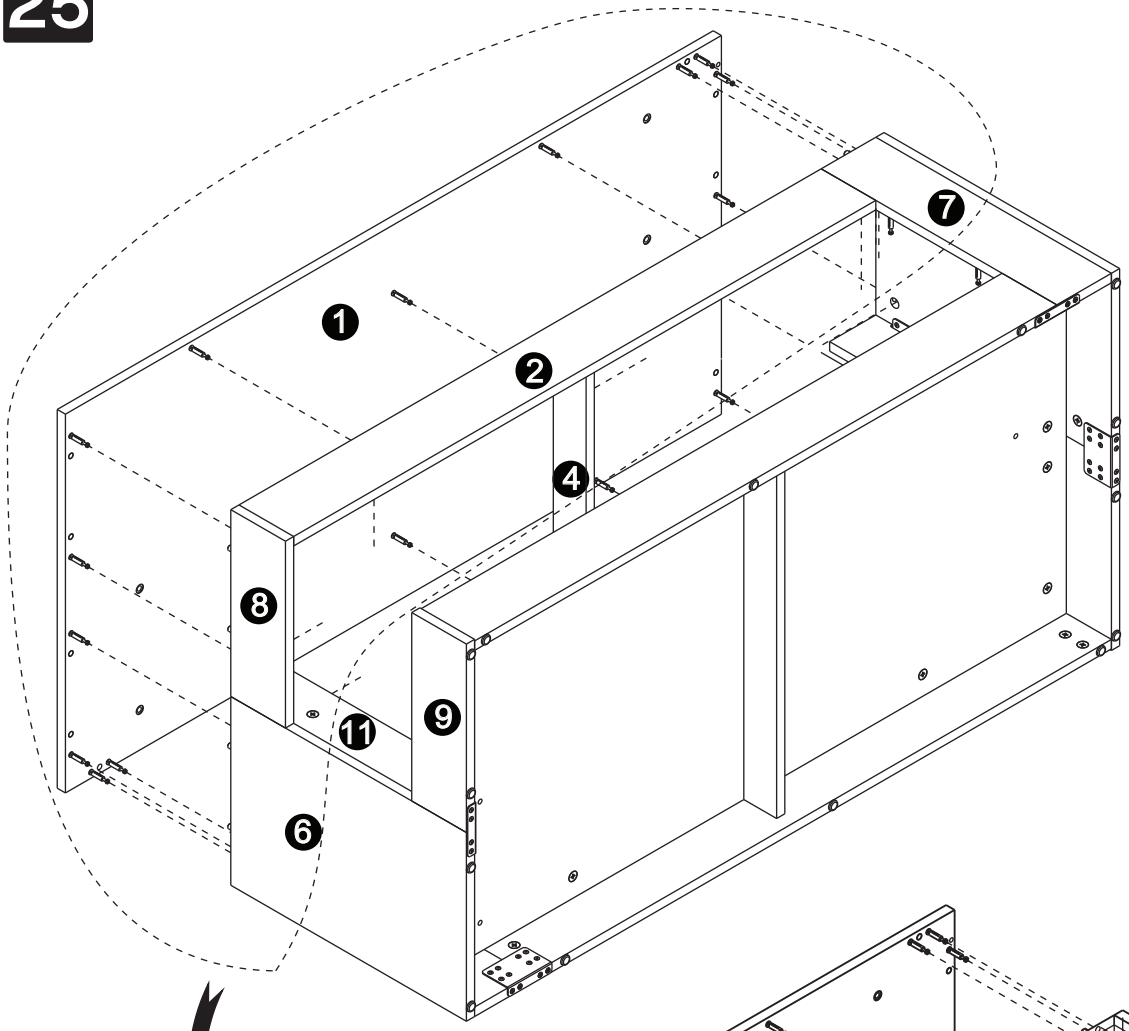

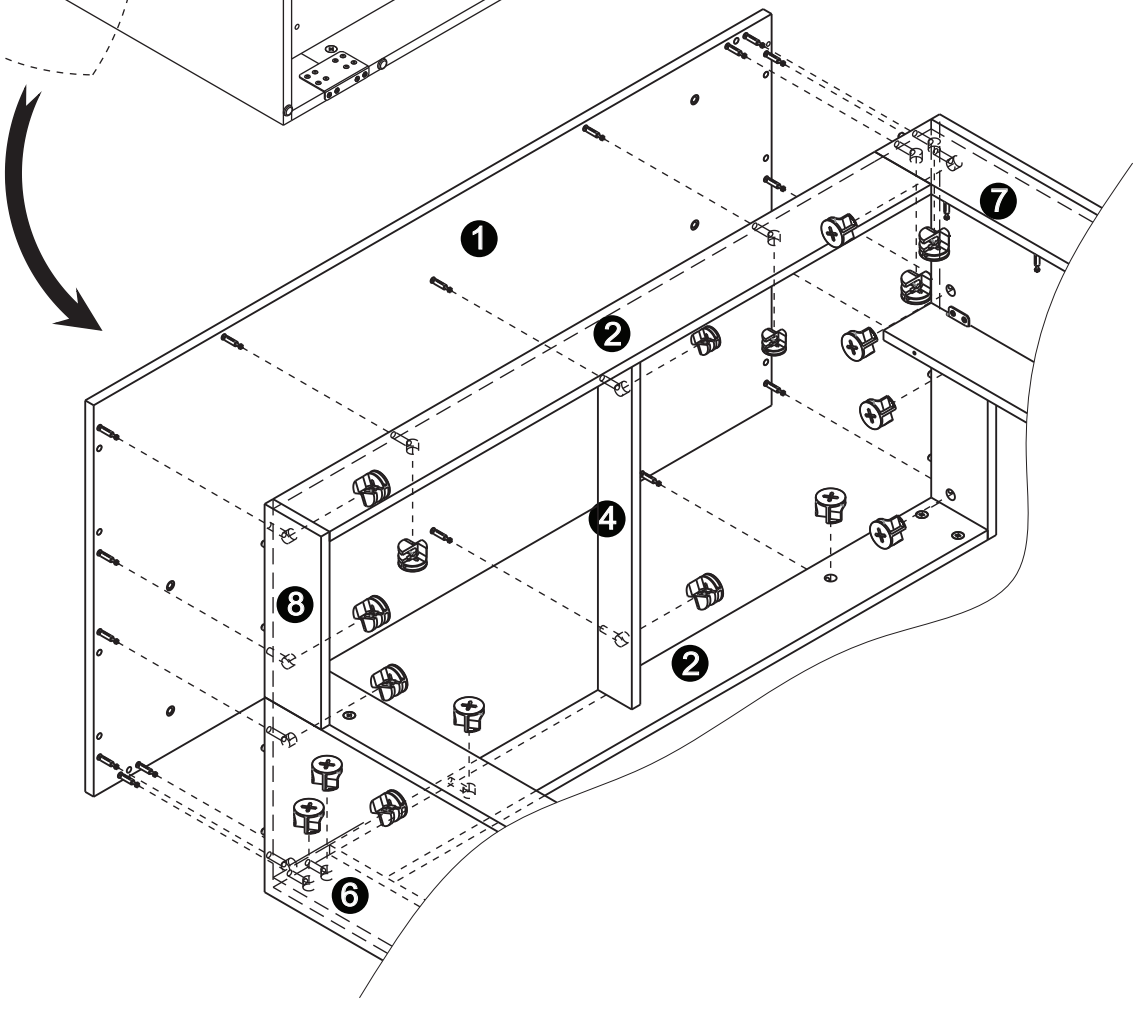

26

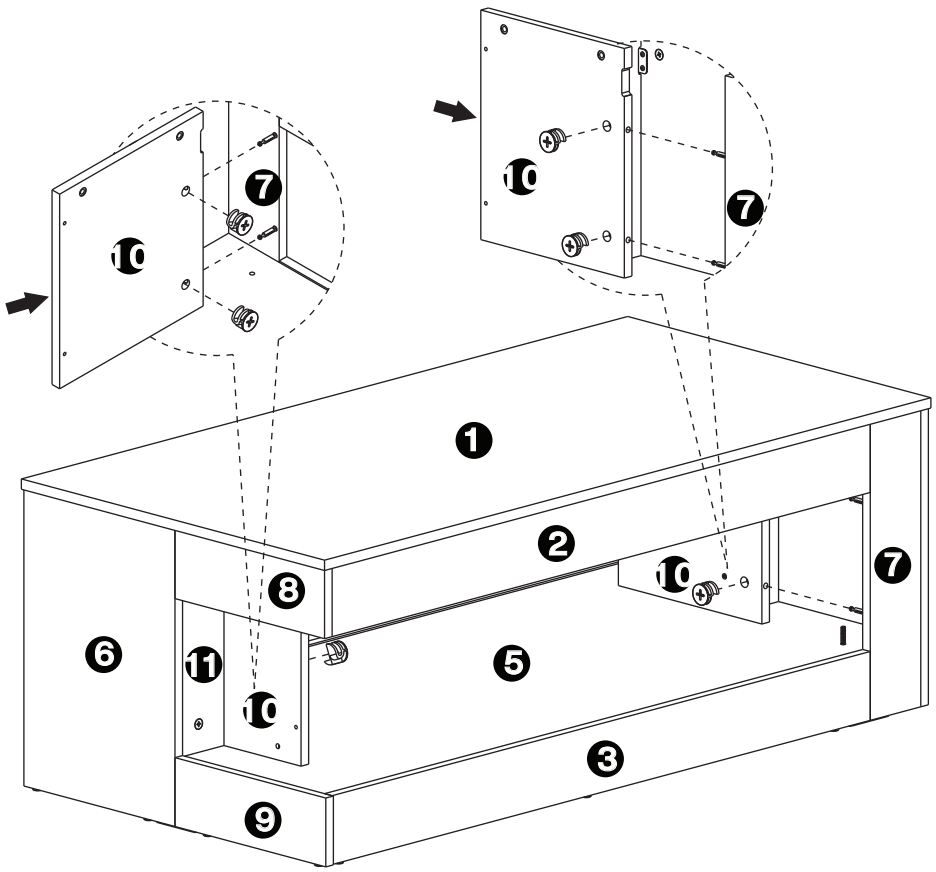

D
Ø15mm
4 pcs

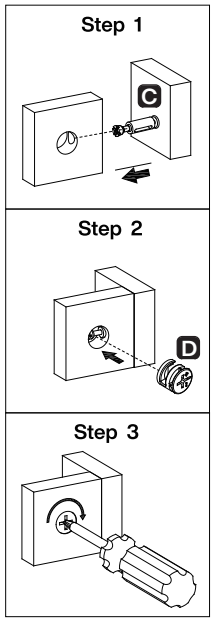

27

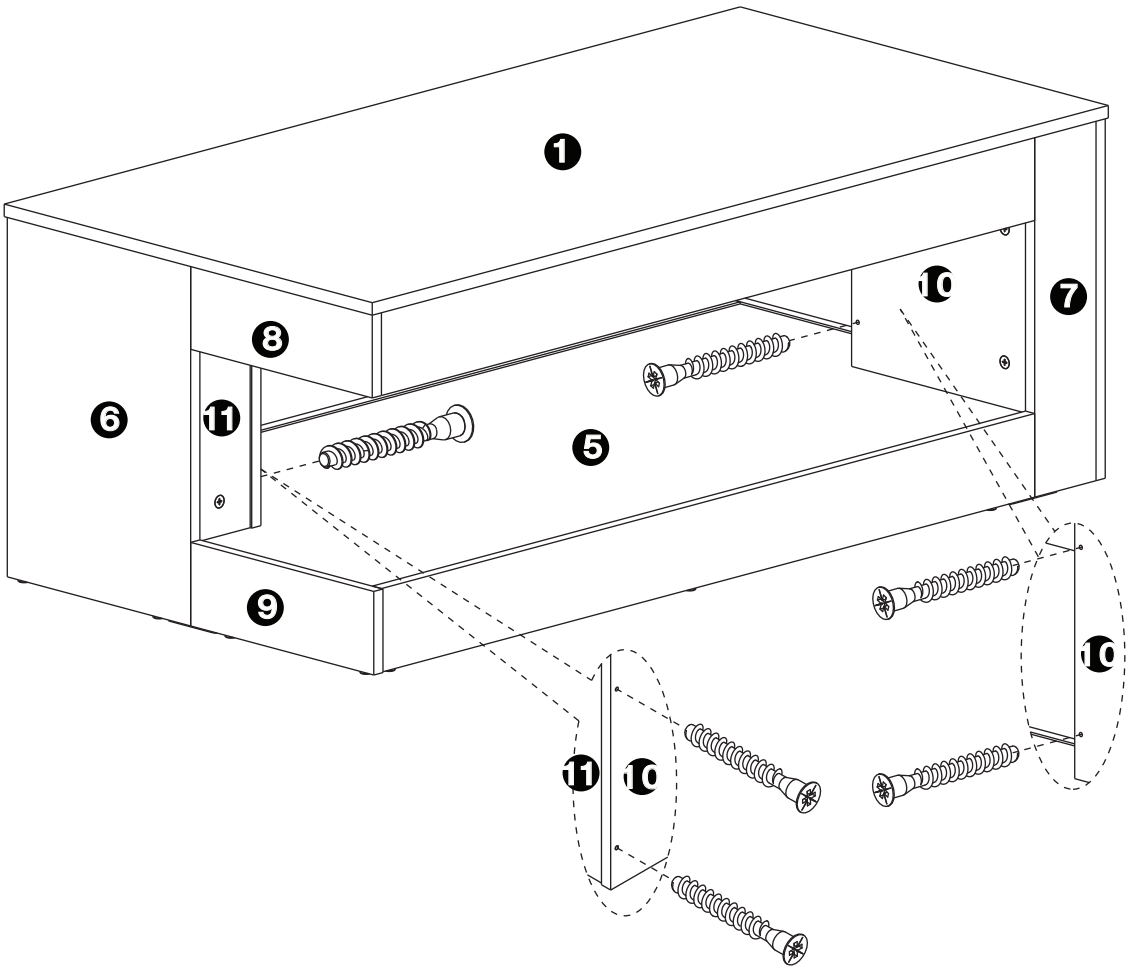

F
Ø5×38mm
4 pcs

28

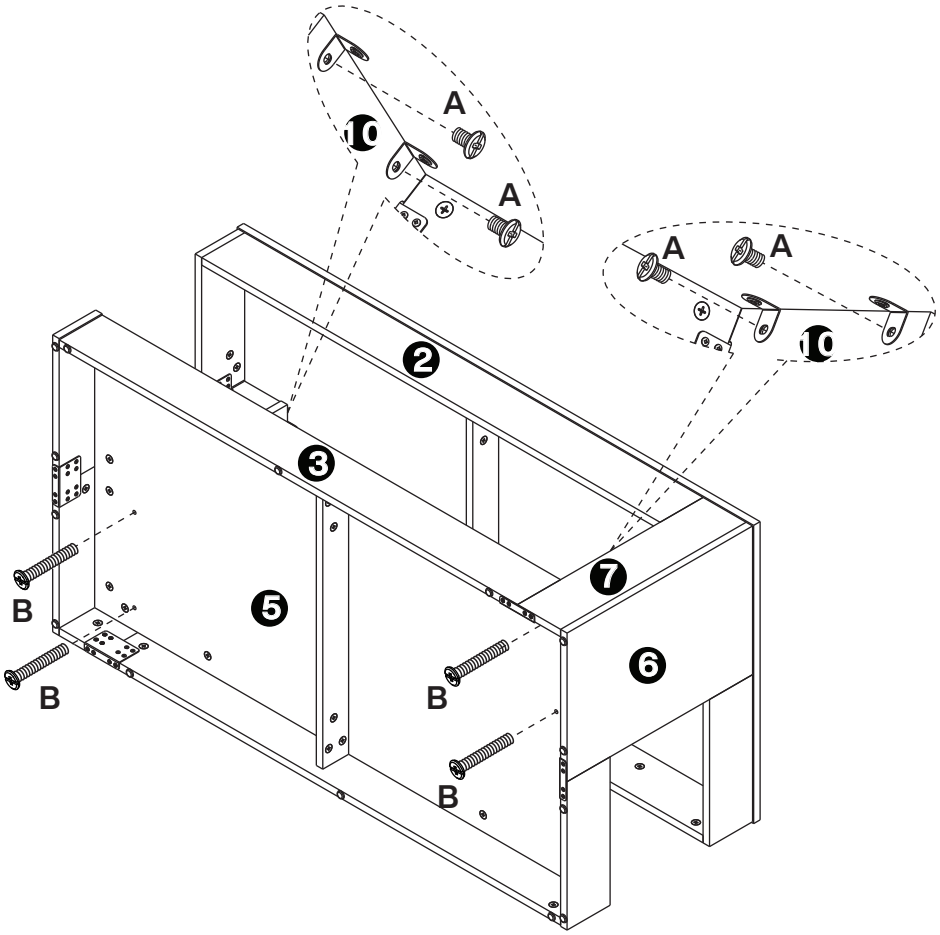

A	B
	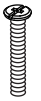
M6×12mm	M6×40mm
4 pcs	4 pcs

29

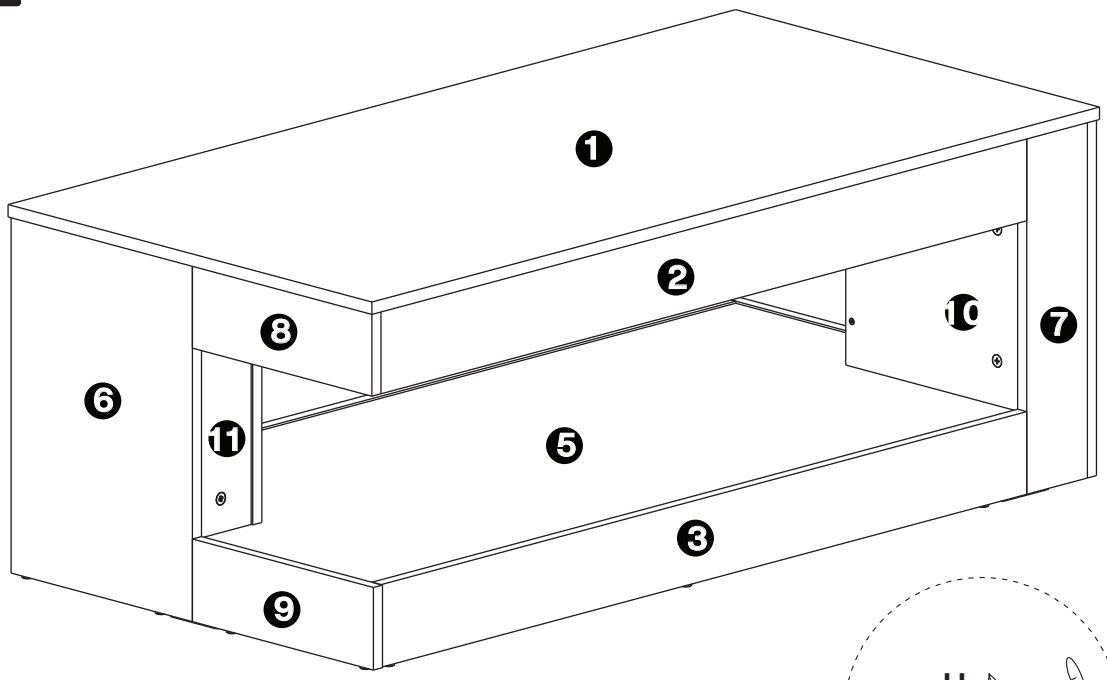

H
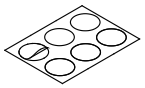
Ø21mm
6 pcs

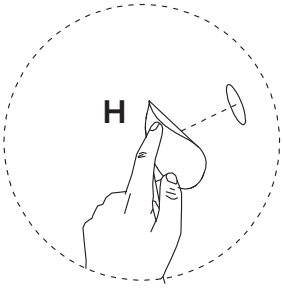

Thank you for your support!

