Unit: inch

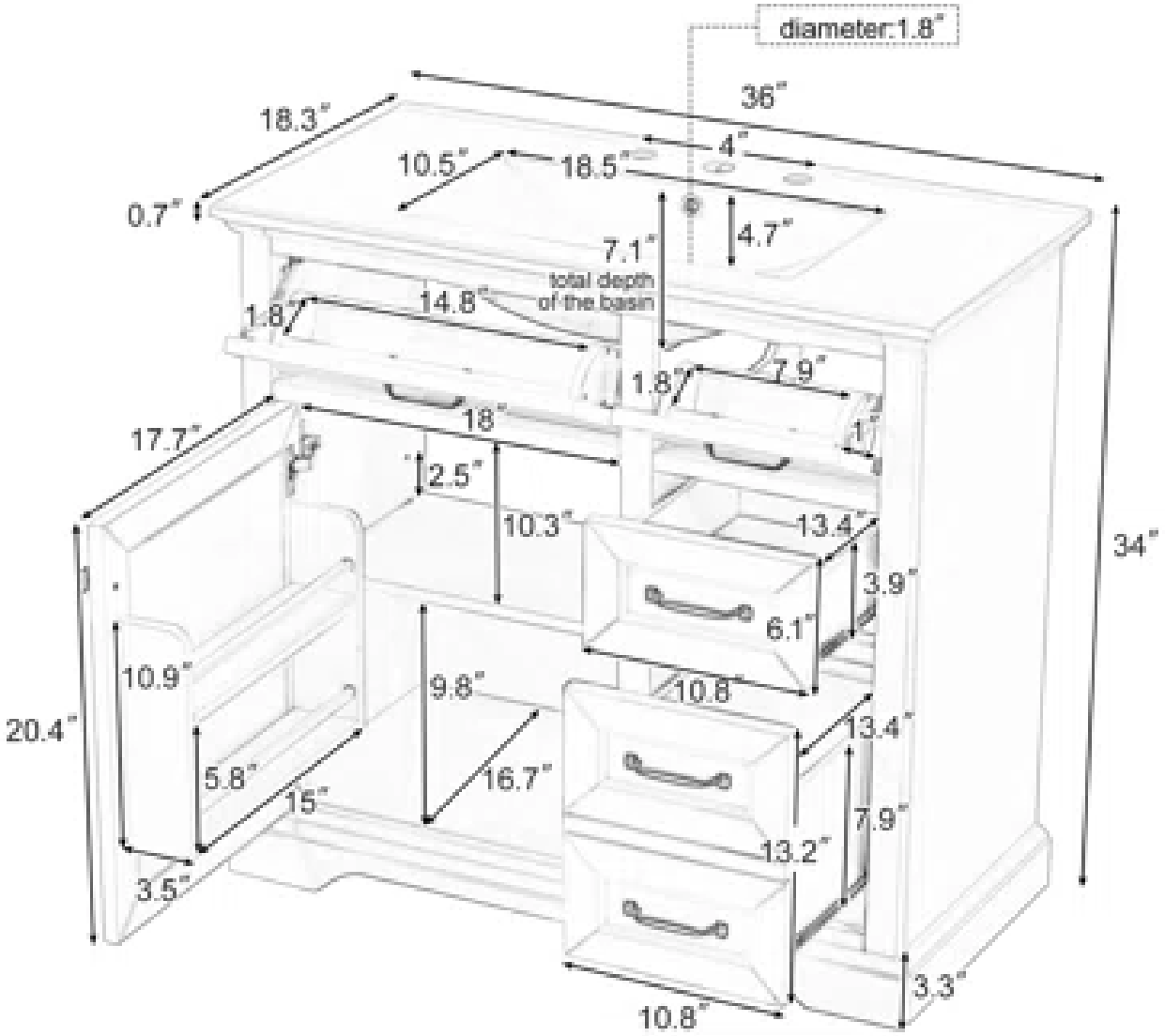
diameter:1.8"
36"
18.3"
4"
10.5"
18.5"
0.7"
4.7"
7.1"
total depth
of the basin
1.8"
14.8"
1.8"
7.9"
17.7"
18"
1"
2.5"
10.3"
13.4"
34"
3.9"
6.1"
10.9"
9.8"
10.8"
20.4"
13.4"
5.8"
16.7"
15"
7.9"
13.2"
3.5"
3.3"
10.8"