SLIDE-IN GAS RANGE

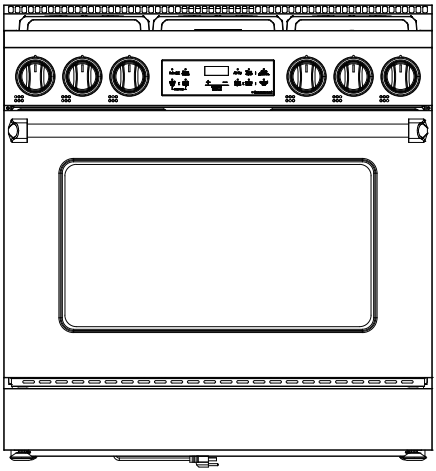

USER MANUAL

IMPORTANT: **READ AND SAVE THESE INSTRUCTIONS.**
FOR RESIDENTIAL USE ONLY.

INSTALLER: **PLEASE LEAVE THESE INSTRUCTIONS WITH THIS UNIT FOR THE OWNER.**

OWNER: **PLEASE RETAIN THESE INSTRUCTIONS FOR FUTURE REFERENCE.**

Email: **support@ tittla.com**

TABLE OF CONTENTS

Range Safety **5**
Anti-Tip Device 8
Important Safety Instructions 9
Overview **13**
Range Layout 13
Accessories Included 15
Operation **16**
Control Panel 16
Features 18
Clock 18
Timer 19
Oven Light 20
Oven Control Lock 20
Oven Settings 21
Cook Time 22
Delay Start 24
Gas Surface Burners 26
Before Using the Gas Surface Burners 26
Using the Gas Surface Burners 27
Using the Proper Cookware 29
Oven 31
Before Using the Oven 31
Before Using the Oven for the First Time 32
Oven Vent 32
Oven Door 33
Using Oven Racks 33
Preheating 35
Minimum & Maximum Default Settings 36
Bake 37
Convection Bake 38
Air Fry 40

Broil 41
Keep Warm 43
Tips and Techniques 44
Range Care and Maintenance 47
Manual Cleaning 47
Steam Clean 51
Troubleshooting 54
Before Calling for Service 54
Error Codes 59

RANGE SAFETY

Read All Instructions Before Using the Appliance

Your safety and the safety of others are very important.

We have provided many important safety messages in this manual and on your appliance. Always read and obey all safety messages.

This is the safety alert symbol.

This symbol alerts you to potential hazards that can kill or hurt you and others.

All safety messages will follow the safety alert symbol and either the word "WARNING" or "CAUTION." These words mean:

WARNING — You can be killed or seriously injured if you don't follow instructions.

CAUTION — A potentially hazardous situation which, if not avoided, could result in minor or moderate injury.

All safety messages will tell you what the potential hazard is, tell you how to reduce the chance of injury, and tell you what can happen if the instructions are not followed.

In the State of Massachusetts, the following installation instructions apply:

- Installations and repairs must be performed by a qualified or licensed contractor, plumber, or gasfitter qualified or licensed by the State of Massachusetts.
- If using a ball valve, it shall be a T-handle type.
- A flexible gas connector, when used, must not exceed 3 feet (91.5 cm).

California Proposition 65 Warning

⚠ **WARNING:** Cancer and Reproductive Harm - www.P65Warnings.ca.gov.

⚠ WARNING

Fire and Explosion Hazard

If the information in this manual is not followed exactly, a fire or explosion may result causing property damage, personal injuryor death.

- Installation and service must be performed by a qualified installer, service agency or the gas supplier.
- WHAT TO DO IF YOU SMELL GAS
  - Do not try to light any appliance.
  - Do not touch any electrical switch.
  - Do not use any phone in your building.
  - Clear the room, building, or area of all occupants.
  - Immediately call your gas supplier from a neighbor's phone. Follow the gas supplier's instructions.
- If you cannot reach your gas supplier, call the fire department.

⚠ WARNING

Never Operate the Top Surface Cooking Section of this Appliance Unattended.

- Failure to follow this warning statement could result in fire, explosion, or burn hazard that could cause property damage, personal injury, or death.
- If a fire should occur, keep away from the appliance and immediately call your fire department.

DO NOT ATTEMPT TO EXTINGUISH AN OIL/GREASE FIRE WITH WATER.

⚠ WARNING

- Gas leaks cannot always be detected by smell. Gas suppliers recommend that you use a gas detector approved by UL or CSA. For more information, contact your gas supplier.
- Do not install a ventilation system that blows air downward toward this cooking appliance. This type of ventilation system may cause ignition and combustion problems with this cooking appliance resulting in personal injury or unintended operation.
- This appliance is intended for normal residential use. It is not approved for commercial use, outdoor installation, or any other application not specifically allowed by this manual.
- This appliance requires connection to a 3-prong, 120VAC single-phase (split-phase), 60Hz grounded electrical source protected by a 20-Amp circuit breaker or slow blow fuse. When installed, appliance must be electrically grounded in accordance with local codes or, in the absence of local codes, with the National Electrical Code, NFPA 70 or the Canadian Electric Code, CSA C22.1-02.
- Proper installation is the responsibility of the installer. Any adjustment and service should be performed only by qualified range installers or service technicians. The manufacturer is not responsible for any injury or damage that may result from incorrect or defective installation by unauthorized personnel.
- Product failure due to improper installation is not covered under warranty.

ANTI-TIP DEVICE

⚠ WARNING

Tip Over Hazard

- A child or adult can tip the range and be killed.
- Install anti-tip bracket to floor or wall per installation instructions.
- Slide range back so rear range foot is engaged in the slot of the anti-tip bracket.
- Re-engage anti-tip bracket if range is moved.
- Do not operate range without anti-tip bracket installed and engaged.
- Failure to follow these instructions can result in death or serious burns to children and adults.

Making sure the anti-tip bracket is installed:

- Slide range forward.
- Look for the anti-tip bracket securely attached to floor or wall.
- Slide range back and make sure rear range foot is under anti-tip bracket.

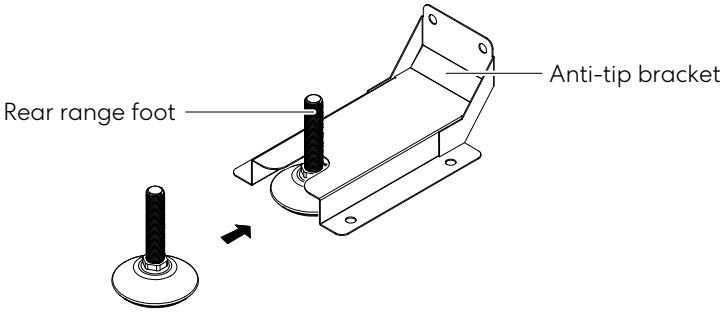

IMPORTANT SAFETY INSTRUCTIONS

WARNING: To reduce the risk of fire, electrical shock, injury to persons, or damage when using the range, follow basic precautions, including the following:

- **WARNING:** TO REDUCE THE RISK OF TIPPING OF THE RANGE, THE RANGE MUST BE SECURED BY PROPERLY INSTALLED ANTI-TIP DEVICES. TO CHECK IF THE DEVICES ARE INSTALLED PROPERLY, SLIDE RANGE COMPLETELY FORWARD, LOOK FOR ANTI-TIP BRACKET SECURELY ATTACHED TO THE FLOOR OR WALL, AND SLIDE RANGE BACK SO THE REAR RANGE FOOT IS UNDER ANTI-TIP BRACKET.
- **WARNING:** NEVER use this appliance as a space heater to heat or warm the room. Doing so may result in carbon monoxide poisoning and overheating of the oven.
- **WARNING:** NEVER cover any slots, holes or passages in the oven bottom or cover an entire rack with materials such as aluminum foil. Doing so blocks airflow through the oven and may cause carbon monoxide poisoning. Aluminum foil linings may also trap heat, causing a fire hazard.
- **CAUTION:** Do not store items of interest to children in cabinets above a range or on the back guard of the range – children climbing on the range to reach items could be seriously injured.
- Do Not Leave Children Alone – Children should not be left alone or unattended in the area where range is in use. They should never be allowed to sit or stand on any part of the range.
- Wear Proper Apparel – Loose-fitting or hanging garments should never be worn while using the range.
- Disconnect power before servicing.
- User Servicing – Do not repair or replace any part of the range unless specifically recommended in the manual. All other servicing should be referred to a qualified technician.
- Storage in or on Range – Flammable materials should not be stored in an oven or near surface units.
- This appliance is not intended for storage.
- Do Not Use Water on Grease Fires – Smother fire or flame or use dry chemical or foam-type extinguisher.

READ AND SAVE THESE INSTRUCTIONS

IMPORTANT SAFETY INSTRUCTIONS

- Use Only Dry Potholders – Moist or damp potholders on hot surfaces may result in burns from steam. Do not let potholder touch hot heating elements. Do not use a towel or other bulky cloth.
- Never Leave Surface Units Unattended at High Heat Settings – Boilover causes smoking and greasy spillovers that may ignite.
- Glazed Cooking Utensils – Only certain types of glass, glass/ceramic, ceramic, earthenware, or other glazed utensils are suitable for range - top service without breaking due to the sudden change in temperature.
- Utensil Handles Should Be Turned Inward and Not Extend Over Adjacent Surface Units – To reduce the risk of burns, ignition of flammable materials, and spillage due to unintentional contact with the utensil, the handle of a utensil should be positioned so that it is turned inward, and does not extend over adjacent surface units.
- Proper Installation – The appliance, when installed, must be electrically grounded in accordance with local codes, or in the absence of local codes, with the National Electrical Code, ANSI/NFPA 70 or the Canadian Electrical Code, CSA C22.1 -02. In Canada, the appliance must be electrically grounded in accordance with Canadian Electrical Code. Be sure your appliance is properly installed and grounded by a qualified technician.
- Injuries may result from misuse of the appliance doors or drawers such as stepping, leaning, or sitting on the doors or drawers.
- Maintenance – Keep range area clear and free from combustible materials, gasoline, and other flammable vapors and liquids.
- Do not let cooking grease or other flammable materials accumulate in or near the range. Grease in the oven or on the cooktop may ignite.
- Top burner flame size should be adjusted so it does not extend beyond the edge of the cooking utensil. This instruction is based on safety considerations.
- Do not use replacement parts that have not been recommended by the manufacturer (e.g. parts made at home using a 3D printer).
- Clean Cooktop With Caution – If a wet sponge or cloth is used to wipe spills on a hot cooking area, be careful to avoid steam burn. Some cleaners can produce noxious fumes if applied to a hot surface.
- Use Care When Opening Door – Let hot air or steam escape before removing or replacing food.

READ AND SAVE THESE INSTRUCTIONS

IMPORTANT SAFETY INSTRUCTIONS

- Do Not Heat Unopened Food Containers – Build-up of pressure may cause container to burst and result in injury.
- Keep Oven Vent Ducts Unobstructed.
- Never broil with door open. Open -door broiling is not permitted due to overheating of control knobs.
- Placement of Oven Racks – Always place oven racks in desired location while oven is cool. If rack must be moved while oven is hot, do not let potholder contact hot heating element in oven.
- Care must be taken to prevent aluminum foil and meat probes from contacting heating elements.
- DO NOT TOUCH HEATING ELEMENTS OR INTERIOR SURFACES OF OVEN – Heating elements may be hot even though they are dark in color. Interior surfaces of an oven become hot enough to cause burns. During and after use, do not touch, or let clothing or other flammable materials contact heating elements or interior surfaces of oven until they have had sufficient time to cool. Other surfaces of the appliance may become hot enough to cause burns – among these surfaces are cooktop, burners, grates, oven vent openings and surfaces near these openings, oven doors, windows of oven doors, and crevices around the oven doors.
- Top burner flame size should be adjusted so it does not extend beyond the edge of the cooking utensil.
- Have the installer show you the location of the range gas shut-off valve and how to turn it off if necessary.
- Proper Disposal of Your Appliance – Dispose of or recycle your appliance in accordance with Federal and Local Regulations. Contact your local authorities for the environmentally safe disposal or recycling of your appliance.
- Do Not Clean Door Gasket – The door gasket is essential for a good seal. Care should be taken not to rub, damage, or move the gasket.
- Do Not Use Oven Cleaners – No commercial oven cleaner or oven liner protective coating of any kind should be used in or around any part of the oven.
- Clean Only Parts Listed in Manual.

READ AND SAVE THESE INSTRUCTIONS

IMPORTANT SAFETY INSTRUCTIONS

For unit with ventilating hood

- Clean Ventilating Hoods Frequently – Grease should not be allowed to accumulate on hood or filter.
- When flaming foods under the vent hood, turn the fan on.

For self-cleaning ranges

- Before Self-Cleaning the Oven – Remove broiler pan and other utensils. Wipe off all excessive spillage before initiating the cleaning cycle.
- Wait for the oven to cool before removing contents and cleaning the oven.
- In the event of ignition inside the oven during self -clean, turn off the oven and wait for the fire to extinguish. DO NOT FORCE THE DOOR OPEN. Introduction of fresh air at Self-Clean temperatures may lead to a burst of flame from the oven.
- If the self-cleaning mode malfunctions, keep the door closed, turn off the appliance, disconnect the circuit at the circuit breaker box, and contact a qualified service provider for repairs.
- Some birds are extremely sensitive to the fumes produced during a self-clean cycle. Move birds to another well-ventilated room.

READ AND SAVE THESE INSTRUCTIONS

OVERVIEW

RANGE LAYOUT

The range you have purchased may have some or all of the items listed. The locations and appearances of the features shown here may not match those of your model.

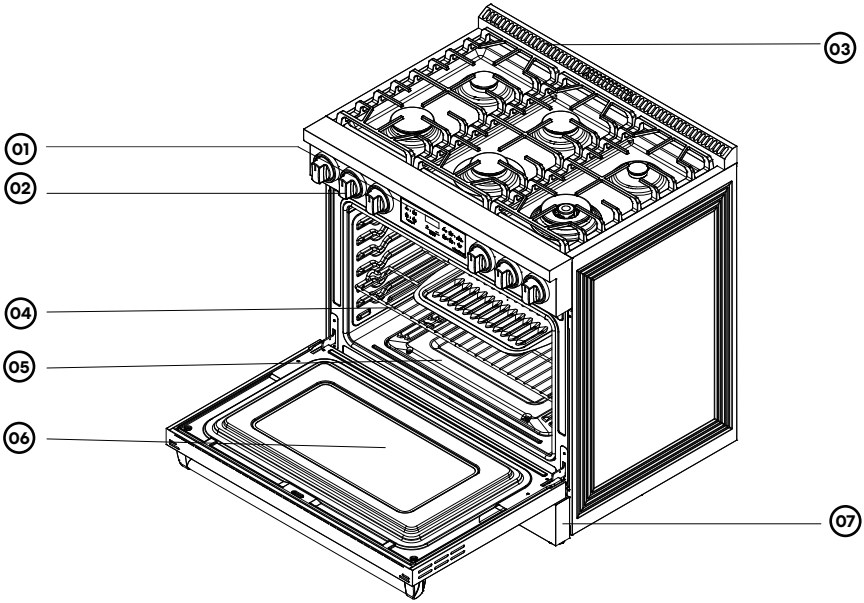

01. Control panel

02. Burner control knobs

03. Oven vent

04. Oven racks

05. Removable oven floor

06. Removable oven door

07. Removable storage drawer

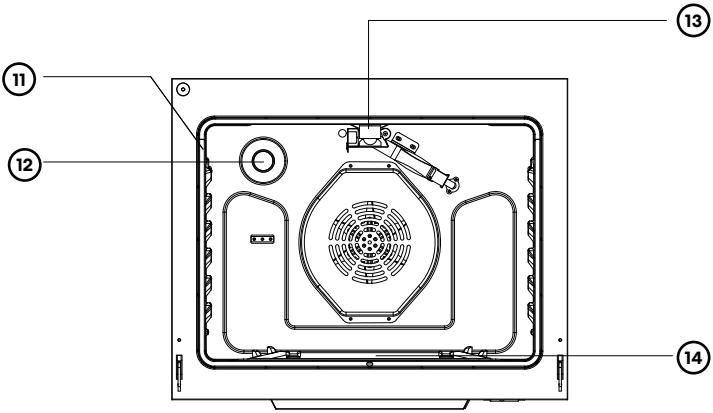

11. Oven position guide

12. Oven light

13. Broil oven burner

14. Bake oven burner

ACCESSORIES INCLUDED

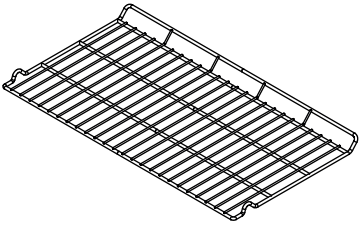

Oven racks (2)

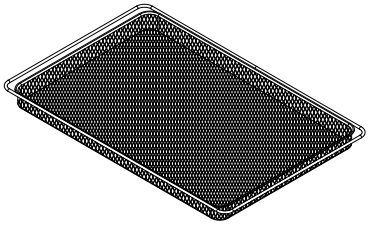

Air fry tray

Note:

- Reference the contact information at the end of this manual and contact customer service if any accessories are missing.
- The images in this guide may be different from the actual components and accessories, which are subject to change by the manufacturer without prior notice for product improvement purposes.

OPERATION

CONTROL PANEL

The appearance of the knobs may vary from what is shown below.

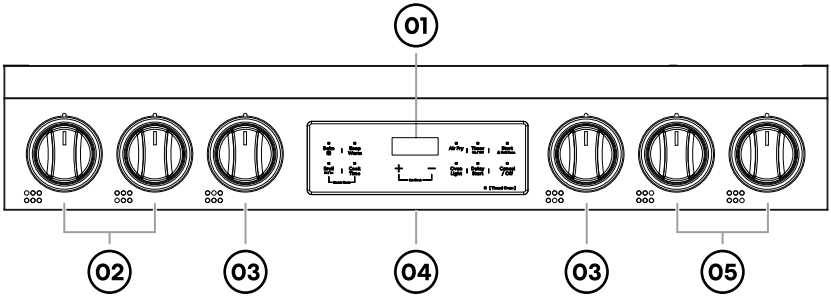

#	Name	Description
01	Display	To show the time and provide oven status.
02	Cooktop burner knobs	To turn the left burners on and off.
03	Cooktop burner knobs	To turn the middle burners on and off.
04	Oven/Timer controls	To turn the oven functions or timer on and off.
05	Cooktop burner knobs	To turn the right burners on and off.

OVEN CONTROLS

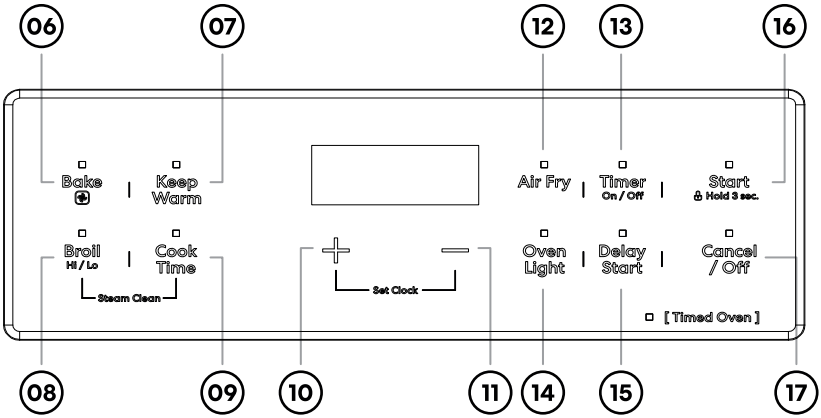

#	Name	Description
06	Bake	To select the Bake or Convection Bake function.
07	Keep Warm	To select the Keep Warm function.
08	Broil	To select the Hi Broil or Lo Broil function.
09	Cook Time	To set the length of the cook time.
10	+	To increase temperature and all times.
11	-	To decrease temperature and all times.
12	Air Fry	To select the Air Fry function.
13	Timer	To set or cancel the timer.
14	Oven Light	To turn the oven light on and off.
15	Delay Start	To set the length of the delay time.
16	Start	To start all functions of the oven.
17	Cancel/Off	To stop oven functions or cancel settings.

FEATURES

CLOCK

The digital clock displays the time of day when the oven is not in use. The control is set to use a 12-hour clock.

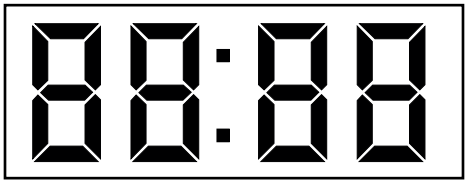

Setting the Clock

1. Press **+** and **-** at the same time.

   The current clock flashes in the display.

2. Press/hold **+** or **-** to adjust the clock.

3. Press **Start** to confirm and start the clock.

Changing the Hour Mode

1. Press and hold **+** and **-** at the same time for 3 seconds to toggle and select 12-hour or 24-hour clock.

   The display will show the selected hour mode 12H or 24H for 3 seconds.

TIMER

The timer serves as an extra timer in the kitchen that beeps when the set time has run out. It does not start or stop cooking. The timer feature can be used during any of the other oven control functions.

Setting the Timer (Up to 24 Hours)

1. Press **Timer On/Off** once.

   "0:00" appears and flashes in the display.

2. Press/hold **+** or **-** to set the length of time.

3. Press **Timer On/Off** to start the timer.

   The remaining time countdown appears in the display for a few seconds before the clock returns.

   Note:

   - Timer indicator light above **Timer On/Off** flashes, indicating a timer is counting down.
   - Pressing **Timer On/Off** will recall the remaining time in the display for a few seconds.
   - For remaining time less than a minute, the display shows MM:SS (minutes:seconds); for remaining time over a minute, the display shows HH:MM (hours:minutes).

4. When the set time runs out, "00:00" flashes in the display and the indicator tone sounds for about 20 seconds. Press **Cancel/Off** to cancel the tone early.

Changing the Timer

1. Press **Timer On/Off** once.

   The remaining time will flash in the display for a few seconds.

2. While the remaining time is flashing, press/hold **+** or **-** to set the new length of time.

3. Press **Timer On/Off** to start the timer.

Canceling the Timer

1. Press and hold **Timer On/Off** for 3 seconds or until the timer indicator light turns off.

> **Note:**
> - Pressing **Cancel/Off** will not cancel the current timer, but will cancel any oven cooking modes in progress.

OVEN LIGHT

The interior oven light automatically turns on and off when the door is opened and closed.

1. Press **Oven Light** to manually turn the oven light on or off.

OVEN CONTROL LOCK

The Oven Control Lock feature locks most of the oven controls. The Timer, Oven Light, Start, and Cancel/Off are the only usable pads when the lock is activated.

1. To activate the oven control lock, press and hold **Start** for 3 seconds.

2. To deactivate the oven control lock, press and hold **Start** for 3 seconds.

OVEN SETTINGS

The oven settings can be accessed while the oven is idle and the display is showing the time of day. The settings remain in the control's memory after a power failure or until changed.

Available oven settings:

- Adjusting the Oven Thermostat - calibrate the oven temperature
- Selecting Fahrenheit or Celsius - switch the temperature scale

Adjusting the Oven Thermostat

This oven may cook differently than the one it replaced. Use the oven for a few weeks to become more familiar with it before adjusting the thermostat settings.

Do not use thermometers, such as those found in grocery stores, to check the temperature setting of your oven. These thermometers may vary by 20°F – 40°F.

Note:

- The thermostat adjustment will affect Bake, Convection Bake, Broil (Hi/Lo), Keep Warm, and Air Fry. This adjustment will not affect Steam Clean.
- The adjustment will be retained in memory after a power failure.
- The oven temperature can be increased (+) or decreased (-) as much as 35°F (19°C).

1. Press and hold **Bake** and **Broil** at the same time for 3 seconds while the oven is idle.

2. Press/hold **+** or **-** to set the desired temperature adjustment.

   Examples:

   - 15 raises the oven temperature by 15 degrees
   - -15 lowers the oven temperature by 15 degrees

3. Press **Start** to accept the change.

Selecting Fahrenheit or Celsius

The oven is set to display the Fahrenheit temperature scale. Follow these instructions to set the display to either the Celsius or Fahrenheit scales.

1. Press and hold **Bake** for 3 seconds to toggle and select F (Fahrenheit) or C (Celsius).

   The display will show the selected temperature scale F or C for 3 seconds.

COOK TIME

Set the oven to cook for a specific length of time and turn off automatically at the end of the cooking time.

⚠ CAUTION

Food Poisoning Hazard

- Do not let food sit in oven more than one hour before or after cooking.
- Foods that can easily spoil such as milk, eggs, fish, meat or poultry, should be chilled in the refrigerator first. Even when chilled, they should not stand in the oven for more than 1 hour before cooking begins, and should be removed promptly when finished cooking. Consuming spoiled food can result in food poisoning or sickness.

Setting a Timed Cook

For example, to Bake at 375°F for 30 minutes.

1. Adjust oven rack levels as needed.
2. Press **Bake** to select Bake mode.
3. Press/hold **+** or **-** to set the bake temperature to **375°F**.
4. Press **Cook Time**.

Note:

- Cook Time can only be used with the Bake, Convection Bake, and Air Fry modes.

5. Press/hold **+** or **-** to set the cooking time to **0:30**.

6. Press **Start**.

   The oven starts to preheat and PRE appears in the display. Keep the oven door closed, and wait for the oven to preheat to the set temperature.

Note:

- The Timed Oven indicator lights up on the control panel, indicating an automatic oven is set.
- When the preheat has completed, the set temperature appears in the display and the indicator tone sounds for a few seconds. The cooking time countdown starts.

7. Place the food in the oven.

   The oven will continue to cook for the set amount of time and then turn off automatically.

8. When the cooking time has elapsed, END shows in the display. The cook end indicator tone sounds until **Cancel/Off** or any pad is pressed. Remove the food from the oven.

Changing the Cook Time during Cooking

For example, to change the cook time to 1 hour during cooking.

1. Press **Cook Time**.

2. Press/hold **+** or **-** to change the cooking time to **1:00**.

3. Press **Start** to accept the change.

Changing the Temperature during Cooking

For example, to change the bake temperature to 300°F.

1. Press **Bake**.
2. Press/hold **+** or **-** to change the bake temperature to **300°F**.
3. Press **Start** to accept the change.

DELAY START

Set the oven to turn on automatically after a specific length of time. With both Delay Start and Cook Time set, the oven automatically turns on after a specific length of time and turns off after a selected length of cooking time.

⚠ CAUTION

Food Poisoning Hazard

- Do not let food sit in oven more than one hour before or after cooking.
- Foods that can easily spoil such as milk, eggs, fish, meat or poultry, should be chilled in the refrigerator first. Even when chilled, they should not stand in the oven for more than 1 hour before cooking begins, and should be removed promptly when finished cooking. Consuming spoiled food can result in food poisoning or sickness.

Setting a Delayed Timed Cook

For example, to Bake at 375°F for 30 minutes and delay the start of baking by 45 minutes.

1. Adjust oven rack levels as needed.
2. Press **Bake** to select Bake mode.

3. Press/hold **+** or **-** to set the bake temperature to **375°F**.

4. Press **Cook Time**.

> **Note:**
> - Cook Time can only be used with the Bake, Convection Bake, and Air Fry modes.

5. Press/hold **+** or **-** to set the cooking time to **0:30**.

6. Press **Delay Start**.

7. Press/hold **+** or **-** to set the delaying time to **0:45**.

8. Press **Start** to confirm.

> **Note:**
> - The Timed Oven indicator lights up on the control panel, indicating an automatic oven is set.
> - When the delaying time has elapsed, the oven automatically turns on and starts to preheat. After preheating, the oven will continue to cook for the set amount of time and then turn off automatically.

9. When the cooking time has elapsed, END shows in the display. The cook end indicator tone sounds until **Cancel/Off** or any pad is pressed. Remove the food from the oven.

GAS SURFACE BURNERS

BEFORE USING THE GAS SURFACE BURNERS

Read all instructions before using.

⚠ WARNING

- Make sure all burners are in their correct locations and fully assembled before attempting to operate any burner.
- Never leave the surface burners on unattended. Boilovers may cause smoke and greasy spillovers that may ignite.
- Do not use aluminum foil to line or cover the cooktop, grates, or any other part of the cooktop. Doing so may result in carbon monoxide poisoning, overheating of the cooktop surfaces, or fire.
- Use the proper pan size. Do not use pans that are unstable or that can be easily tipped. Select cookware with flat bottoms large enough to cover burner grates.
- To avoid spillovers, make sure the cookware is large enough to contain the food properly. This will both save cleaning time and prevent hazardous accumulations of food, since heavy spattering or spillovers left on the range can ignite.

⚠ CAUTION

- Control the top burner flame size so it does not extend beyond the edge of the cookware. Excessive flame is hazardous.
- Do not operate the burner for an extended period of time without cookware on the grate. The finish on the grate may discolor or chip without cookware to absorb the heat.
- Do not attempt to disassemble any burner while another burner is on. Damage to the product may occur.
- Be sure the burners and grates are cool before you place your hand, a pot holder or cleaning materials on them.

IMPORTANT:

- The use of a gas-cooking appliance results in the production of heat and moisture in the room in which it is installed. Ensure that the kitchen is well ventilated: keep natural ventilation holes open or install a mechanical ventilation device (mechanical extractor hood).
- Prolonged intensive use of the appliance may call for additional ventilation, for example opening of a window, or more effective ventilation, for example increasing the level of mechanical ventilation where present.

USING THE GAS SURFACE BURNERS

Lighting a Surface Burner

1. Select a burner and find its control knob.

2. Push the control knob in and turn it to the Ignite position. The electric spark ignition system will make a clicking noise.

> **Note:**
> - When one burner is turned to Ignite, other burners will spark. Sparking will continue as long as the knob remains at Ignite.
> - Do not touch any surface burner components (e.g. burner cap, burner base, igniter) while the igniters are sparking.

3. Once gas is ignited, turn the control knob to adjust the flame size.

4. To turn off a burner, turn the control knob to the OFF position.

OFF position

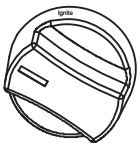

Ignite position

Max. position

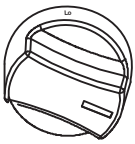

Min. position

Selecting a Flame Size

Watch the flame, not the control knob, as you reduce heat. Match the flame size on a gas burner to the cookware being used for fastest heating.

Note:

- Never let the flames extend up the sides of the cookware. Flames larger than the bottom of the cookware will not heat faster and may be hazardous.

In Case of Power Failure

In case of a power failure, you can light the gas surface burners on your range with a match. Surface burners in use when an electrical power failure occurs will continue to operate normally.

1. Using extreme caution, hold a lit match to the burner.
2. Push in the control knob, then turn the control knob to the Min. position.
3. Once gas is ignited, turn the control knob to adjust the flame size.

USING THE PROPER COOKWARE

Aluminum

Medium-weight cookware is recommended because it heats quickly and evenly. Most foods brown evenly in an aluminum skillet. Use saucepans with tight fitting lids when cooking with minimum amounts of water.

Cast-Iron

If heated slowly, most skillets will give satisfactory results.

Stainless Steel

This metal alone has poor heating properties and is usually combined with copper, aluminum or other metals for improved heat distribution. Combination metal skillets work satisfactorily if they are used with medium heat as the manufacturer recommends.

Enamelware

Under some conditions, the enamel of this cookware may melt. Follow cookware manufacturer's recommendations for cooking methods.

Glass

There are two types of glass cookware. Those for oven use only and those for top-of-range cooking.

Heatproof Glass Ceramic

Can be used for either surface or oven cooking. It conducts heat very slowly and cools very slowly. Check cookware manufacturer's directions to be sure it can be used on gas ranges.

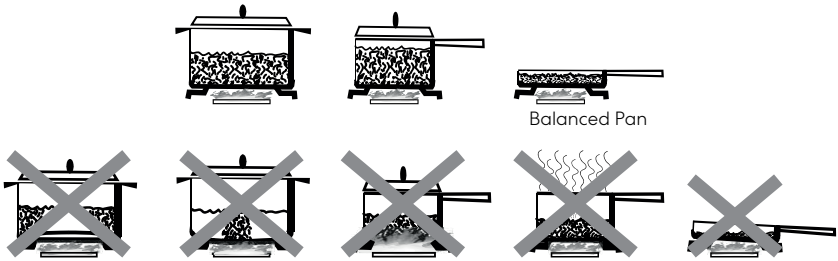

Note:

- Never let the flames extend up the sides of the cookware. Flames larger than the bottom of the cookware will not heat faster and may be hazardous.
- The flame should not extend beyond the bottom edge of the cookware. Oversized cookware that spans two burners should be placed front to rear, not side to side.
- Use balanced cookware that sits level on the cooktop grate without rocking. Center the cookware over the burner.
- Use a lid that fits properly. A well -fitting lid helps shorten the cooking time.
- Match the size of the cookware to the amount of food being cooked to save energy when heating.
- Do not use stove top grills on the surface burners. Using a stove top grill on the surface burner will cause incomplete combustion and can result in exposure to carbon monoxide levels above allowable current standards. This can be a health hazard.
- If using a wok, use only a flat-bottomed wok with diameter of 14 inches or less. Make sure that the wok bottom sits flat on the grate.
- Do not use a wok support ring. Placing the ring over the burner or grate may cause the burner to work improperly, resulting in carbon monoxide levels above allowable standards. This can be hazardous to your health.

OVEN

BEFORE USING THE OVEN

Read the instructions for each feature and cooking mode in this manual carefully before using the oven.

⚠ CAUTION

- Do not use any type of foil or oven liner to cover the oven bottom. These items can trap heat or melt, resulting in damage to the product and risk of shock, smoke or fire. Damage from improper use of these items is not covered by the product warranty.
- Foil may be used to catch spills by placing a sheet on a lower rack, several inches below the food. Do not use more foil than necessary and never entirely cover an oven rack with aluminum foil. Keep foil at least 1-1/2" (3.8 cm) from oven walls to prevent poor heat circulation.
- Do not cover the slotted grid of the 2-piece broiler pan with aluminum foil. This will catch the grease and could cause fire.
- Do not use plastic wrap or wax paper in the oven.
- Do not place food, water, ice, or any dish or tray directly on the oven floor, as this will irreversibly damage the enamel surface.
- Do not block, touch or place items around the oven vent during cooking. Your oven is vented through ducts at the center above the burner grate. Do not block the oven vent when cooking to allow for proper air flow.
- In case of power failure, do not use the oven. The oven and broiler cannot be used during a power outage. Do not attempt to operate the electric ignition during an electrical power failure. If the oven is in use when a power failure occurs, the oven burner shuts off and cannot be re-lit until power is restored. Once power is restored, you will need to reset the oven cooking mode.
- As the oven heats up, the heated air in the oven may cause condensation to appear on the oven door glass. These water drops are harmless and will evaporate as the oven continues to heat up.
- An air curtain or other overhead range hood, which operates by blowing a downward airflow onto a range shall not be used in conjunction with a gas range.

⚠ CAUTION

Food Poisoning Hazard

- Do not let food sit in oven more than one hour before or after cooking.
- Foods that can easily spoil such as milk, eggs, fish, meat or poultry, should be chilled in the refrigerator first. Even when chilled, they should not stand in the oven for more than 1 hour before cooking begins, and should be removed promptly when finished cooking. Consuming spoiled food can result in food poisoning or sickness.

BEFORE USING THE OVEN FOR THE FIRST TIME

Start the oven in Bake mode at the highest available temperature setting. Allow oven to run for 1 hour to remove any dust or impurities. There will be a distinctive odor - this is normal. Ensure your kitchen is well ventilated during this conditioning period.

OVEN VENT

Areas near the vent may become hot during operation and may cause burns. Avoid placing plastics near the vent as heat may distort or melt the plastic.

Do not block the vents (air openings) of the range. They provide the air inlet and outlet that are necessary for the range to keep cool and operate properly with correct combustion.

It is normal for steam to be visible when cooking foods with high moisture content.

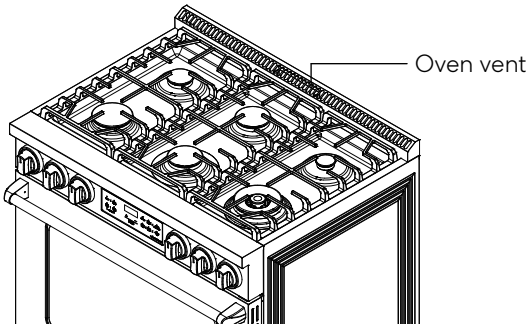

OVEN DOOR

Oven heating elements and, if in operation, convection fan will temporarily shut off any time door is opened, and will resume when door is closed within 3 minutes.

Note:

- Do not leave the door open any longer than necessary. If the door is left open too long for over 3 minutes, the cooking mode will be automatically cancelled.

To avoid oven door glass breakage:

- Do not close the oven door if the racks are not fully inserted into the oven cavity or if bakeware extends past the front edge of an oven rack.
- Do not set objects on the glass surface of the oven door.
- Do not hit glass surfaces with bakeware or other objects.
- Do not wipe down glass surfaces until the oven has completely cooled.

USING OVEN RACKS

The racks have a turned-up back edge that prevents them from being pulled out of the oven cavity.

⚠ CAUTION

- Replace oven racks before turning the oven on to prevent burns.
- Do not cover the racks with aluminum foil, or any other material, or place anything on the bottom of the oven. Doing so will result in poor baking and may damage the oven bottom.
- Only arrange oven racks when the oven is cool.

Removing Racks

1. Pull the rack straight out until it stops.

2. Lift up the front of the rack and pull it out.

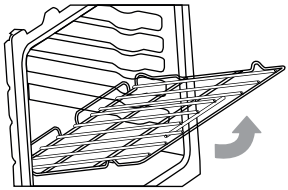

Replacing Racks

1. Place the end of the rack on the support.

2. Tilt the front end up and push the rack in.

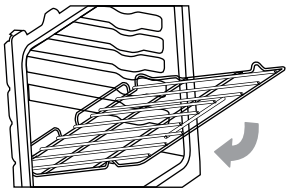

Rack Positions

For best cooking results, adjust rack so food is placed at the center of the oven. For most foods this will be rack position #3 or #4. For larger foods like roasts and turkey, move the rack position down to #2 or #1 to keep the food centered in the oven.

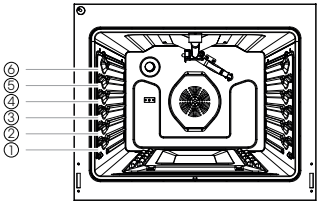

When using multiple racks simultaneously, try to space the food out around the oven center (rack positions #3 and #5 or #2 and #4 for two racks).

Broiling performs best with the food close to the broil heating element - typically rack position #5 or #6.

PREHEATING

Preheating is generally desirable, although not absolutely necessary in all circumstances.

- For oven modes that utilize preheat, the control will automatically enter preheat mode and show "PRE" after Start is pressed to turn on the oven.
  - Once the set temperature is reached, an indicator tone will sound for a few seconds to alert the user that preheat is complete.
- Broil and Warm modes do not utilize preheat, the control will show Hi or Lo for Broil and 175°F (79°C) for Warm after Start is pressed to turn on the oven.

Note:

- It is normal for the convection fan to operate during preheating of various baking modes.

Some foods are more robust and may have acceptable results without preheating. These foods include large pieces of meat (whole roasts, hams, or poultry) where the total cooking time is much longer than the time required to preheat. These foods also include frozen potato products and frozen processed dinners that, by their nature and design, are more robust to baking variations. More delicate foods, such breads (including cakes, cookies, pastries, and pizzas), desserts, soufflés, etc. will likely not have acceptable results without proper preheating.

MINIMUM & MAXIMUM DEFAULT SETTINGS

The various baking modes (Bake, Conv Bake, and Air Fry) have a 10-hour time limit, after which the control will automatically end the baking mode. Broil and Keep Warm modes have a 3-hour time limit. If desired, these modes can be restarted after the time limit expires.

Cooking Mode	Temperature			Maximum Cook Time (hh:mm)
	Minimum	Maximum	Default/Target	
Bake	175°F (79°C)	550°F (287°C)	350°F (176°C)	10:00
Conv Bake	175°F (79°C)	550°F (287°C)	350°F (176°C)	10:00
Air Fry	350°F (177°C)	550°F (287°C)	425°F (217°C)	10:00
Broil	-	-	Hi: 550°F (288°C) Lo: 400°F (204°C)	03:00
Keep Warm	-	-	175°F (79°C)	03:00
Steam Clean	-	-	150°F (65°C)	00:25

Note:

- Once the oven reaches the default or set temperature, the oven pauses heating temporarily. The oven heating cycle will automatically resume to maintain the set temperature.
- Because the oven temperature cycles, an oven thermometer placed in the oven cavity may not show the same set temperature on the oven.

BAKE

The Bake mode uses heat from the lower heating element to cook food. This mode works best with food placed on a single rack. Always preheat the oven first and place food centrally near the middle racks.

Setting the Bake Mode

For example, to Bake at 375°F.

1. Adjust oven rack levels as needed.

2. Press **Bake** once to select Bake mode.

3. Press/hold **+** or **-** to set the bake temperature to **375°F**.

4. Press **Start**.

   --:-- appears in the display, prompting for cooking time to be entered.

5. (Optional) Press/hold **+** or **-** to set the desired cooking time.

6. Press **Start**.

   The oven starts to preheat, and PRE appears in the display. Keep the oven door closed, and wait for the oven to preheat to the set temperature.

   Note:

   - If the oven door is opened at the time **Start** is pressed, the oven will turn on when the oven door is closed.
   - When the preheat has completed, the set temperature appears in the display and the indicator tone sounds for a few seconds. If a cooking time is set, the countdown will start.

7. Place the food in the oven.

Note:

- Do not leave the door open any longer than necessary when placing food. If the door is left open too long for over 3 minutes, the cooking mode will be automatically cancelled.

8. Press **Cancel/Off** when cooking is finished, and remove the food from the oven.

Note:

- Baking time and temperature will vary depending on the characteristics, size, and shape of the baking pan used.
- Check for food doneness at the minimum recipe time.
- Use metal bakeware (with or without a nonstick finish), heatproof glass - ceramic, ceramic or other bakeware recommended for oven use.
- Dark metal pans or nonstick coatings will cook food faster with more browning. Insulated bakeware will slightly lengthen the cooking time for most foods.

CONVECTION BAKE

The Convection Bake mode uses heat from the lower heating element and air movement from the convection fan to enhance cooking efficiency and evenness across multiple racks. Always preheat the oven first. Baking times may be slightly longer for multiple racks than what would be expected for a single rack.

Setting the Convection Bake Mode

For example, to Convection Bake at 375°F.

1. Adjust oven rack levels as needed.

2. Press **Bake** twice to select Convection Bake mode.

   The indicator light above Bake flashes.

3. Press/hold **+** or **-** to set the bake temperature to **375°F**.

4. Press **Start**.

--:-- appears in the display, prompting for cooking time to be entered.

5. (Optional) Press/hold **+** or **-** to set the desired cooking time.

6. Press **Start**.

The oven starts to preheat, and PRE appears in the display. Keep the oven door closed, and wait for the oven to preheat to the set temperature.

Note:

- If the oven door is opened at the time **Start** is pressed, the oven will turn on when the oven door is closed.
- When the preheat has completed, the set temperature appears in the display and the indicator tone sounds for a few seconds. If a cooking time is set, the countdown will start.

7. Place the food in the oven.

Note:

- Do not leave the door open any longer than necessary when placing food. If the door is left open too long for over 3 minutes, the cooking mode will be automatically cancelled.

8. Press **Cancel/Off** when cooking is finished, and remove the food from the oven.

Note:

- The oven fan runs while convection baking.
- Use Convection Bake for faster and more even multiple-rack cooking of pastries, cookies, muffins, biscuits, and breads of all kinds.
- Place the oven racks in positions suggested in the "Tips and Techniques" section.
- Bake cookies and biscuits on pans with no sides or very low sides to allow heated air to circulate around the food. Food baked on pans with a dark finish will cook faster.

AIR FRY

The Air Fry mode uses heat from the upper and lower heating elements and hot air movement from the convection fan to circulate hot air inside the oven. This mode is specially designed for oil -free frying, and to produce foods with a crispier exterior than traditional oven cooking. The Air Fry mode is intended for single rack cooking only. Always preheat the oven first and place food centrally near the middle racks.

Setting the Air Fry Mode

For example, to Air Fry at 400°F.

1. Adjust oven rack levels as needed.

2. Press **Air Fry** to select Air Fry mode.

3. Press/hold **+** or **-** to set the air fry temperature to **400°F**.

4. Press **Start**.

   --:-- appears in the display, prompting for cooking time to be entered.

5. (Optional) Press/hold **+** or **-** to set the desired cooking time.

6. Press **Start**.

   The oven starts to preheat, and PRE appears in the display. Keep the oven door closed, and wait for the oven to preheat to the set temperature.

> **Note:**
> - If the oven door is opened at the time **Start** is pressed, the oven will turn on when the oven door is closed.
> - When the preheat has completed, the set temperature appears in the display and the indicator tone sounds for a few seconds. If a cooking time is set, the countdown will start.

7. Place the food in the oven.

> **Note:**
> - Do not leave the door open any longer than necessary when placing food. If the door is left open too long (over 3 minutes), the cooking mode will be automatically cancelled.

8. Press **Cancel/Off** when cooking is finished, and remove the food from the oven.

> **Note:**
> - The oven fan runs while air frying .
> - Use the air fry tray provided or pans with low sides or no sides for better air flow over foods.

BROIL

The Broil mode uses intense heat from the upper heating element to sear foods. This mode works best for tender cuts of meat, fish, and thinly cut vegetables, and is ideal for toasting, melting cheese, browning and searing the surface. Food should be placed near the upper racks, and should not be cooked for too long on each side of the food.

Setting the Broil Mode

1. Adjust oven rack levels as needed.

2. Press **Broil** once to select Hi Broil or twice to select Lo Broil.

3. Press **Start**.

   The oven starts to preheat, and HI or LO remains in the display. Keep the oven door closed.

   Note:
   - If the oven door is opened at the time **Start** is pressed, the oven will turn on when the oven door is closed.

4. Place the food in the oven after preheating for 5 - 10 minutes.

   Note:
   - Do not leave the door open any longer than necessary when placing food. If the door is left open too long (over 3 minutes), the cooking mode will be automatically cancelled.

5. Press **Cancel/Off** when cooking is finished, and remove the food from the oven.

Note:
- The oven of this range is designed for closed-door broiling. Opening the door turns off the broil heating element during broiling. If the door is not closed, the Broil mode will ultimately cancel itself.
- The broil heating element is very powerful. Follow recipe directions and monitor food closely to reduce risk of burning food.
- Always use a broiler pan and grid for excess fat and grease drainage. This will help to reduce splatter, smoke, and flare-ups. Do not use a broiler pan without a grid. Oil can cause a grease fire.
- Do not cover the grid and broiler pan with aluminum foil. Doing so will cause a fire.

KEEP WARM

The Keep Warm mode uses heat from the lower heating element to maintain oven temperature at around 175°F (79°C). It will keep cooked food warm for serving up to 3 hours after cooking has finished. Cover foods that need to remain moist and do not cover foods that should be crisp. Preheating is not required.

Setting the Keep Warm Mode

1. Adjust oven rack levels as needed.

2. Place the hot food in the oven.

3. Press **Keep Warm** to select Keep Warm mode.

4. Press **Start**.

   The oven starts to preheat, and 175°F (79°C) remains in the display. Keep the oven door closed.

   Note:
   - If the oven door is opened when **Start** is pressed, the oven will turn on when the oven door is closed.

5. Press **Cancel/Off** when warming is finished, and remove the food from the oven.

Note:
- Do not use Warm mode to heat cold food. Always start with hot food.
- It is recommended that food not be kept warm for more than 2 hours.
- The warm mode is intended to keep food warm. Do not use it to cool food down.
- Avoid opening the oven door more than necessary during use. If the door is left open too long (over 3 minutes), the cooking mode will be automatically cancelled.

TIPS AND TECHNIQUES

Bake

Baking is cooking with heated air. The lower element in the oven is used to heat the air but no fan is used to circulate the heat.

Follow the recipe or convenience food directions for baking temperature, time and rack position. Baking time will vary with the temperature of ingredients and the size, shape and finish of the baking utensil.

- For best results, bake food on a single rack with at least 1" - 1½" (2.5 - 3 cm) space between utensils and oven walls.
- Use one rack when selecting the bake mode.
- Check for doneness at the minimum time.
- Use metal bakeware (with or without a nonstick finish), heatproof glass, glass ceramic, pottery or other utensils suitable for the oven.
- When using heatproof glass, reduce temperature by 25°F (15°C) from recommended temperature.
- Use baking sheets with or without sides or jelly roll pans.
- Dark metal pans or nonstick coatings will cook faster with more browning. Insulated bakeware will slightly lengthen the cooking time for most foods.
- Do not use aluminum foil or disposable aluminum trays to line any part of the oven. Foil is an excellent heat insulator and heat will be trapped beneath it. This will alter the cooking performance and can damage the finish of the oven.
- Avoid using the opened door as a shelf to place pans.
- See Troubleshooting for tips on solving Oven Problems.

Convection Bake

Convection Bake uses heat from the lower heating elem ent and air movement from the convection fan to enhance cooking efficiency and evenness across multiple racks. Reduce recipe baking temperatures by 25°F (15°C).

- For best results, foods should be cooked uncovered, in low-sided pans to take advantage of the forced air circulation. Use shiny aluminum pans for best results unless otherwise specified.
- Heatproof glass or ceramic can be used. Reduce temperature by another 25°F (15°C) when using heatproof glass dishes for a total reduction of 50°F (30°C).
- Dark metal pans may be used. Note that food may brown faster when using dark metal bake ware.
- The number of racks used is determined by the height of the food to be cooked.
- Baked items, for the most part, cook extremely well in convection. Don't try to convert recipes such as custards, quiches, pumpkin pie, or cheesecakes, which do not benefit from the convection-heating process. Use the regular Bake mode for these foods.
- Multiple rack cooking for oven meals is done on rack positions 1, 2, 3, 4, 5, and 6. All six racks can be used for cookies, biscuits and appetizers.
  - 2 Rack baking: Use positions 3 and 5 or 2 and 4.
  - 3 rack baking: Use positions 2, 3, and 4 or 1, 3, and 5 or 2, 4, and 6.
  - When baking four cake layers at the same time, stagger pans so that one pan is not directly above another. For best results, place cakes on front of upper rack and back of lower rack (See graphic at right). Allow 1" - 1 ½" (2 .5 - 3cm) air space around pans.

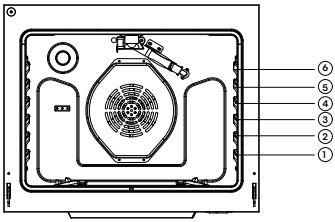

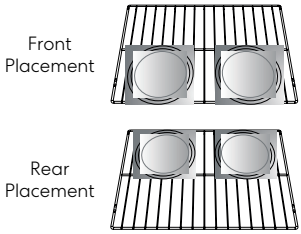

- Converting your own recipe can be easy. Choose a recipe that will work well in convection.
- Reduce the temperature and cooking time if necessary. It may take some trial and error to achieve a perfect result. Keep track of your technique for the next time you want to prepare the recipe using convection.
- See Troubleshooting for tips to Solving Baking and Roasting Problems.

Foods recommended for convection bake mode:

Appetizers, Biscuits, Cakes, Casseroles, Coffee Beans, Cookies (2 to 4 racks), Cream Puffs, Popovers, Yeast Breads, One -Dish Entrées, Oven Meals (rack positions 3 and 4), and Air Leavened Foods (Soufflés, Meringue, Meringue - Topped Desserts, Angel Food Cakes, Chiffon Cakes).

Air Fry

The Air Fry mode uses heat from the upper and lower heating elements and air movement from the fans to circulate hot air inside the oven and to produce foods with a crispier exterior than traditional oven cooking.

- For best results , use the provided air fry tray and position oven rack so that food is placed centrally near the middle racks.
- If you don't have the air fry tray, place food on a wire rack inside a foil - lined broiler pan or on a dark baking pan with low sides or no sides for better air flow over foods.
- Spread the food out evenly in a single layer. Check food often and shake it or turn it over for crisper results.
- If desired, spray the baking tray or air fry tray with a pan spray. Use an oil that can be heated to a high temperature before smoking, such as avocado, grapeseed, peanut or sunflower oil.
- Place a foil-lined baking tray on the bottom rack to catch the oil falling from the food. For high fat foods like chicken wings, add a few sheets of parchment paper to absorb the fat.
- Foods high in fat will smoke when using the Air Fry mode. Turn on your exhaust hood at a high fan setting or open a window to make sure the kitchen is well-ventilated.
- Prepared frozen foods may cook faster with the Air Fry mode than stated on the package. Reduce the cooking time by about 20 percent, check food early, and adjust cooking time as needed.

Broil

The Broil mode uses intense heat from the upper heating element to sear foods. The size, weight, thickness, starting temperature, and your preference of doneness will affect broiling times.

- For best results when broiling, use a pan designed for broiling.
- Preheat the oven for about 5 minutes before placing food in the oven.

RANGE CARE AND MAINTENANCE

MANUAL CLEANING

IMPORTANT: Before cleaning, make sure all controls are off and the oven and cooktop are cool. Always follow label instructions on cleaning products. Soap, water and a soft cloth or sponge are suggested first unless otherwise noted. Do not use abrasive cleaning produ cts.

Note:

- Do not clean the oven door gasket. The material of the gasket cannot withstand abrasion. It is essential for the gasket to remain intact. If you notice it becoming worn or frayed, replace it.
- Re-engage the anti-tip bracket if range is moved.

EXTERIOR PORCELAIN ENAMEL SURFACES

- Food spills containing acids, such as vinegar and tomato, should be cleaned as soon as the entire appliance is cool. These spills may affect the finish.

Cleaning Method:

- Glass cleaner, mild liquid cleaner or nonabrasive scrubbing pad: Gently clean around the model and serial number plate because scrubbing may remove numbers.

OVEN DOOR EXTERIOR

Cleaning Method:

- Glass cleaner and paper towels or nonabrasive plastic scrubbing pad: Apply glass cleaner to soft cloth or sponge, not directly on panel.

EXTERIOR STAINLESS STEEL

- Rub in direction of grain to avoid damaging.

Cleaning Methods:

- Liquid detergent or all-purpose cleaner: Rinse well with clean water and dry with soft, lint-free cloth.
- Stainless Steel Cleaner and Polish. Vinegar for hard water spots.

Note:

- Do not use soap-filled scouring pads, abrasive cleaners, cooktop polishing cream, steel-wool pads, gritty washcloths or some paper towels. Damage may occur, even with one-time or limited use.

PORCELAIN-COATED GRATES AND CAPS

- Clean as soon as cooktop, grates and caps are cool.
- Food spills containing acids, such as vinegar and tomato, should be cleaned as soon as the cooktop grates and caps are cool. These spills may affect the finish.
- To avoid chipping, do not bang grates and caps against each other or hard surfaces such as cast iron cookware.
- Do not reassemble caps on burners while wet.

Cleaning Method:

- Nonabrasive plastic scrubbing pad and mildly abrasive cleanser.

BURNER BASE/SPREADER

Cleaning Method:

- Wash the burner base/spreader frequently with boiling water and detergent to remove any deposits which could block the flame outlet.
- Before reinstalling, dry the burner base/spreader thoroughly so the burner will ignite properly.

COOKTOP CONTROL KNOBS

- Pull knobs straight away from control panel to remove.
- When replacing knobs, make sure knobs are in the OFF position.

Cleaning Method:

- Soap and water or dishwasher.

> **Note:**
> - Do not use steel wool, abrasive cleansers or oven cleaner. Do not soak knobs.

CONTROL PANEL

Cleaning Method:

- Glass cleaner and soft cloth or sponge: Apply glass cleaner to soft cloth or sponge, not directly on panel.

> **Note:**
> - Do not use abrasive cleaners, steel-wool pads, gritty washcloths or some paper towels. Damage may occur.

OVEN CAVITY

- Food spills should be cleaned when oven cools. At high temperatures, foods react with porcelain, so staining, etching, pitting or faint white spots can result.

Cleaning Method:

- Mild detergent and warm water.

> **Note:**
> - Do not use oven cleaners.

OVEN RACKS AND ROASTING RACKS

Cleaning Method:

- Steel-wool pad

BAKING TRAY OR BROILER PAN

Cleaning Method:

- Mildly abrasive cleanser: Scrub with wet scouring pad.
- Solution of ½ cup (125 mL) ammonia to 1 gal. (3.75 L) water: Soak for 20 minutes, and then scrub with scouring or steel -wool pad.
- Oven cleaner: Follow product label instructions.

Porcelain enamel only, not chrome

- Dishwasher

STORAGE DRAWER

- Fully open the drawer and empty the drawer before cleaning.

Cleaning Method:

- Clean with warm water, and use a damp cloth or sponge.

Note:

- Do not use scrub pads or abrasive cleaning pads.
- Most cleaning can be done with the drawer in place; however, the drawer may be removed if further cleaning is needed. See "Removing/Assembling Storage Drawer" section in the Installation Instructions manual.

STEAM CLEAN

The Steam Clean feature is designed to use water and a low oven temperature to generate steam to warm the oven interior surfaces and loosen light soils before hand cleaning.

⚠ CAUTION

Burn Hazard

- Do not leave small children unattended near the appliance during the cleaning cycle. The outside of the range can become hot to the touch.
- During the cleaning cycle, the oven becomes hot enough to cause burns. Wait until the cycle is over before wiping the inside surface of the oven. Failure to do so may result in burns.
- Oven surfaces may be hot after the cleaning cycle. Use caution and wear rubber gloves while cleaning to prevent burns.
- Hot surfaces may create hot steam in wet sponge or cloth while cleaning. If steam is evident when wiping out oven, wait until oven has cooled slightly.

BEFORE STARTING STEAM CLEAN

- Allow the oven to cool to room temperature before starting. If your oven cavity is above 150°F (65°C), HOT will appear in the display when you attempt to select Steam Clean mode.
- Remove all items from the oven, including oven racks.
- Wipe any heavy spillovers or excess debris. Scrape off and remove any burnt-on debris with a plastic scraper. (Suggested plastic scrapers include hard plastic spatula, plastic pan scraper, plastic paint scraper, and old credit card.)
- The range should be level to ensure that the bottom surface of the oven cavity is entirely covered by water at the beginning of Steam Clean.
- For best results, use distilled or filtered water. Tap water may leave mineral deposits on the surfaces.
- For improved softening of tough stains, spray inside surfaces with water spray bottle or wipe surfaces with a wet sponge before starting.

SETTING STEAM CLEAN

Start with oven at room temperature.

1. Remove oven racks and accessories from the oven.

2. Scrape off and remove any burnt-on debris with a plastic scraper.

3. Pour 10 oz or 300 ml of water onto the bottom center of the oven cavity. The indentation on the oven bottom should be fully covered to submerge all soils.

> **Note:**
> - For improved softening of tough stains on the walls and in the corners of the oven, wipe inside surfaces with a wet sponge.

4. Close the oven door.

5. Press and hold **Broil** and **Cook Time** at the same time to select Steam Clean mode.

> **Note:**
> - If your oven cavity is above 150°F (65°C), HOT will appear in the display and prevent Steam Clean mode from being selected.

6. Press **Start**.

   The Steam Clean cycle will run for 25 minutes by default. Keep the oven door closed.

> **Note:**
> - If the oven door is opened at the time **Start** is pressed, the oven will turn on when the oven door is closed.
> - Press **Cancel/Off** to cancel Steam Clean at any time.

7. After the Steam Clean cycle, soak up any remaining water and clean the oven cavity immediately by scrubbing with a soft, damp, non-abrasive sponge or cloth. Place a towel on the floor in front of the oven to capture any water that may spill out during hand-cleaning.

Note:

- Place a towel on the floor in front of the oven to capture any water that may spill out during hand -cleaning.

8. If some light soils remain, repeat the above steps, making sure to thoroughly soak the soiled areas. Once the oven cavity is cleaned, wipe any excess water with a clean dry towel.

9. Replace racks and any other accessories.

TROUBLESHOOTING

BEFORE CALLING FOR SERVICE

First try the solutions suggested here to possibly avoid the cost of a service call.

COOKTOP PROBLEMS

Problem	Possible Cause	Solution
Burner will not ignite	There is no power to the range.	Make sure electrical plug is plugged into a live, properly grounded outlet. Replace the fuse or reset the circuit breaker.
Burner will not operate	First time use. Air still in the gas line.	Turn on any one of the surface burner knobs to release air from the gas lines.
	Control knob is not set correctly.	Push in the knob before turning to a setting.
	The burner port is clogged.	Clean burner port opening using a stiff, nylon toothbrush or a straightened paper clip.
Burner flame is too high or too low	Cooktop gas supply is not correct.	Ensure the range is set for the correct gas type. It is factory set for natural gas. If connecting to LP gas, the burners should be converted to LP gas with the orifice kit supplied and the pressure regulator converted to the LP gas setting by a qualified technician.
	The gas pressure is not correct.	Make sure the pressure regulator is installed correctly and the gas line pressure is correct. See Installation Instructions.

Problem	Possible Cause	Solution
Excessive heat around cookware on the cooktop	The cookware is not the proper size for the burner.	Use cookware with a bottom surface approximately the same size as the cooking area and burner. Cookware should not extend more than 1" (2.5 cm) outside the cooking area. Adjust the flame so that it does not come up around the cookware.
Burner flames are uneven, yellow and/or noisy	Burner port(s) are clogged.	Clean burner port opening using a stiff, nylon toothbrush or a straightened paper clip.
	Burner caps are not positioned properly.	Place burner caps so that the alignment pins are properly aligned with the slots.
	Propane gas is being used.	The range should be converted to LP gas by a qualified technician.
Burner makes popping noises	The burner is wet.	Allow the burner to dry before using.
	The burner cap or gas spreader is not positioned correctly.	Place burner caps so that the alignment pins are properly aligned with the slots.
Cooking results are not what are expected	Using incorrect cookware.	See the "Using the Proper Cookware" section.
	The control knob is not set to the proper heat level.	See the "Using the Gas Surface Burners" section.
Unable to maintain a rolling boil or will not cook fast enough	Using improper cookware.	Use pans with flat bottoms and that match the diameter of the cooktop burner selected. Adjust the flame so that flame does not extend beyond edge of pot. See the "Using the Proper Cookware" section.
	Using large cookware without a lid.	Large pots and pans can lose a lot of heat from the top. Cover the pot or pan with a lid to retain heat better.

OVEN PROBLEMS

Problem	Possible Cause	Solution
Strong odor when using a new oven	Manufacturing protective coating on the oven surfaces.	This is normal with a new range and will disappear after a few uses.
	Packaging materials exist.	Double-check that all packaging has been removed from the appliance - check around the doors sides and inside drawer.
Clicking noise can be heard when the oven is operating	The oven burner cycles on and off to maintain the oven temperature selected.	When the burner turns on, the electric spark ignition may be heard periodically. It is normal to spark for only a few seconds, followed by the sound of the burner igniting.
Oven is not heating	No power to the range.	Check the circuit breaker or fuse box to your house. Make sure there is proper electrical power to the oven.
	Oven control not turned on.	Make sure the oven temperature has been selected.
Oven is taking too long to cook	All ovens operate slightly differently from each other.	Adjust oven calibration upwards to make oven cook faster. See "Oven Settings" in the "Operation" section.
Oven is not cooking evenly	Not using the correct bakeware or oven rack position.	Refer to "Using Oven Racks" in the "Operation" section and the recommended rack position for the cooking modes. Always reduce recipe temperature by 25°F (15°C) when baking with Convention Bake mode. Recipe may perform better at a different rack position. Try moving the food down a rack position to make the bottom darker. Try moving food up a rack position to make the top darker.

Problem	Possible Cause	Solution
Food is overcooked	All ovens operate slightly differently from each other.	Adjust oven calibration downwards to reduce overcooking. See "Oven Settings" in the "Operation" section.
Cooling fan continues to run after the oven is turned off	The electronic components have not yet cooled sufficiently.	The fan will turn off automatically when the electronic components have cooled sufficiently.
Oven display stays Off	Power interruption.	Turn off power at the main power supply (fuse or breaker box). Turn breaker back on. If condition persists, call for service.
Oven display is on but will not respond	System error.	Resetting the power at the breaker box can usually reset the oven control and clear response issues.
Oven light is not working properly	Light bulb loose or burned-out.	Reinsert or replace the light bulb. Touching the bulb with fingers may cause the bulb to burn out.
Oven light stays on	The door is not closing completely	Check for obstruction in oven door. Check to see if the hinge is bent or door switch is broken.
Cannot remove lens cover	Soil build-up around the lens cover.	Wipe lens cover area with a clean, dry towel prior to attempting to remove the lens cover.
Clock and timer are not working properly	No power to the range.	Check the circuit breaker or fuse box to your house. Make sure there is proper electrical power to the oven.
Excessive Moisture on the door glass	Condensation from cooking foods with high moisture content.	This is normal. Condensation will evaporate as oven heats up. Convection Bake and Convection Roast will eliminate any moisture in the oven.
Porcelain Chips	Porcelain interior is chipped by the oven racks	When removing and replacing oven racks, always tilt racks upward and do not force them to avoid chipping the porcelain.

Problem	Possible Cause	Solution
Code with letters and numbers appears in the display	System error detected.	This is an error code. Press **Cancel/Off** to clear the display and stop the beeping. If necessary, reset oven power at the circuit breaker. If error code remains or repeats, write down error code and contact a qualified service provider for repairs.

DRAWER PROBLEMS

Problem	Possible Cause	Solution
Drawer does not slide smoothly or drags	The drawer is out of alignment	Fully extend the drawer and push it all the way back in.
	The drawer is overloaded or the load is unbalanced	Reduce load weight. Redistribute drawer loads.

ERROR CODES

Error Code	Description
F4E1	PCB component detection error.
F6E5	Clock error.
F7E1	Flame detection error.
F7E2	Ignition error.
F7E3	Main burner solenoid valve error.
F7E4	Upper oven burner solenoid valve error.
F7E5	Lower oven burner solenoid valve error.
F7E6	AC input voltage error.
F7E7	PCB output voltage error.