# Pantry Cabinet

Assembly Instruction

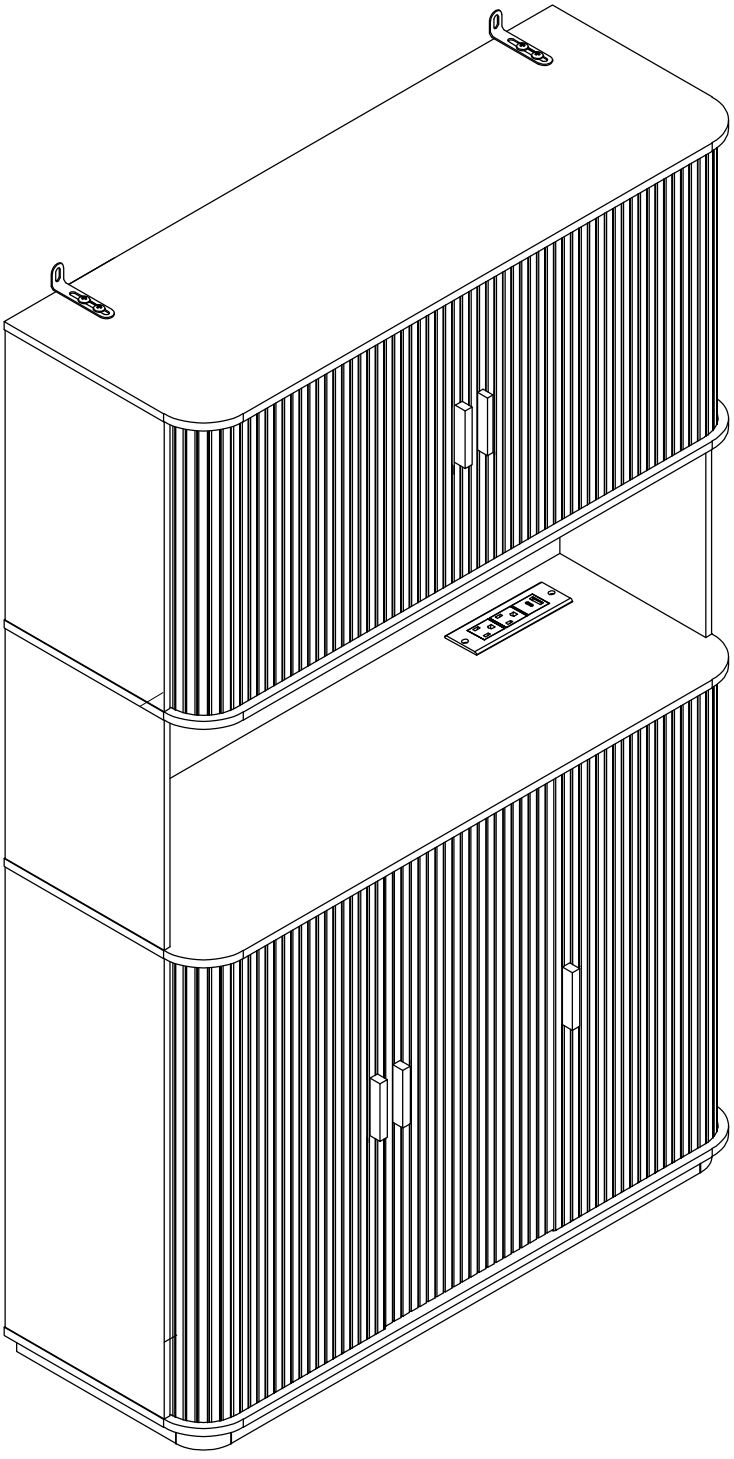

# INTRODUCTION

Thank you for purchasing our products. Please read the instructions carefully before installation and keep it in a safe place for future reference. If you need any assistance or support, please feel free to contact our customer support team.

# PRECAUTIONS

1.There are many components and accessories in the package. Each component and accessory is labeled with a letter or a number, check carefully before using any of them. Keep them away from children to prevent accidents.

2.Please install the product on a clean and soft underlay (such as carpet or cardboard) to avoid scratching or damaging the surface of the product.

3.The main components of the product is relatively heavy. Please pay attention to safety during installation.

4.The product is not stable during installation. Please do not move it randomly before it is completely installed.

5.This product requires two people to install.

6.If you have any questions during installation, please contact the customer service in time.

*PLEASE BE SURE TO FOLLOW THE INSTALLATION STEPS IN THE MANUAL TO AVOID UNNECCESSARY LOSSES CAUSED BY IMPROPER INSTALLATION.

*IF YOU NEED FURTHER ASSISTANCE,PLEASE CONTACT THE CUSTOMER SERVICE ONLINE.

# Parts List

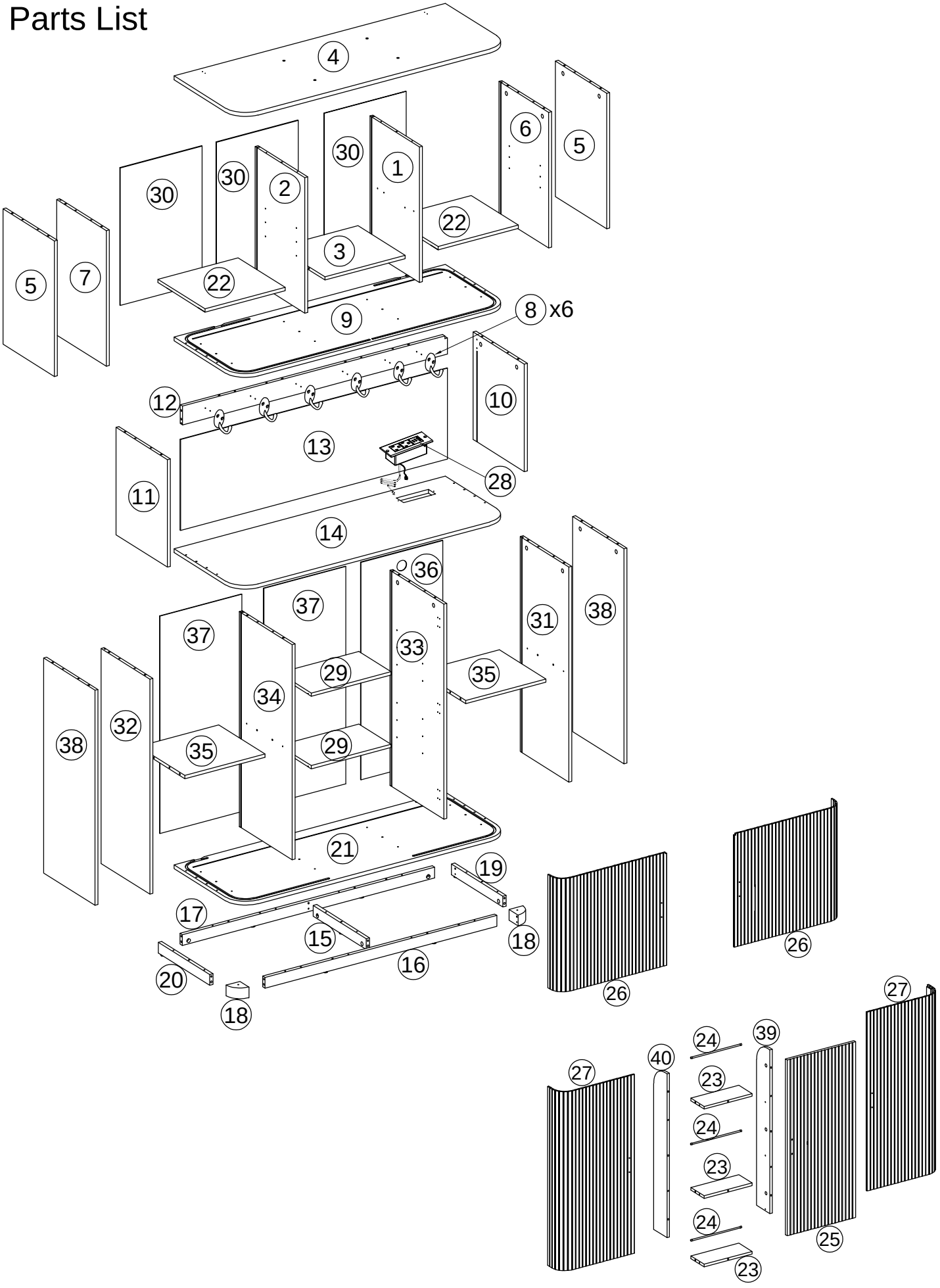
4
30
6
5
30
1
30
2
22
3
5
7
22
9
8 x6
12
10
13
28
11
14
36
37
31
38
37
33
29
35
34
38
32
35
29
21
19
17
15
18
16
20
18
26
26
27
27
40
24
39
23
24
23
24
23
25

# Parts List: Carton 1/2

| | | |
|---|---|---|
| 29 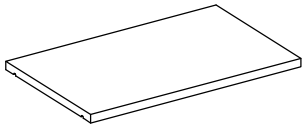 x1 | 30 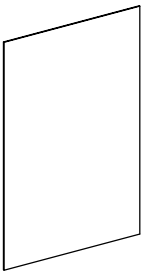 x3 | 31 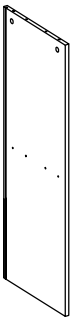 x1 |
| 32 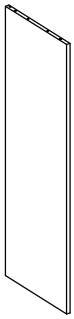 x1 | 33 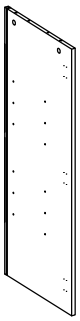 x1 | 34 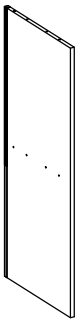 x1 |
| 35 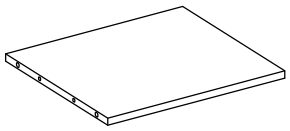 x2 | 36 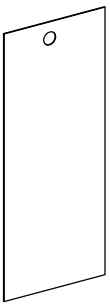 x1 | 37 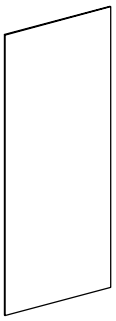 x2 |
| 38 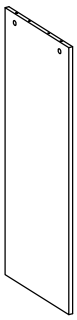 x2 | 39  x1 | 40  x1 |
| | | |

# Parts List: Carton 2/2

| | | |
|---|---|---|
| 1 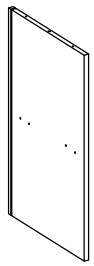 x1 | 2 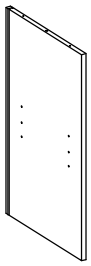 x1 | 3 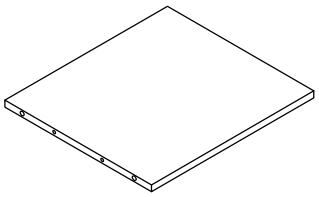 x1 |
| 4 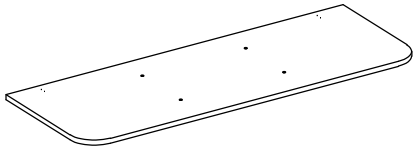 x1 | 5 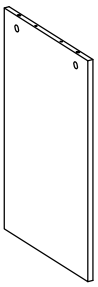 x2 | 6 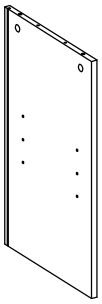 x1 |
| 7 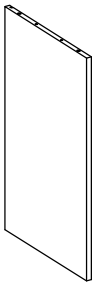 x1 | 8  x6 | 9 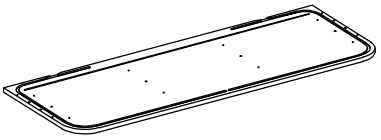 x1 |
| 10 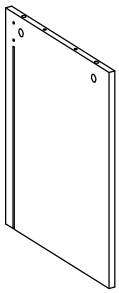 x1 | 11 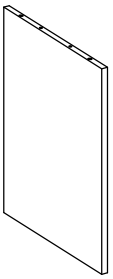 x1 | 12 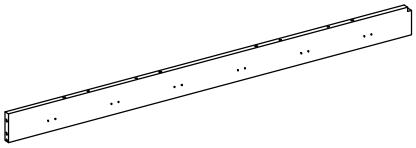 x1 |
| 13 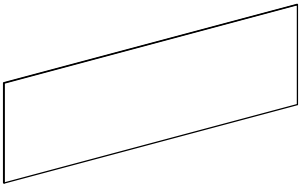 x1 | 14 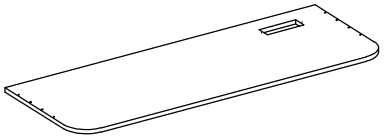 x1 | 15 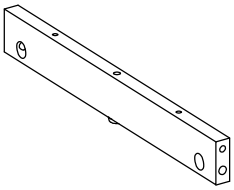 x1 |

# Parts List: Carton 2/2

| | | |
|---|---|---|
| 16 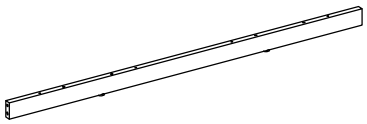 x1 | 17 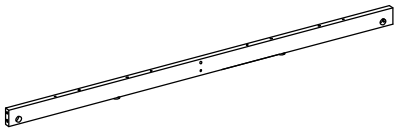 x1 | 18 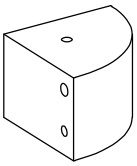 x2 |
| 19 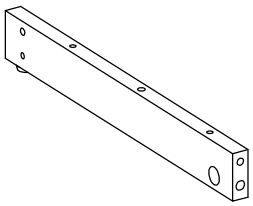 x1 | 20 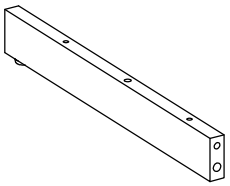 x1 | 21 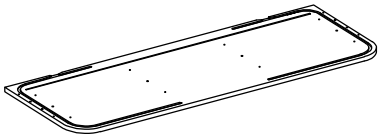 x1 |
| 22 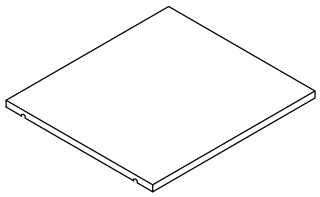 x2 | 23 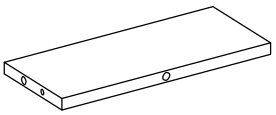 x3 | 24 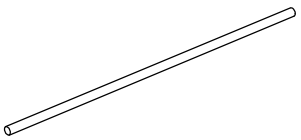 x3 |
| 25 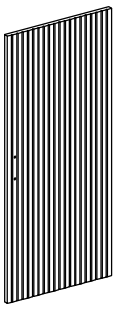 x1 | 26 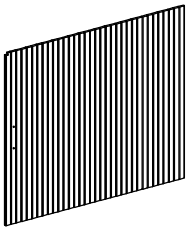 x2 | 27 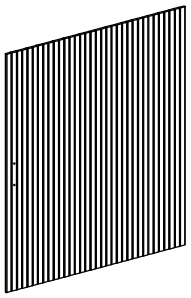 x2 |
| 28 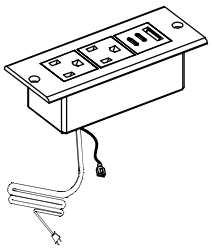 x1 | 29 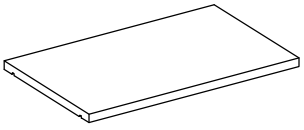 x1 | |

# Hardware list: Carton 2/2

| | | |
|---|---|---|
| A 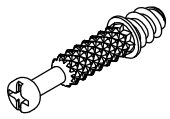 Ø6*34mm x67 | B 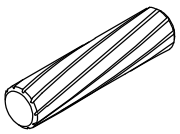 Ø6*30mm x93 | C 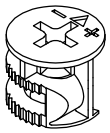 Ø15*9.5mm x67 |
| D 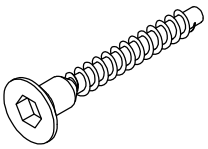 Ø5*48mm x32 | E 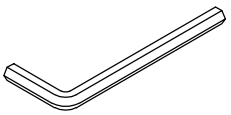 M3*60mm x1 | F 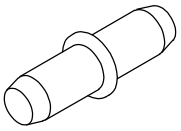 Ø5*17mm x16 |
| G 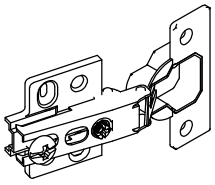 x3 | H 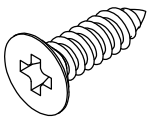 #3.5*14mm x18 | I 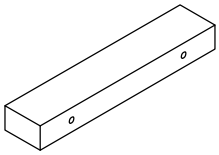 100*20*12mm x5 |
| J 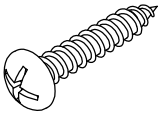 #4*25mm x2 | K 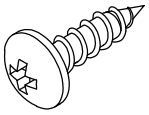 #4*20mm x8 | L 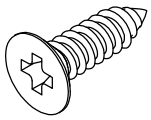 #3*12mm x14 |
| M 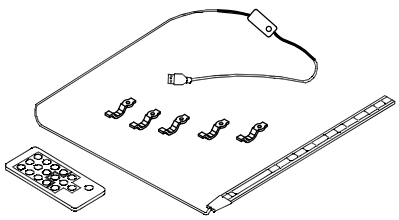 x1 | N 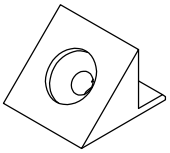 15*15*10mm x40 | O 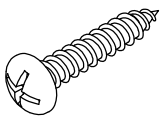 #4*38mm x16 |

# Hardware list: Carton 2/2

| | | |
|---|---|---|
| P 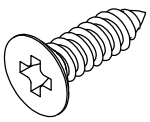 #3*16mm x40 | Q 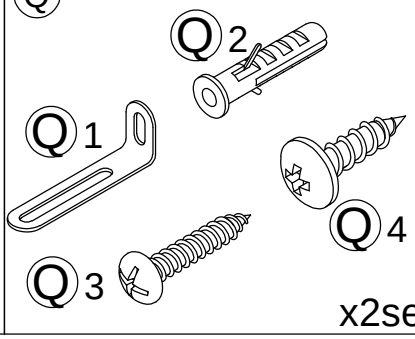  x2set | R 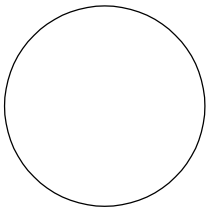 Ø20 x43 |

# Installation of Cams and Pins

Screw the pin into the hole. To set the cams correctly, ensure that the arrow on the cam is opening to the hole of the pin it is locking. Lock the cam by turning the cam head with a screwdriver until it is tightened. Please do not use an electric screwdriver to assemble the unit.

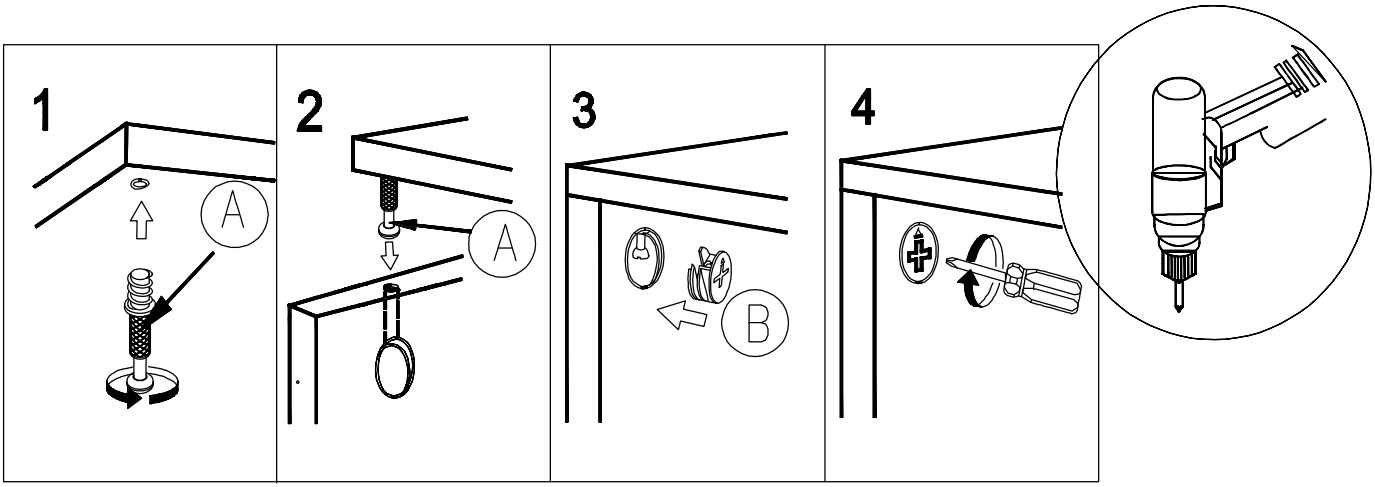


Read each step carefully before starting. It is very important that each step of instruction is performed in the correct order. If these steps are not followed in sequence, assembly difficulties will occur.

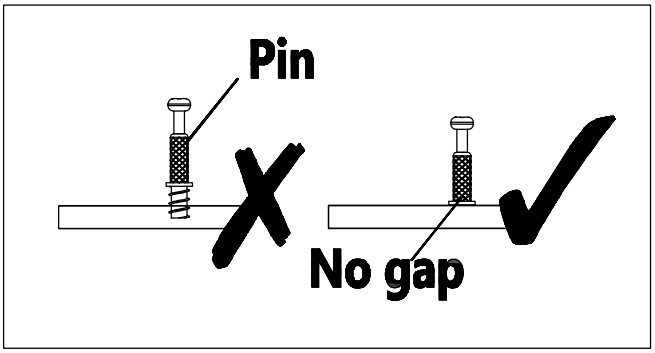

# STEP 1

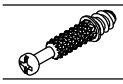

A x 4

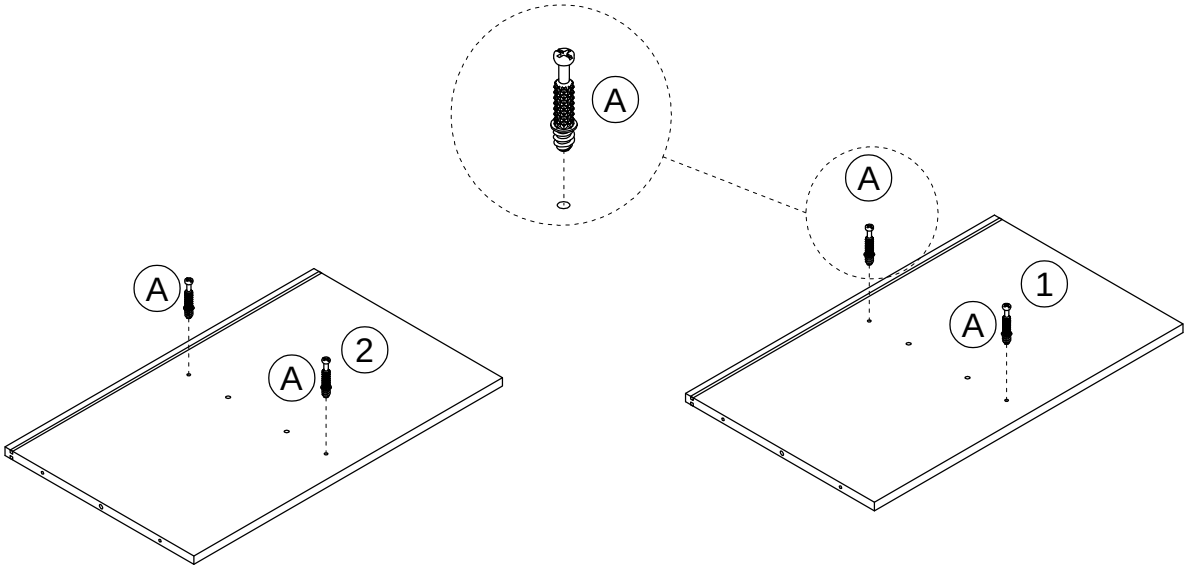


# STEP 2

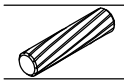

B x 4



C x 4

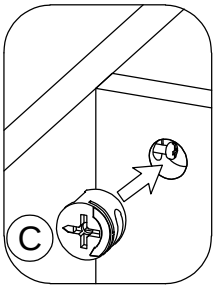


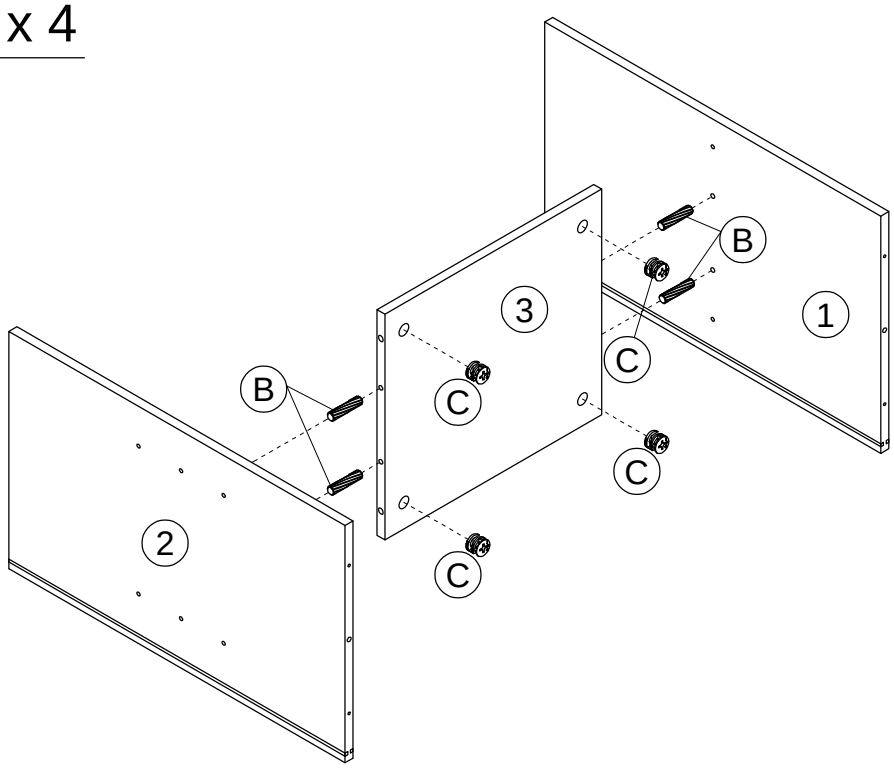

# STEP 3

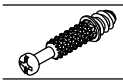

A x 8

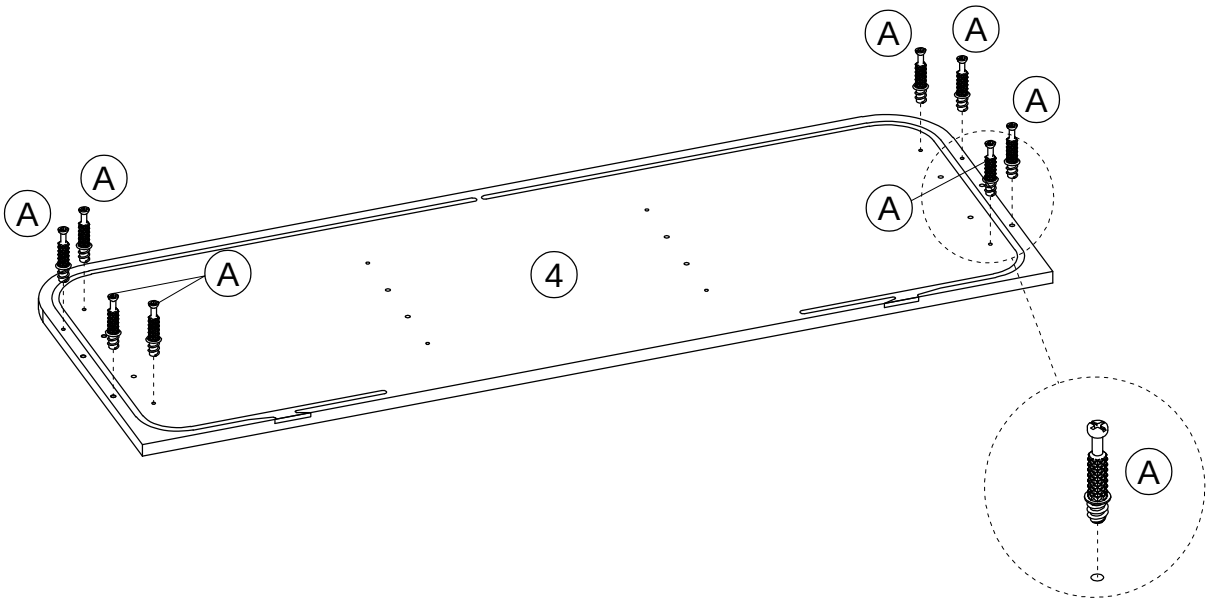


# STEP 4

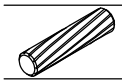

B x 4



C x 4

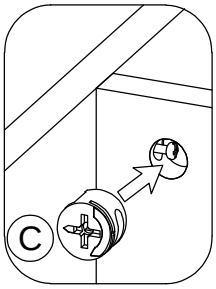


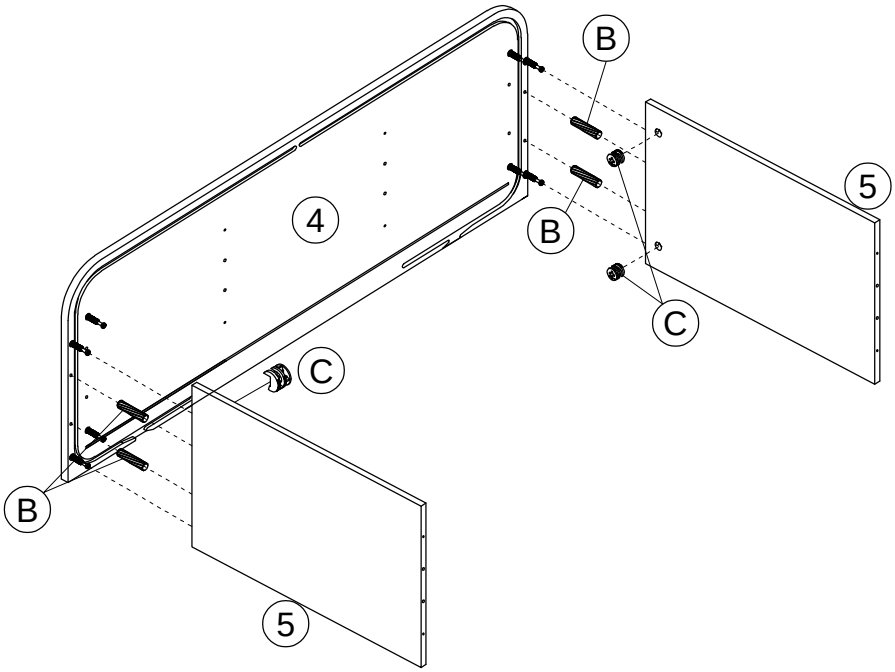

## STEP 5

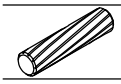
B x 4


C x 4

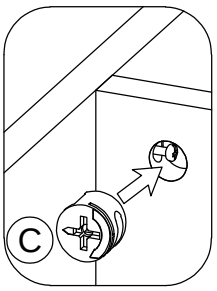


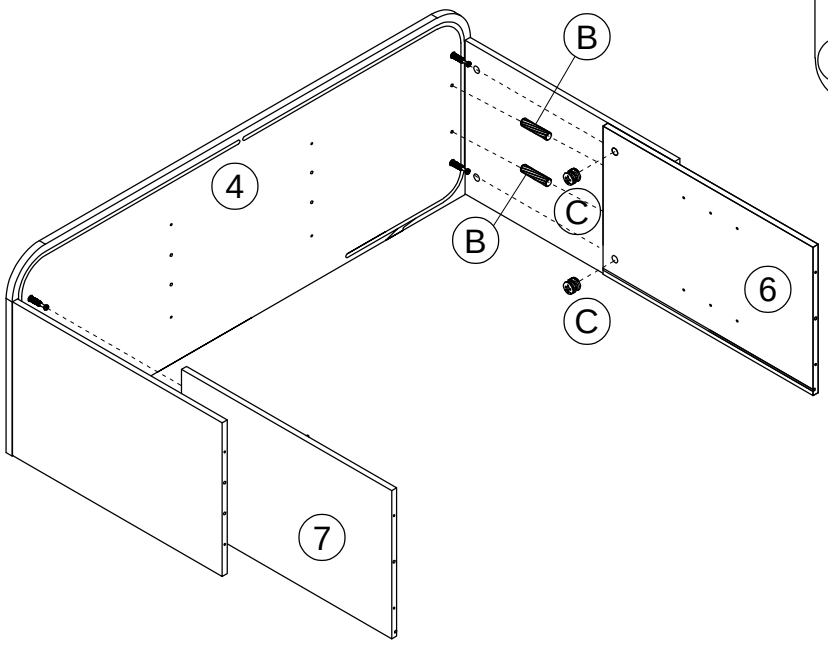


## STEP 6

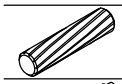
B x 4

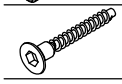
D x 4


E x 1

# STEP 7

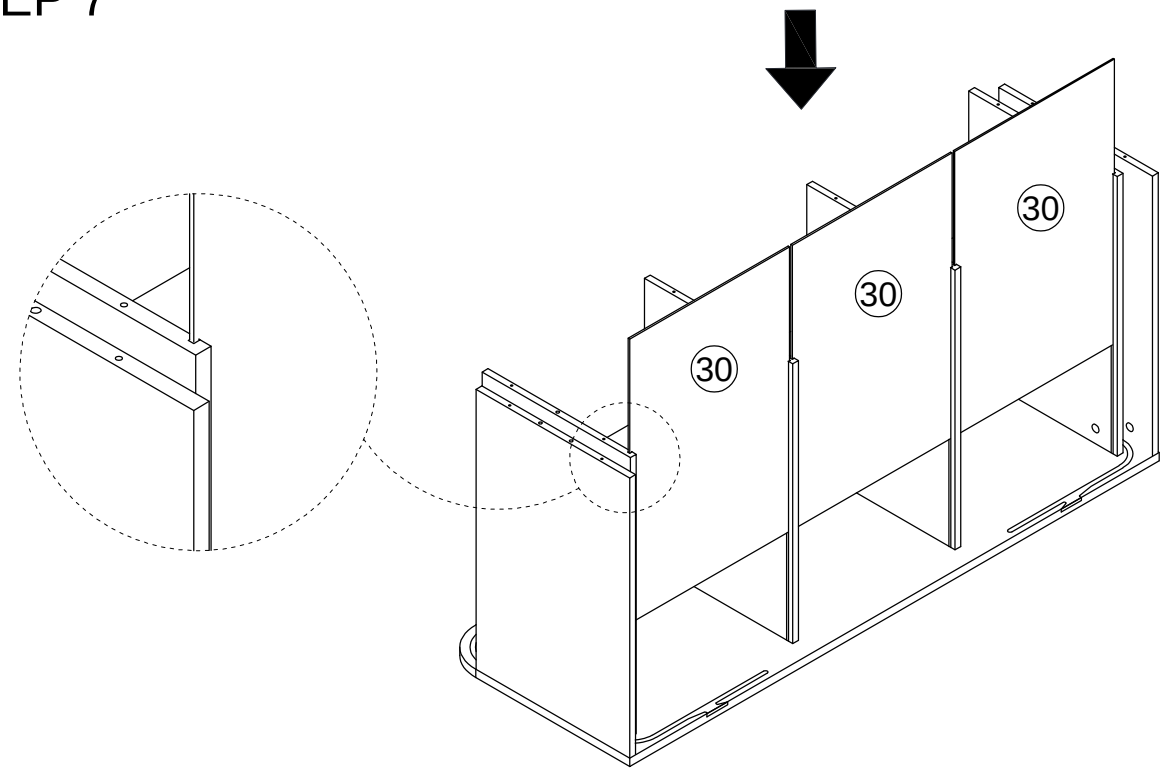


# STEP 8

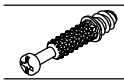

A x 8

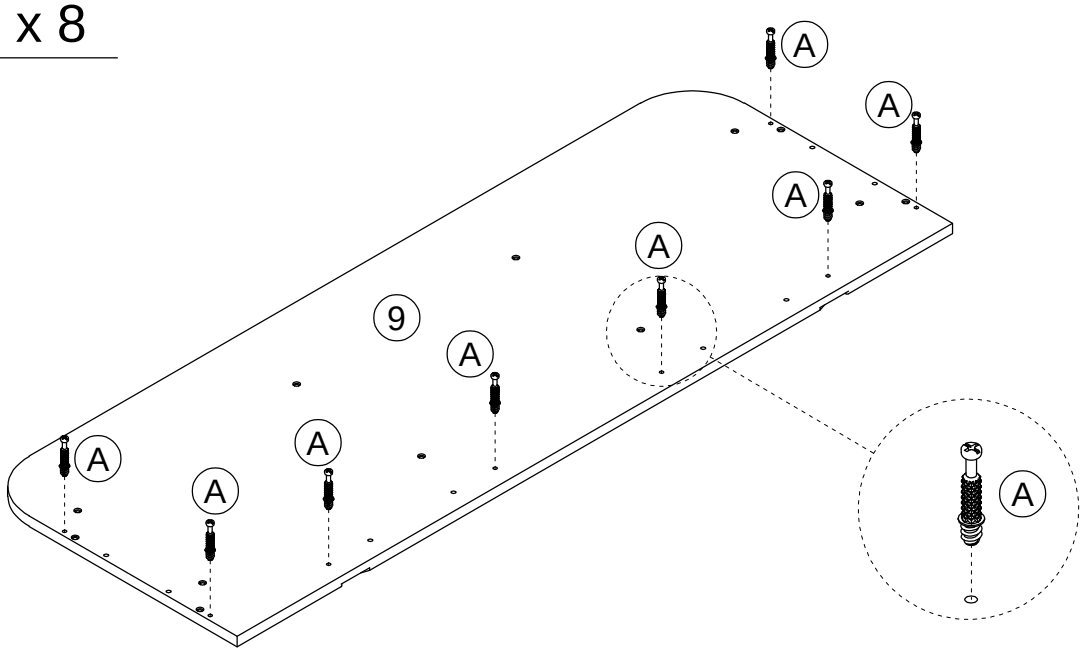

# STEP 9

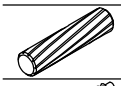
B x 8

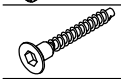
D x 12


E x 1

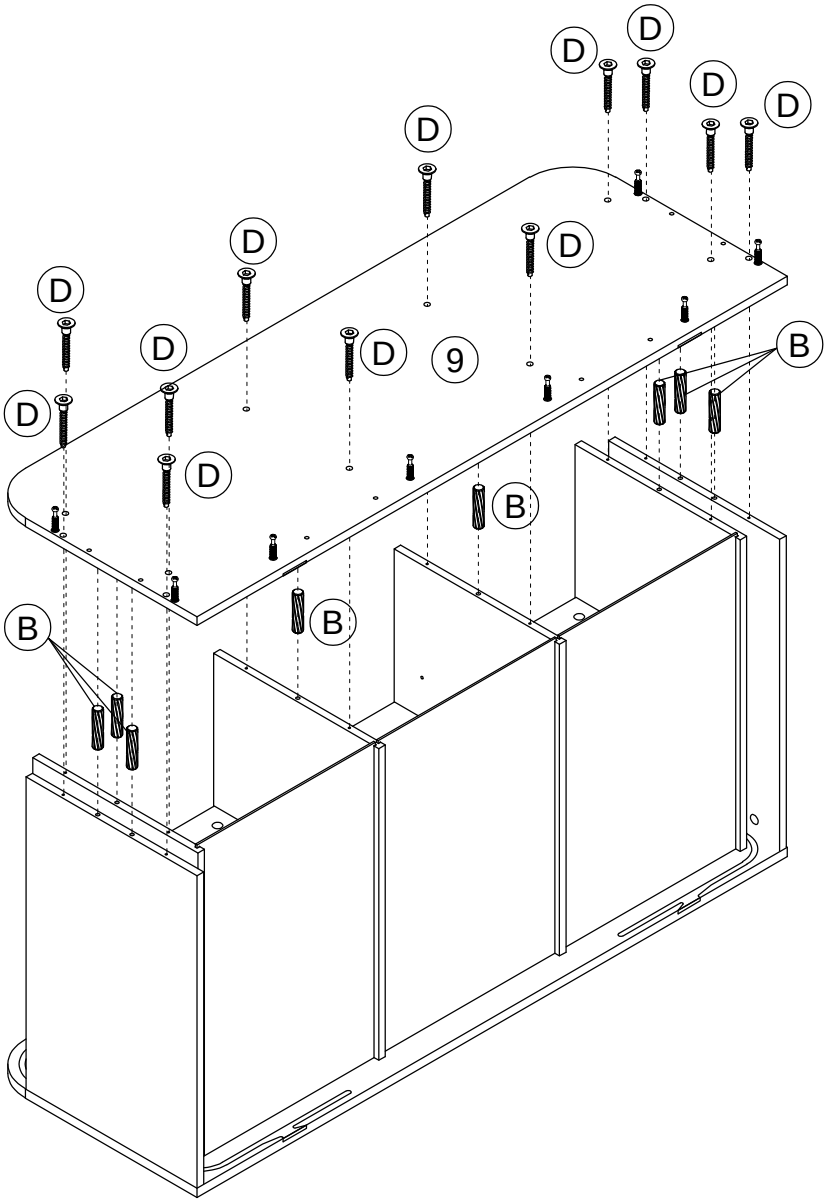


# STEP 10

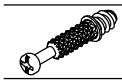
A x 4

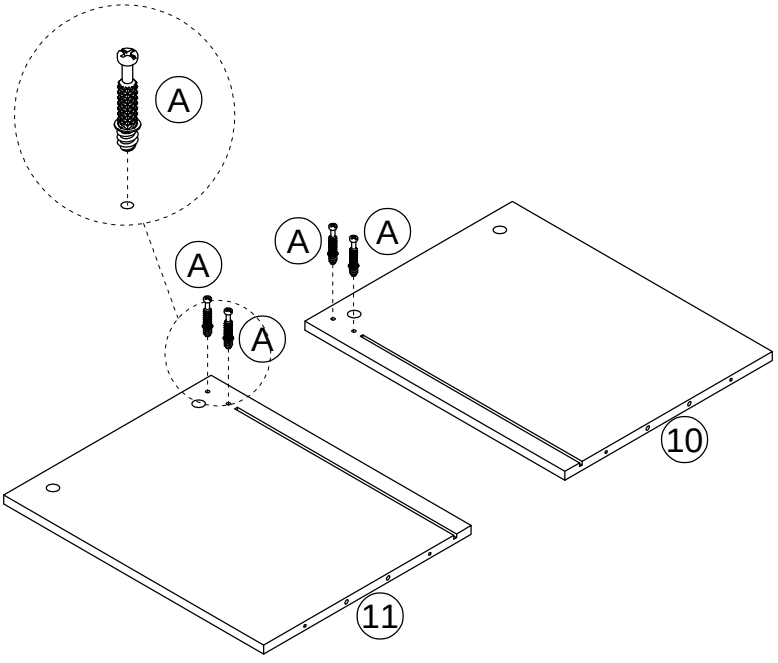

# STEP 11



L x 12

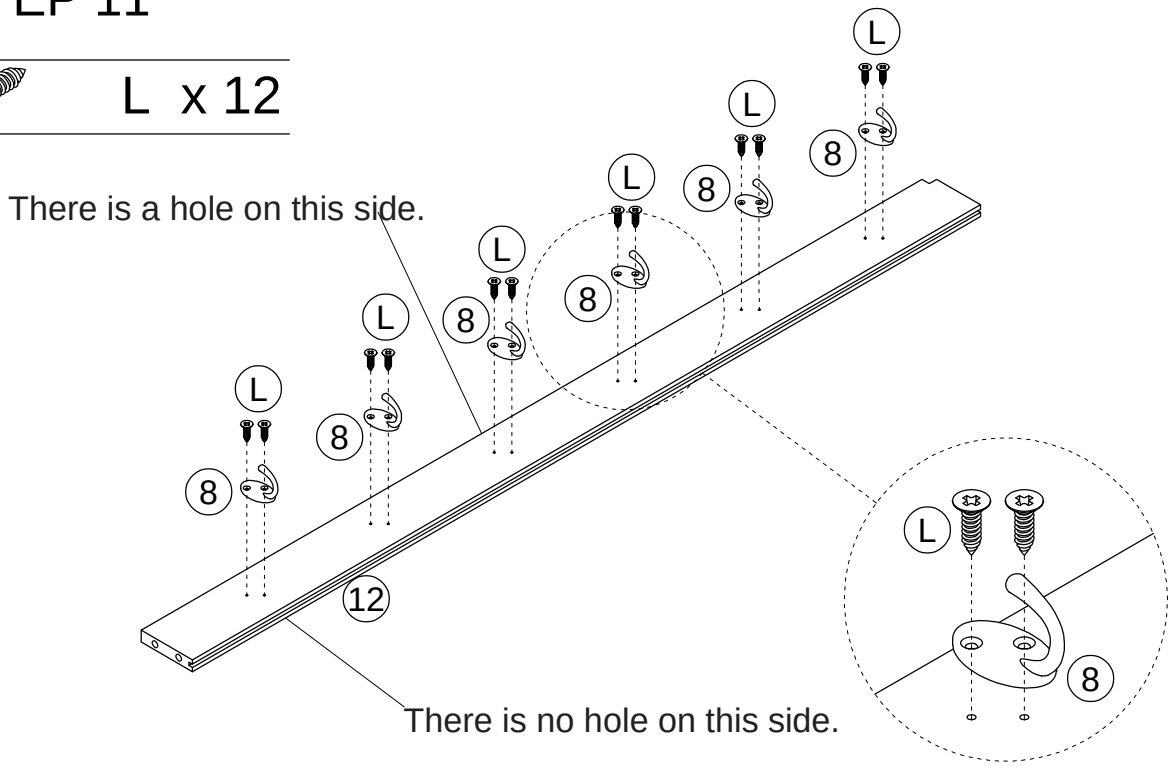


# STEP 12



C x 4

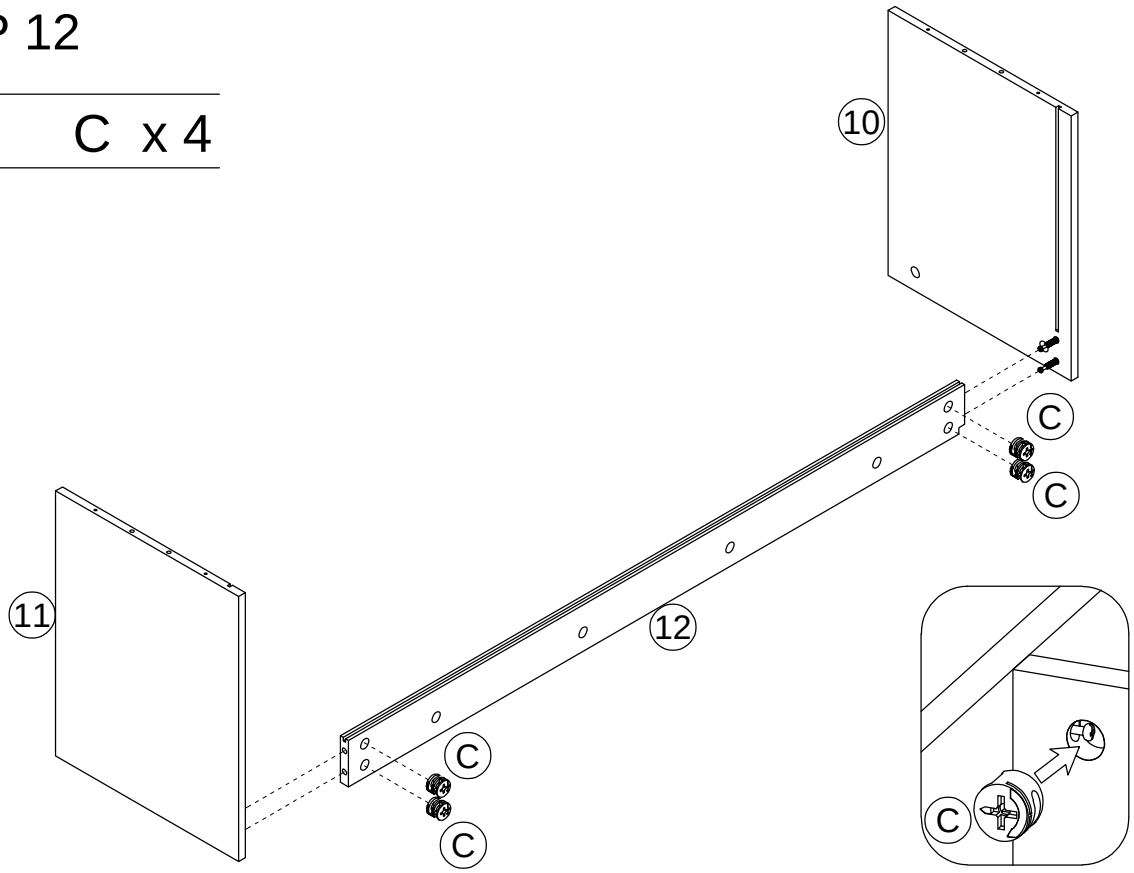

# STEP 13

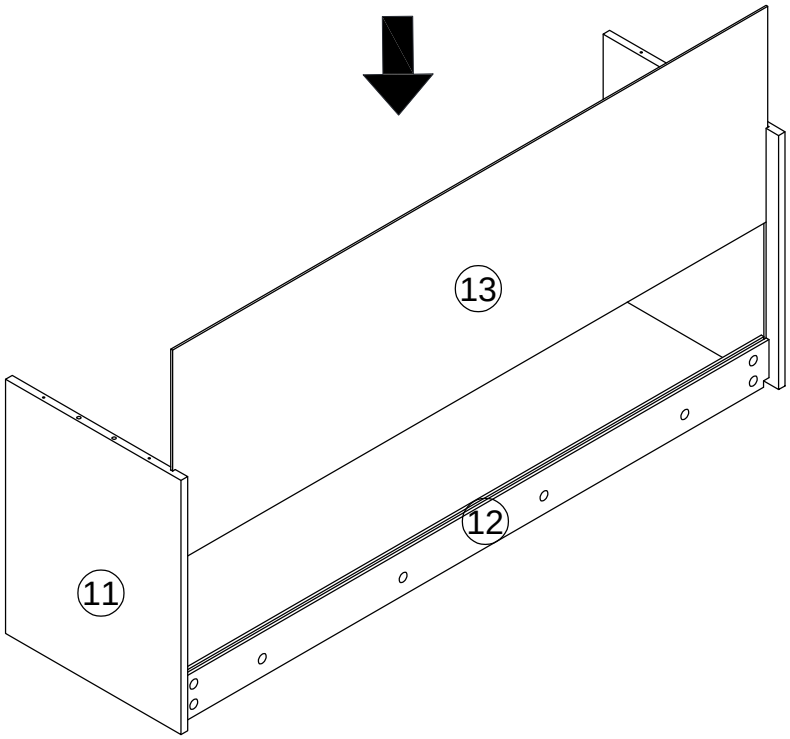


# STEP 14

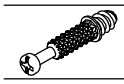

A x 12

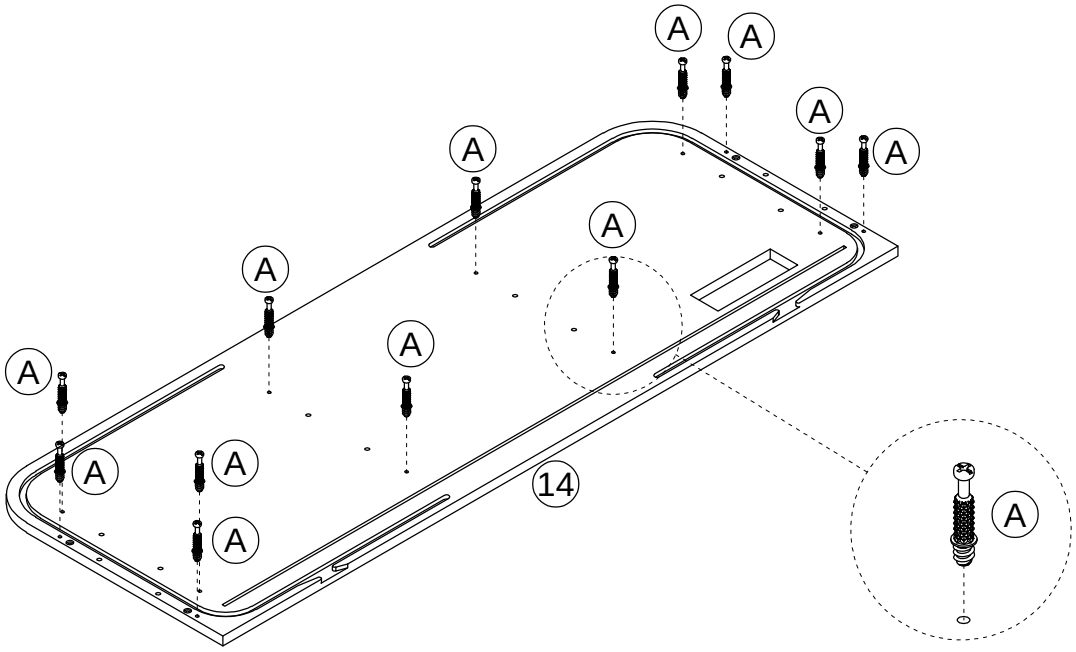

## STEP 15

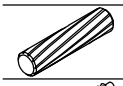
B x 4

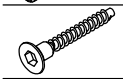
D x 4


E x 1

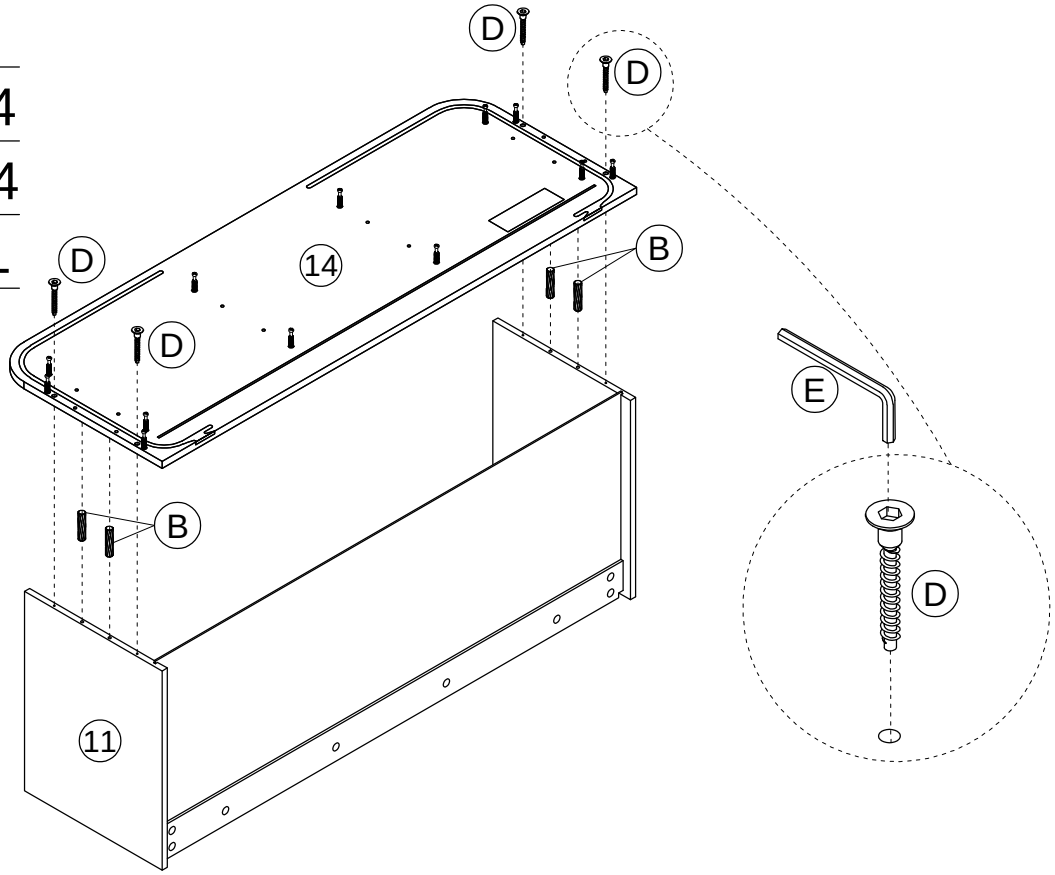


## STEP 16

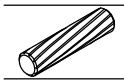
B x 4


C x 4

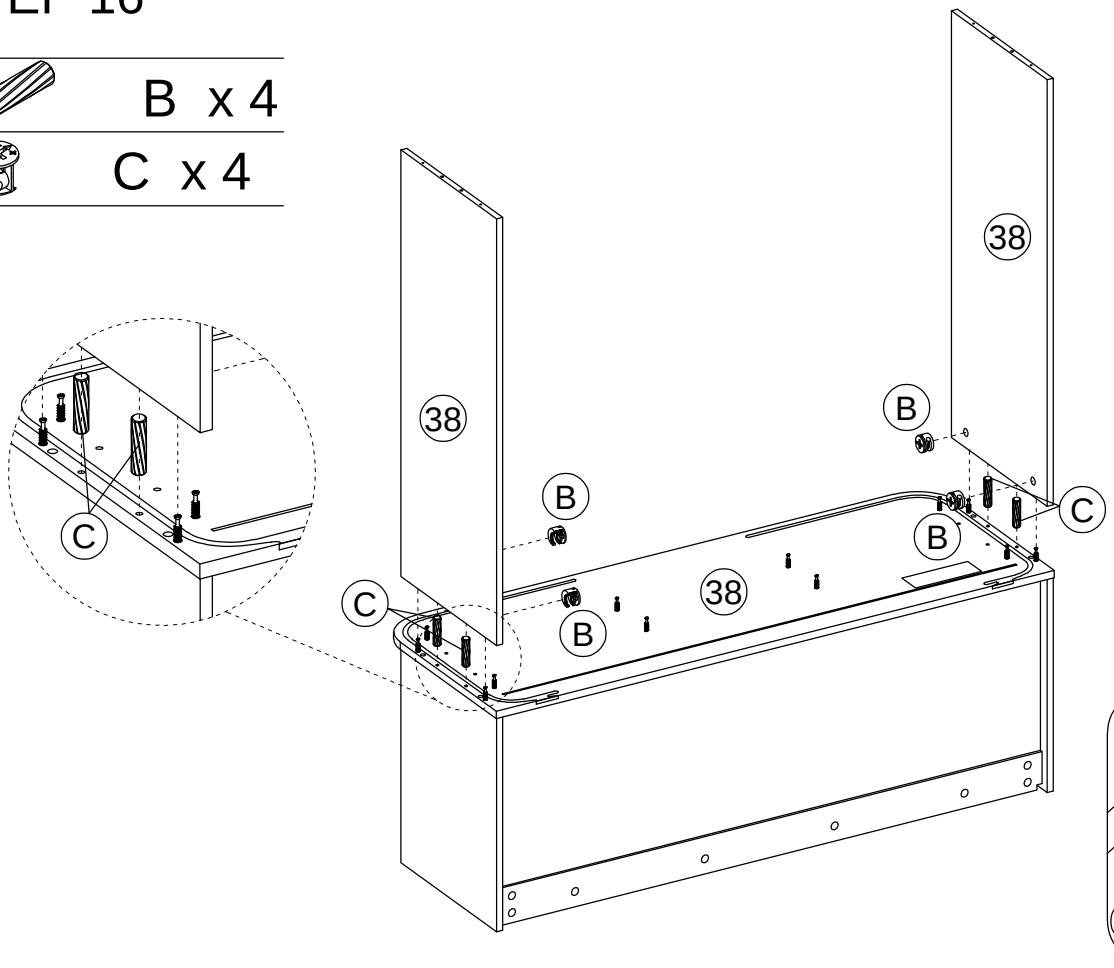

# STEP 17

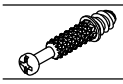

A x 8

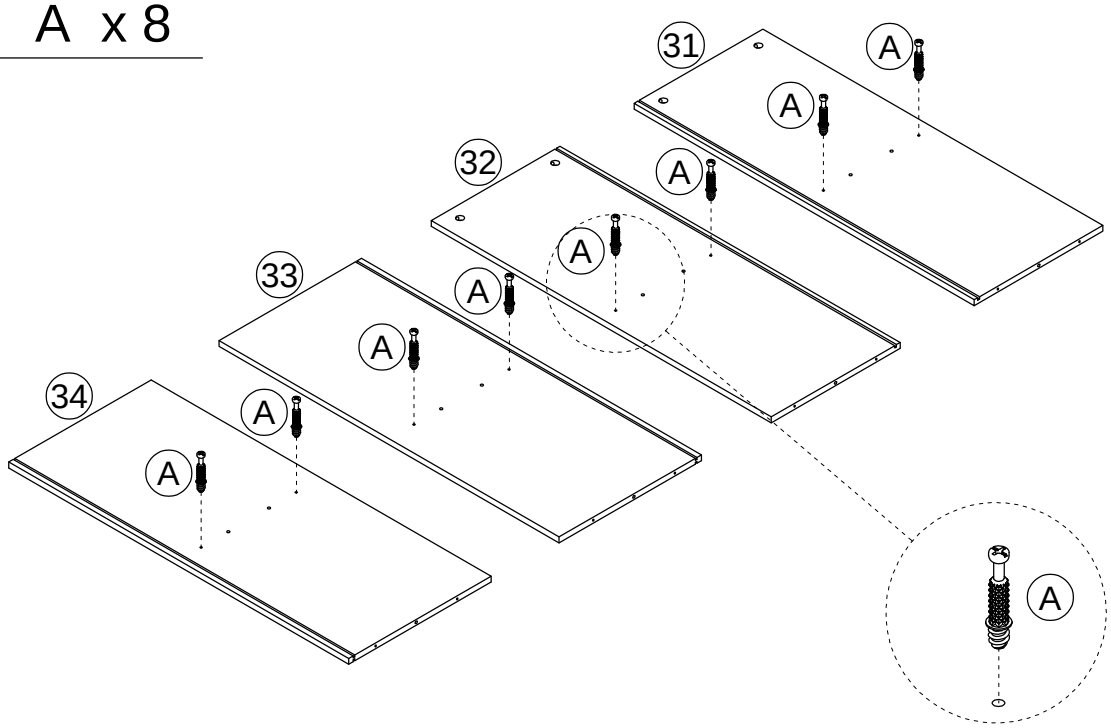


# STEP 18

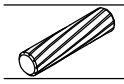

B x 8



C x 8

# STEP 19

| | |
|---|---|
| 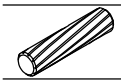 | B x 8 |
|  | C x 8 |

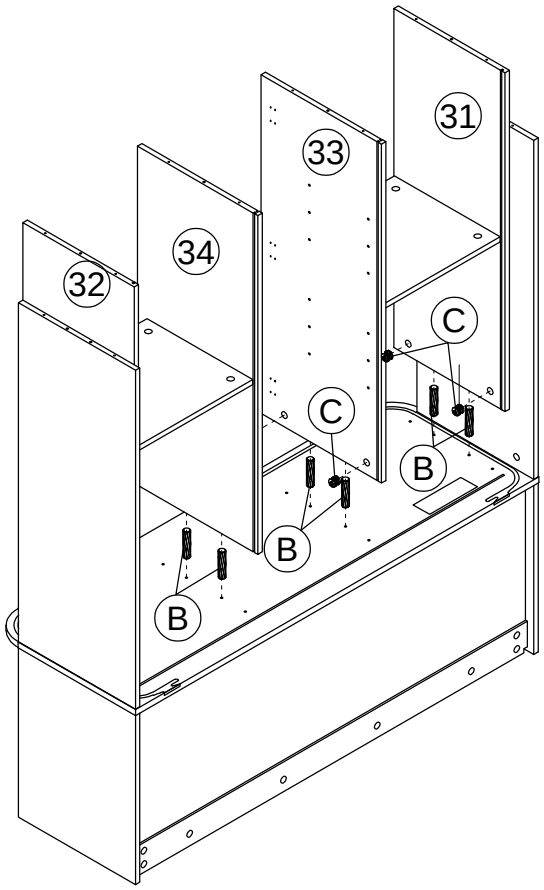


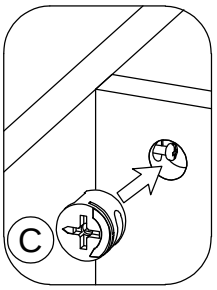


# STEP 20

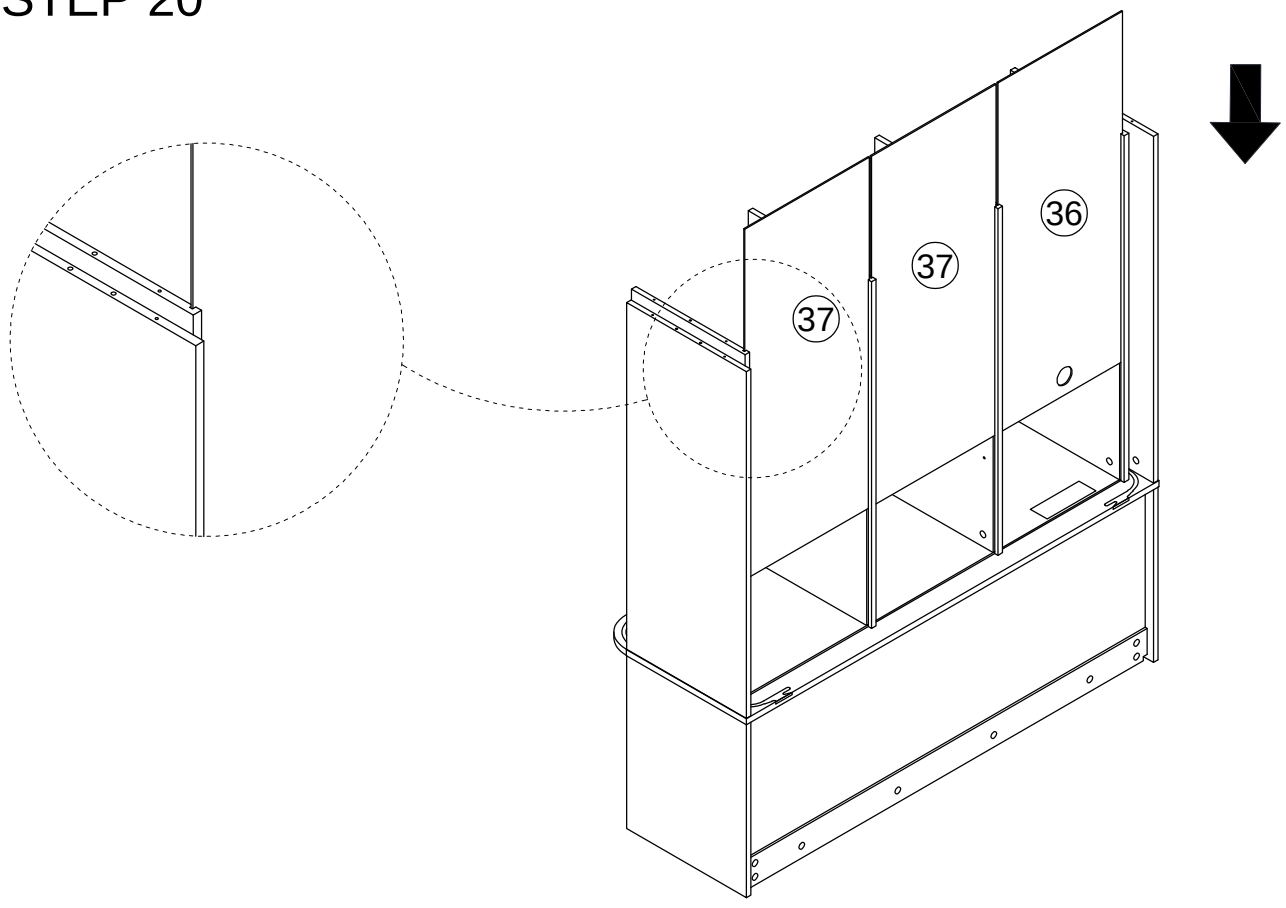

# STEP 21

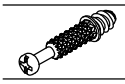

A x 8

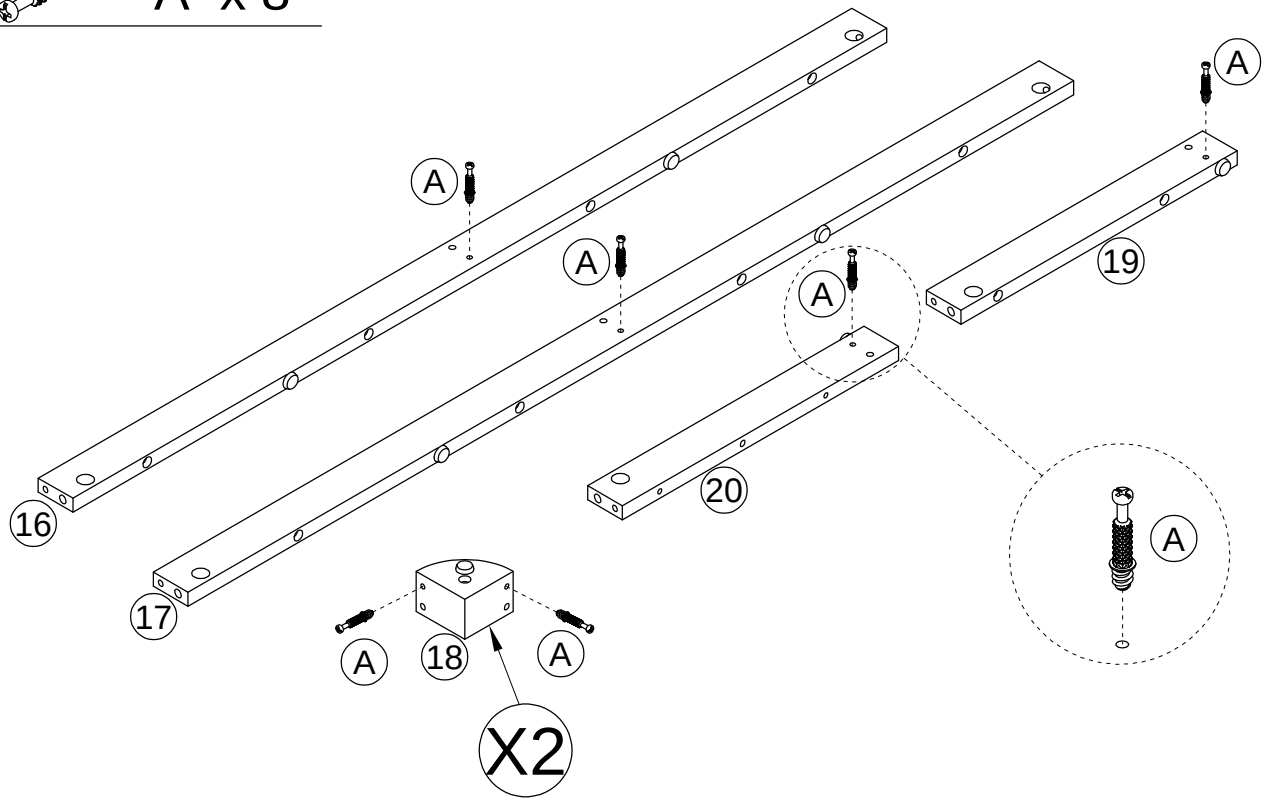


# STEP 22

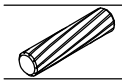

B x 2



C x 2

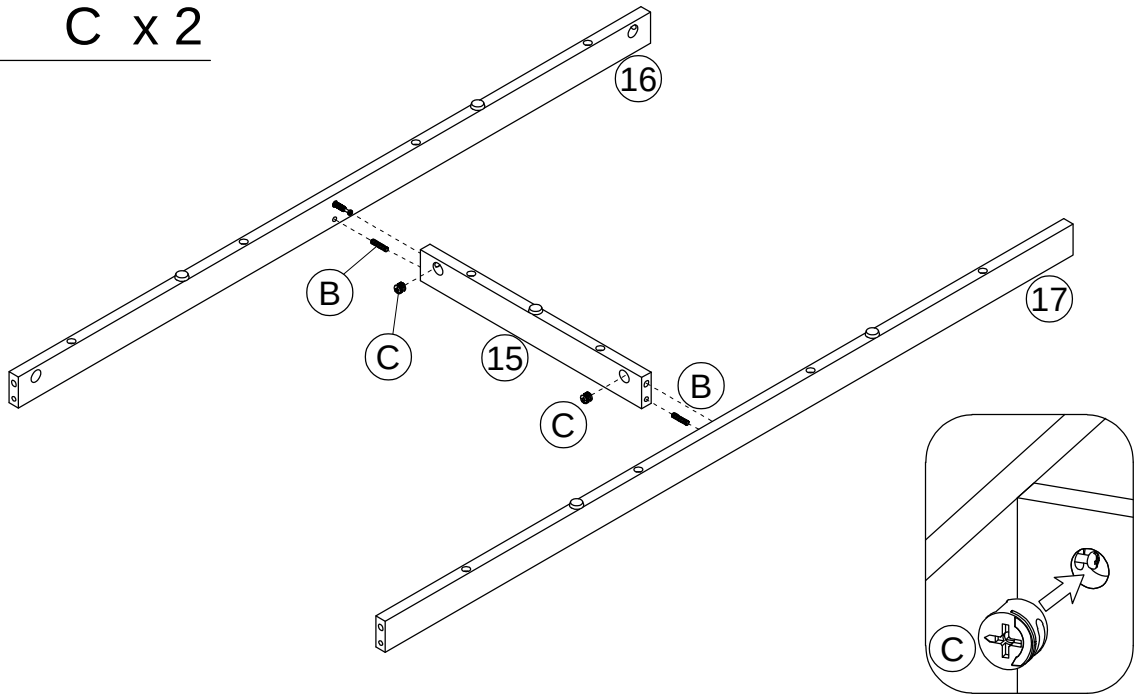

# STEP 23

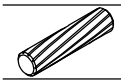
B x 2


C x 2

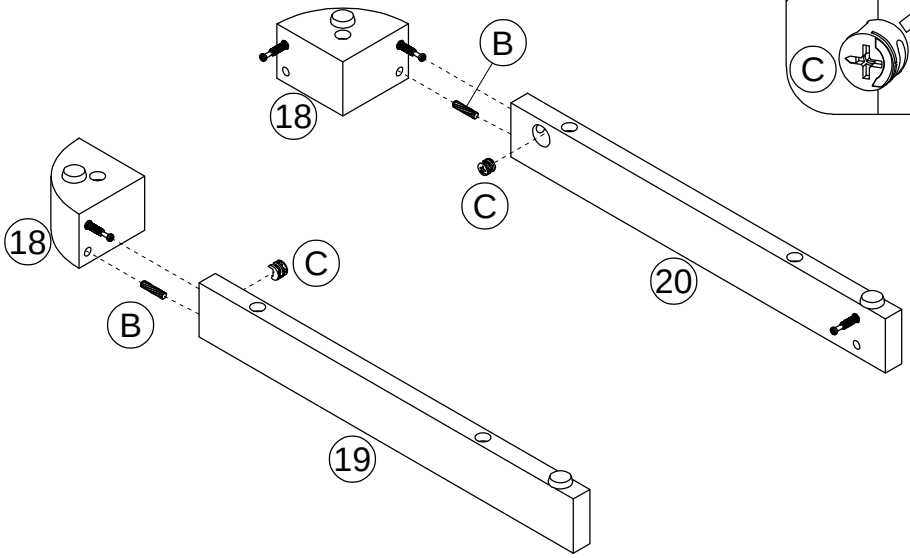


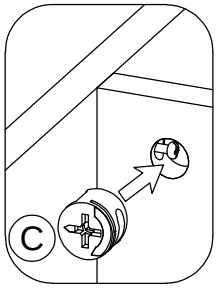


# STEP 24

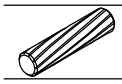
B x 4


C x 4

# STEP 25

| | |
|---|---|
| 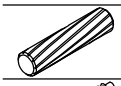 | B x 8 |
| 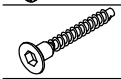 | D x 12 |
|  | E x 1 |

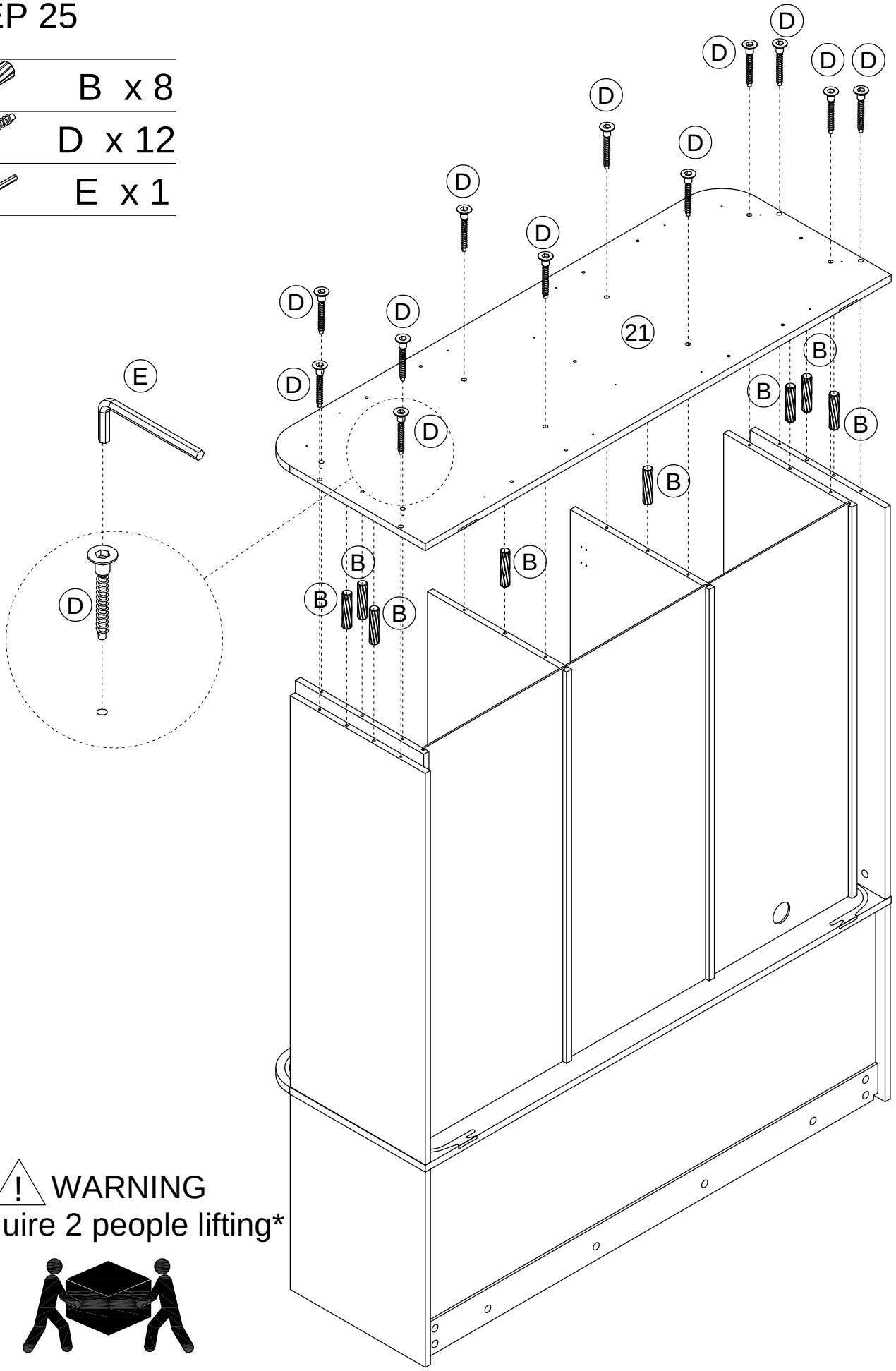


⚠ WARNING
*Require 2 people lifting*

# STEP 26

| | |
|---|---|
| 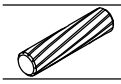 | B x 11 |
|  | O x 16 |

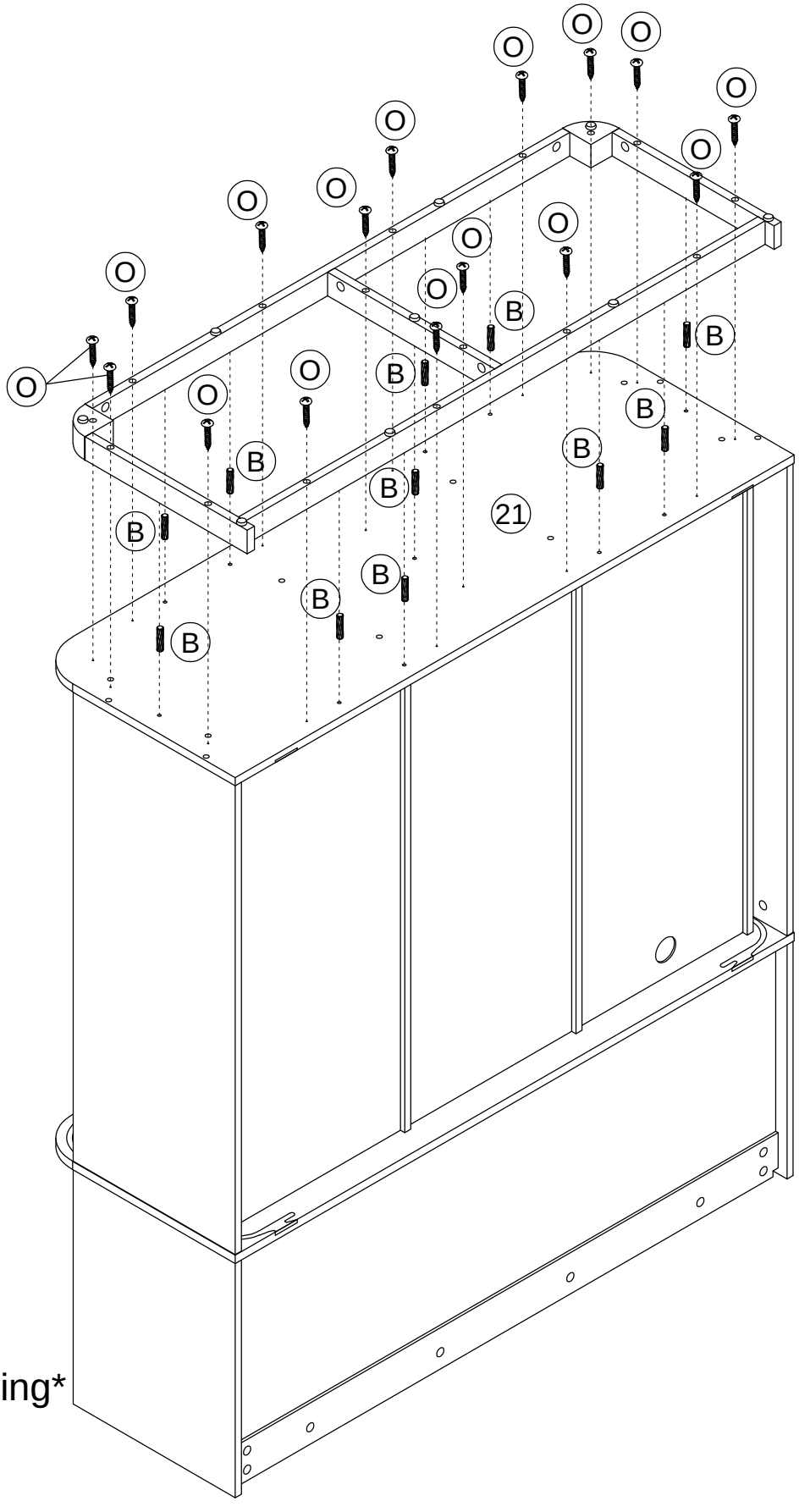


⚠ WARNING
*Require 2 people lifting*

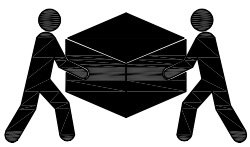

# STEP 27

| | |
|---|---|
| 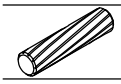 | B x 8 |
|  | C x 8 |

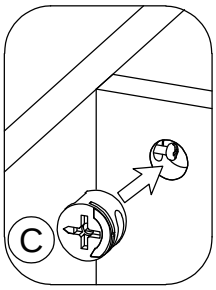


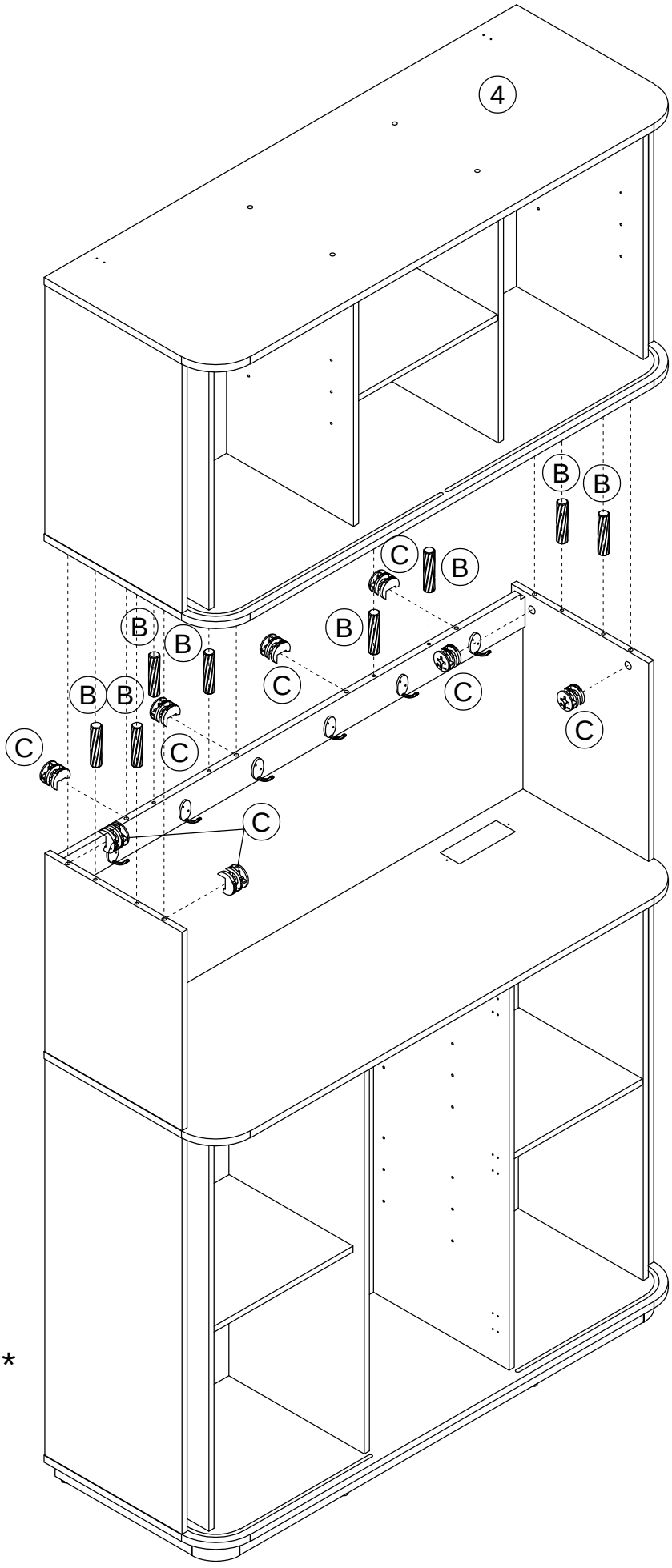


! WARNING
*Require 2 people lifting*

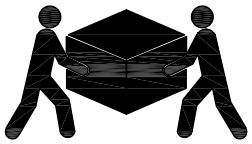

# STEP 28

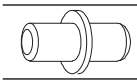

F x 16

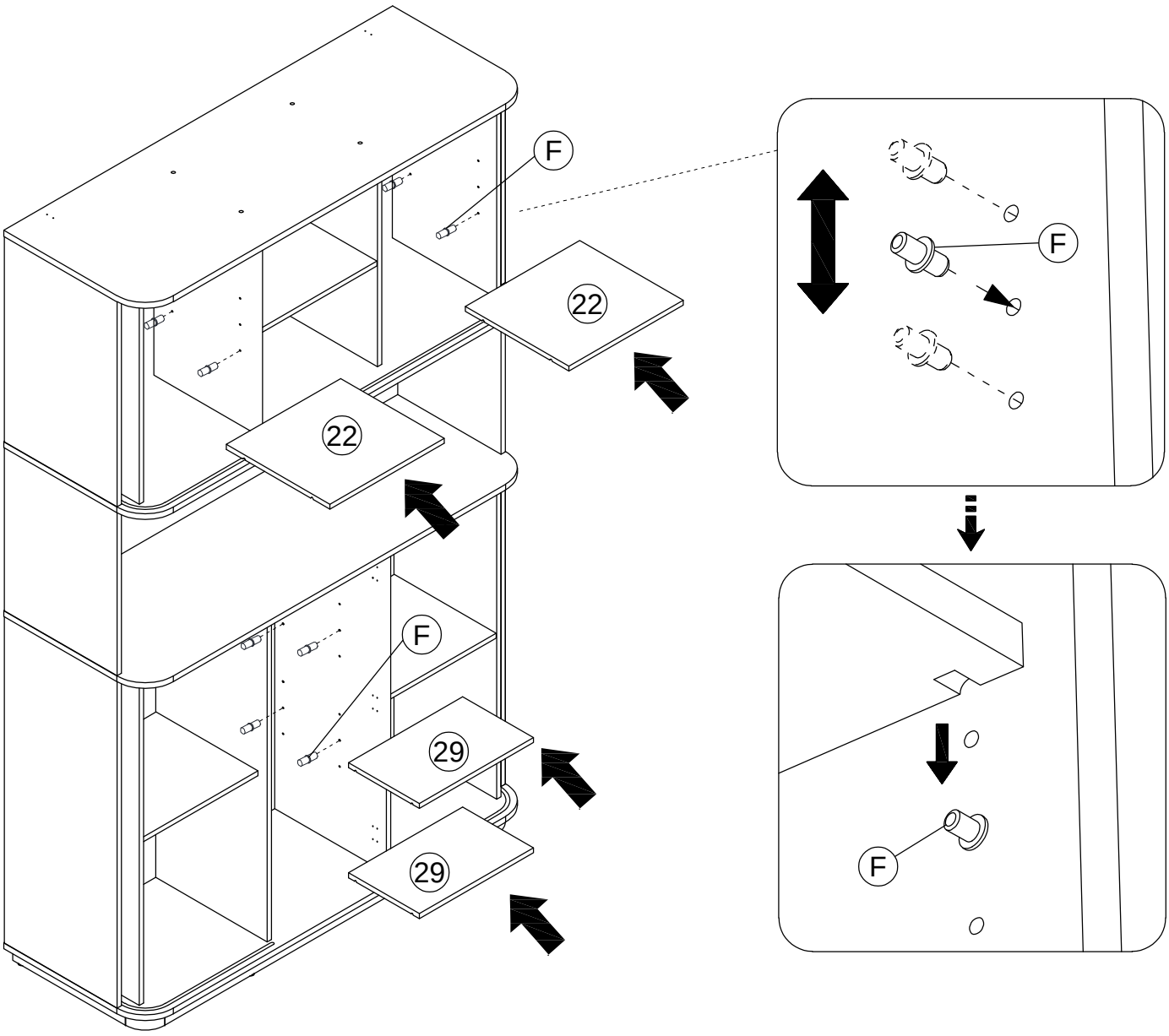

# STEP 29

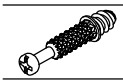

A x 6

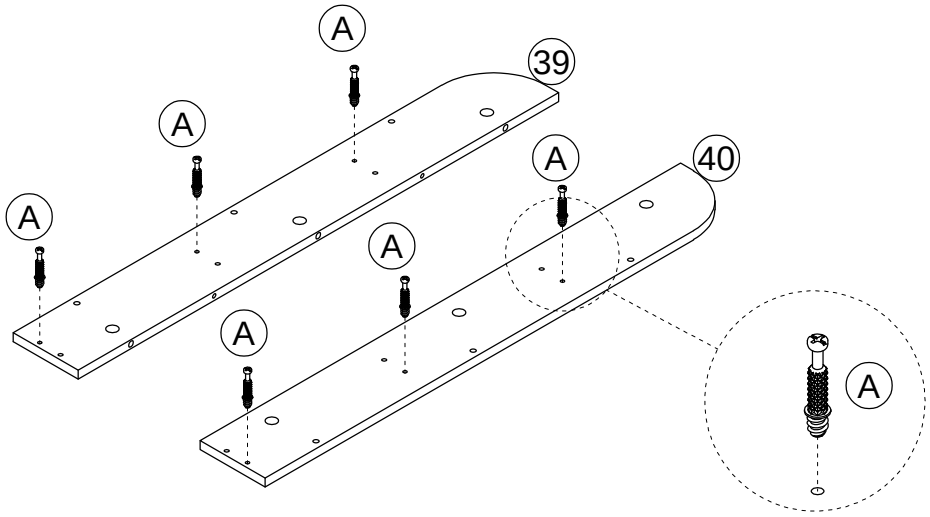


# STEP 30

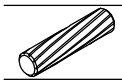

B x 6



C x 6

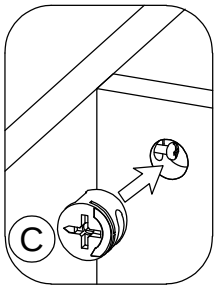


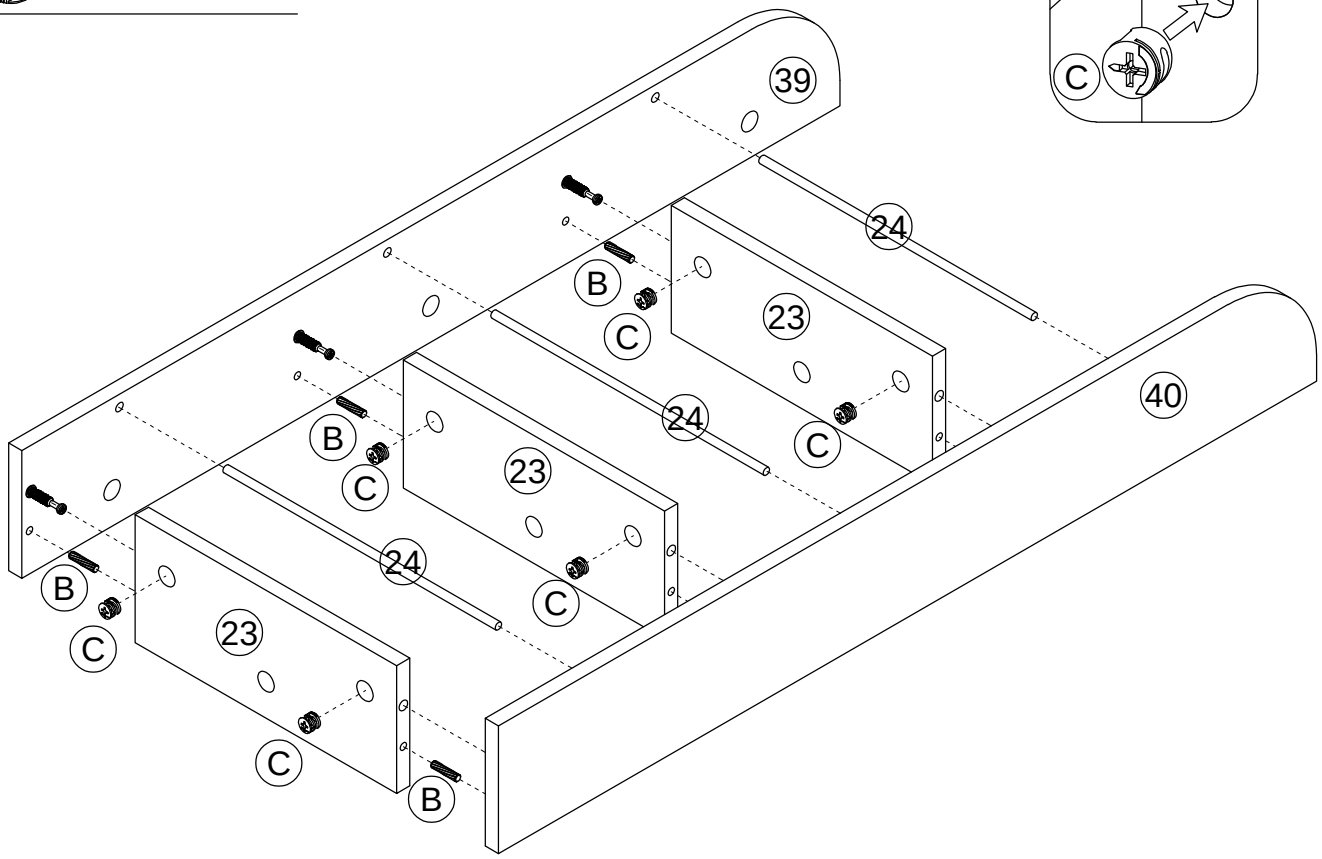

# STEP 31

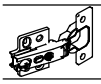

G x 3



H x 6

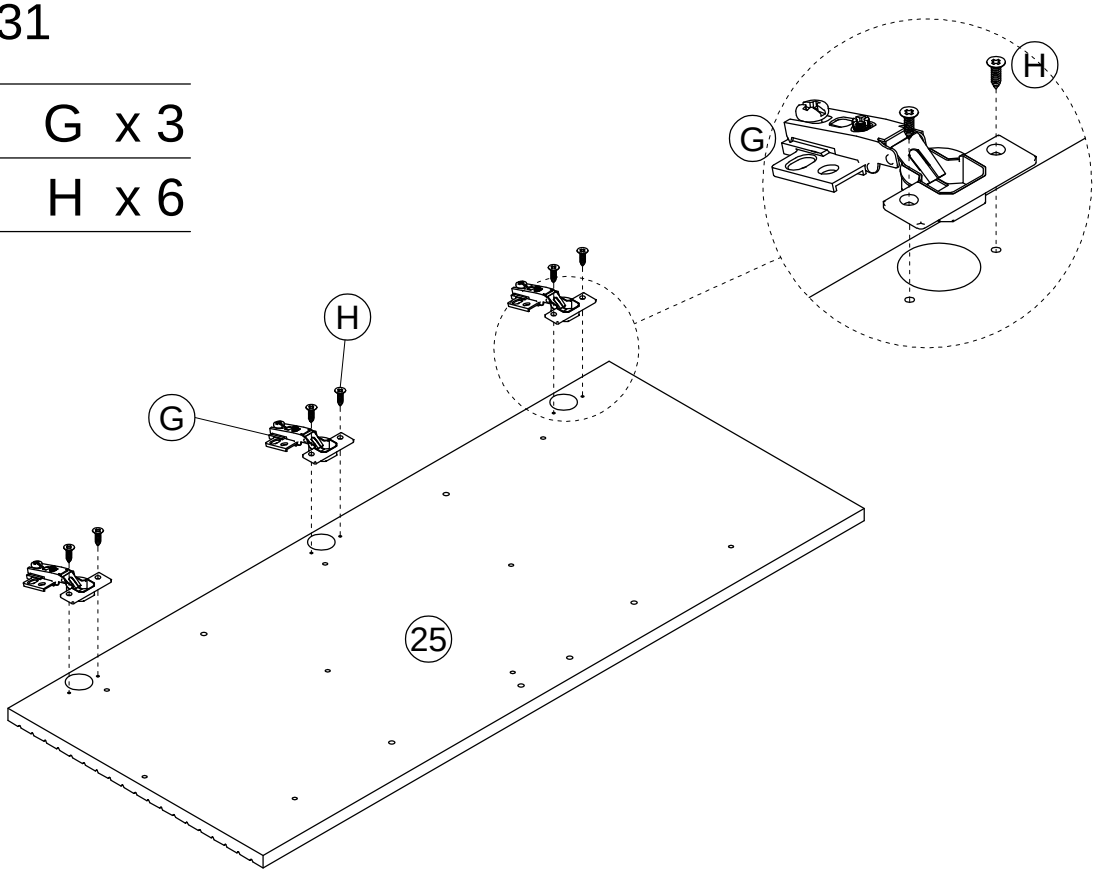


# STEP 32



I x 1



J x 2

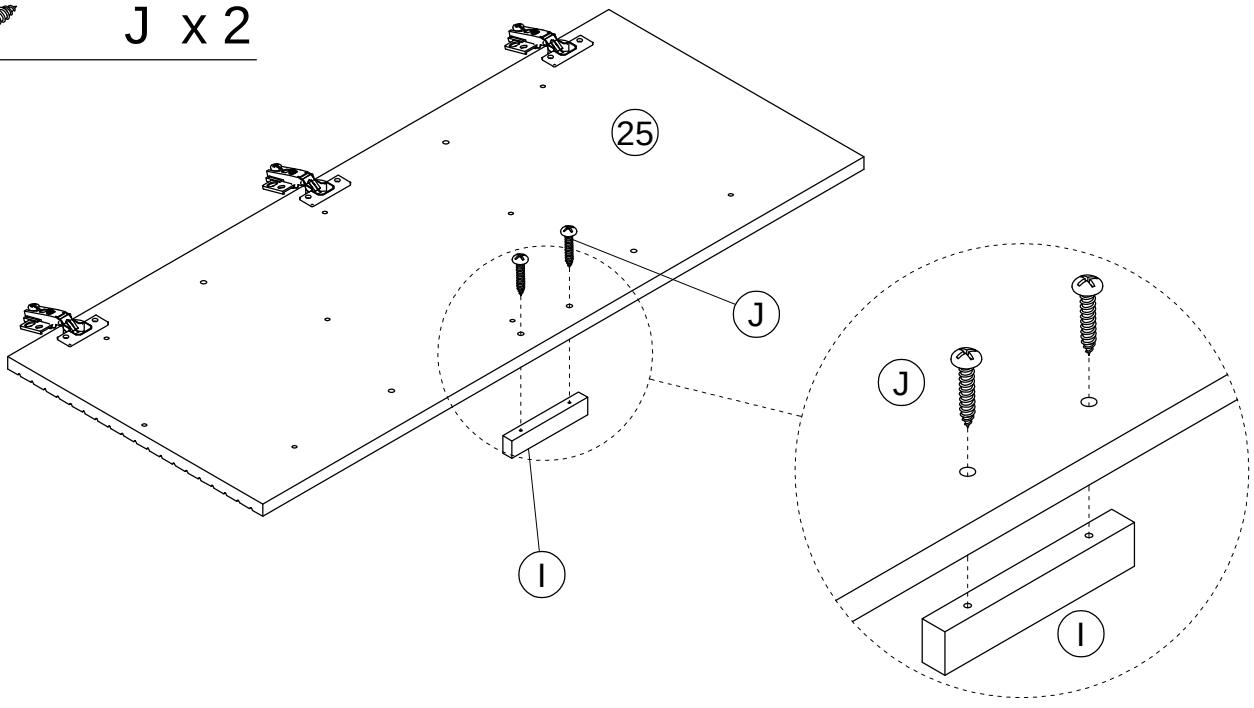

## STEP 33

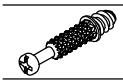

A x 9

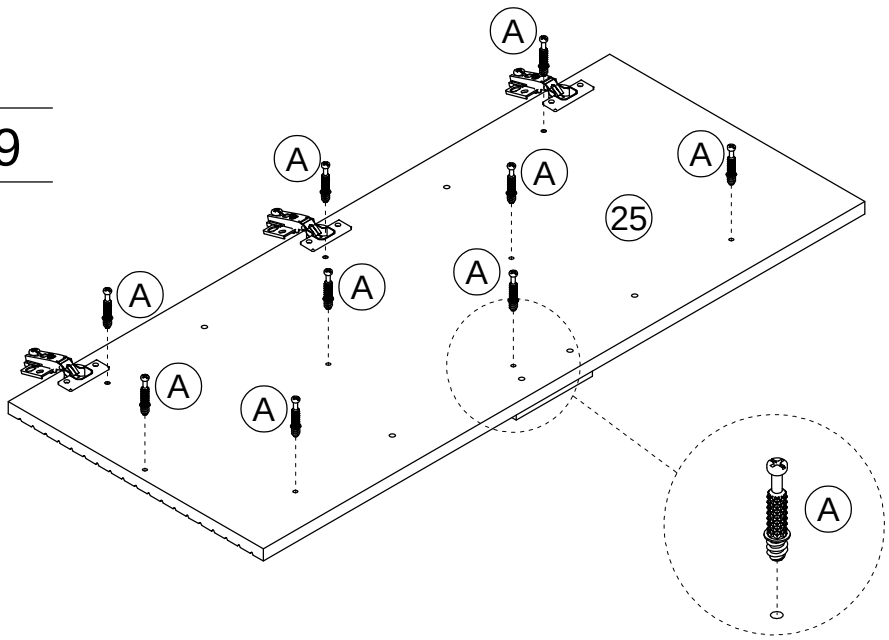


## STEP 34

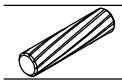

B x 4



C x 9

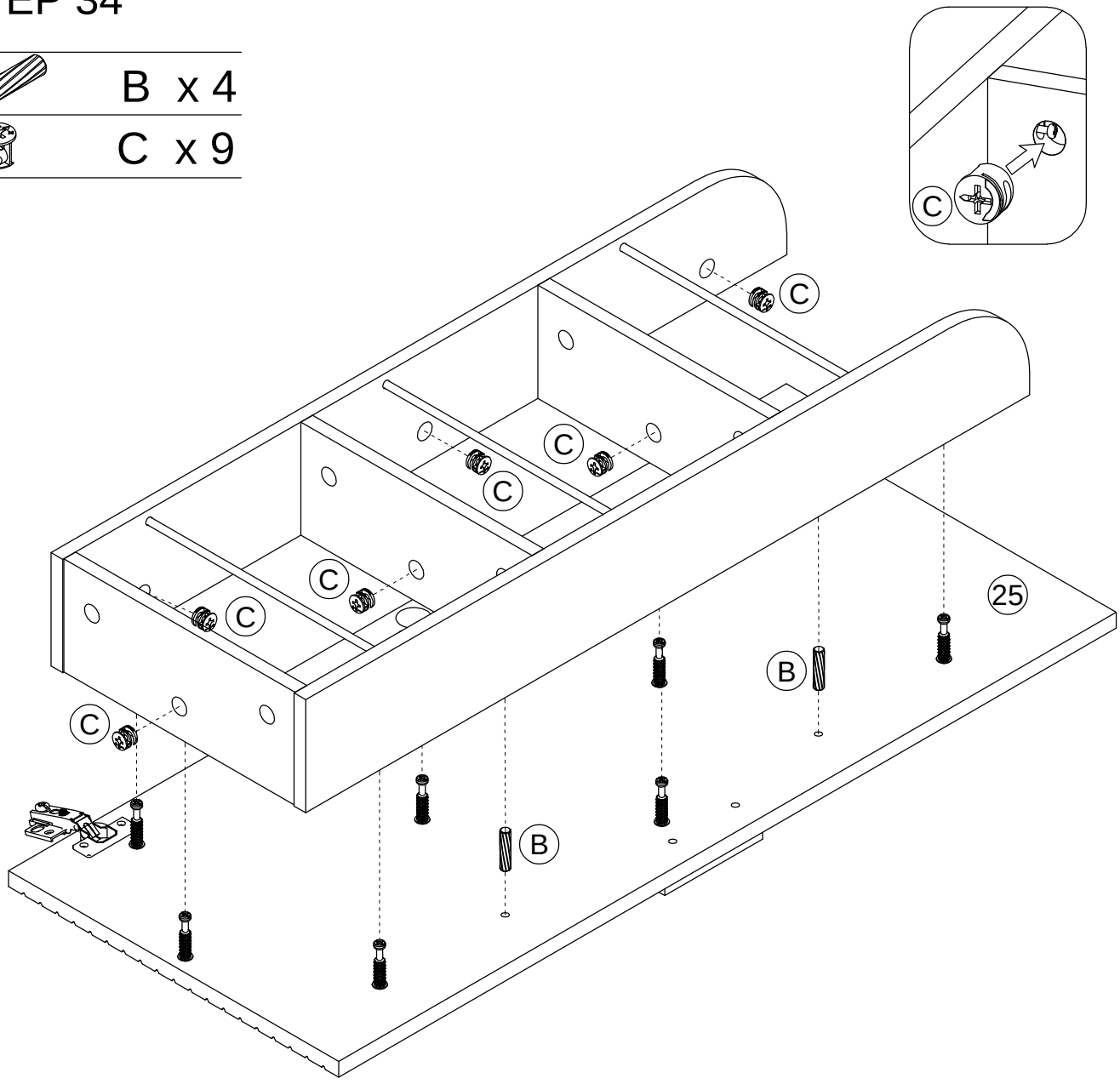

# STEP 35



H x 12

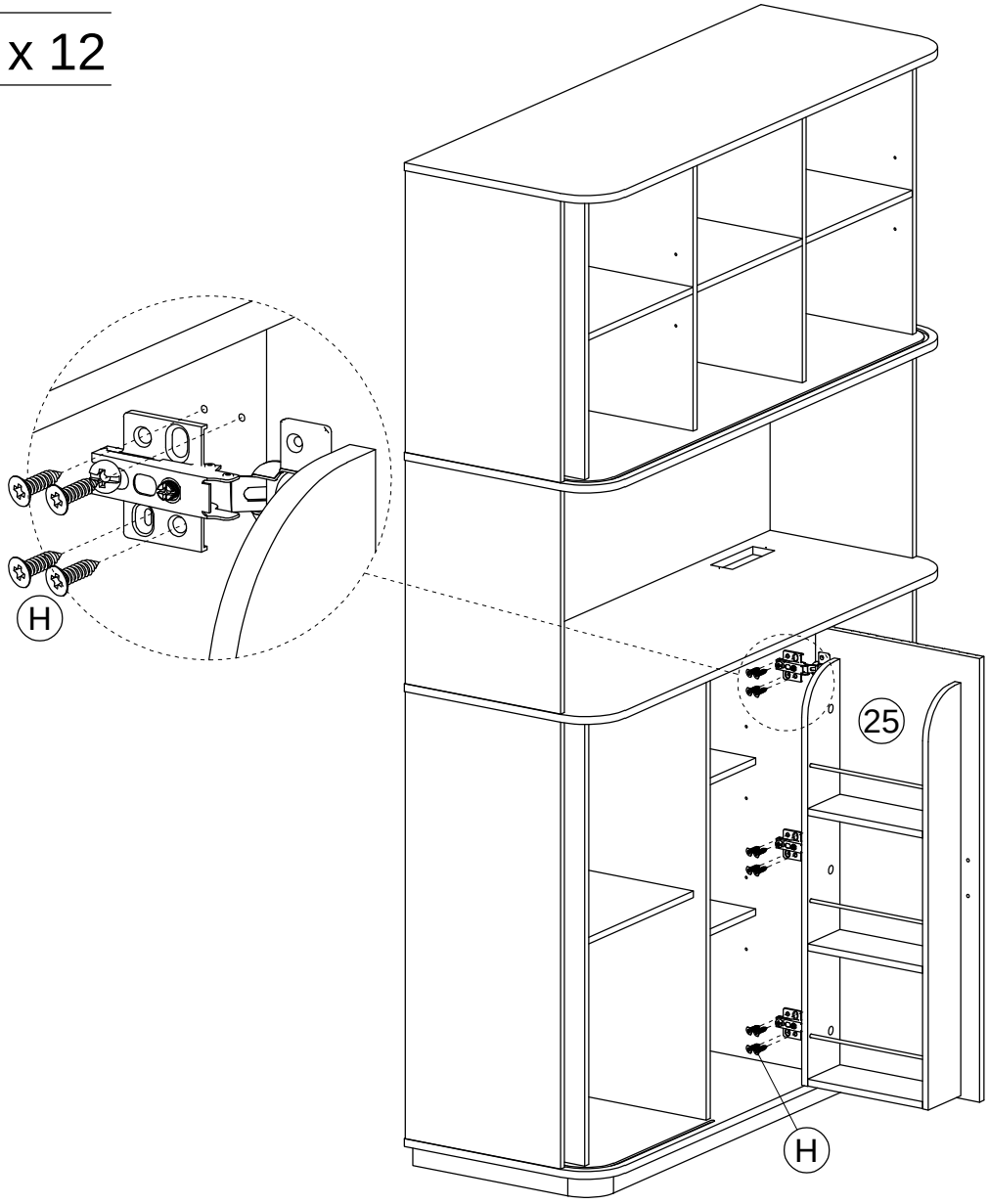


When the hinges are installed, you can refer to the pictures to adjust crevice of the doors till it's perfect

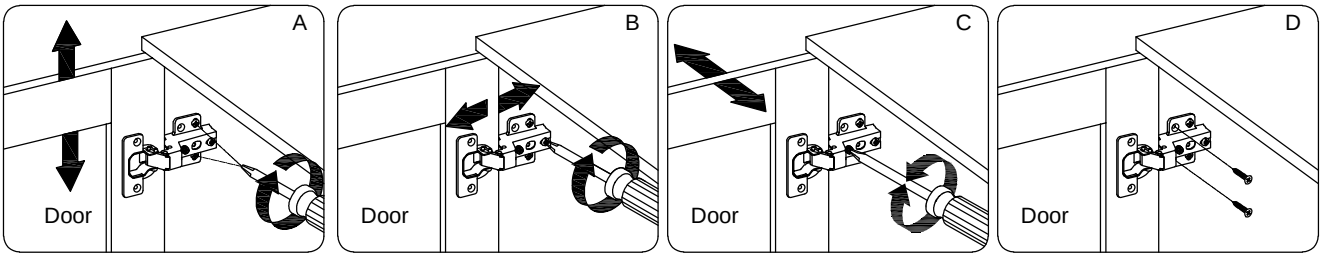


1. To adjust the doors up and down, please refer to step ( A )
2. To adjust the distance between the doors and side panels, please refer to ( B )
3. To adjust the gap between two doors, please refer to step ( C )
4. After the adjustment is finished, please tighten the screws, refer to step (D)

# STEP 36

R x 43




All cam lock holes on the front side are covered with paper stickers.

# STEP 37

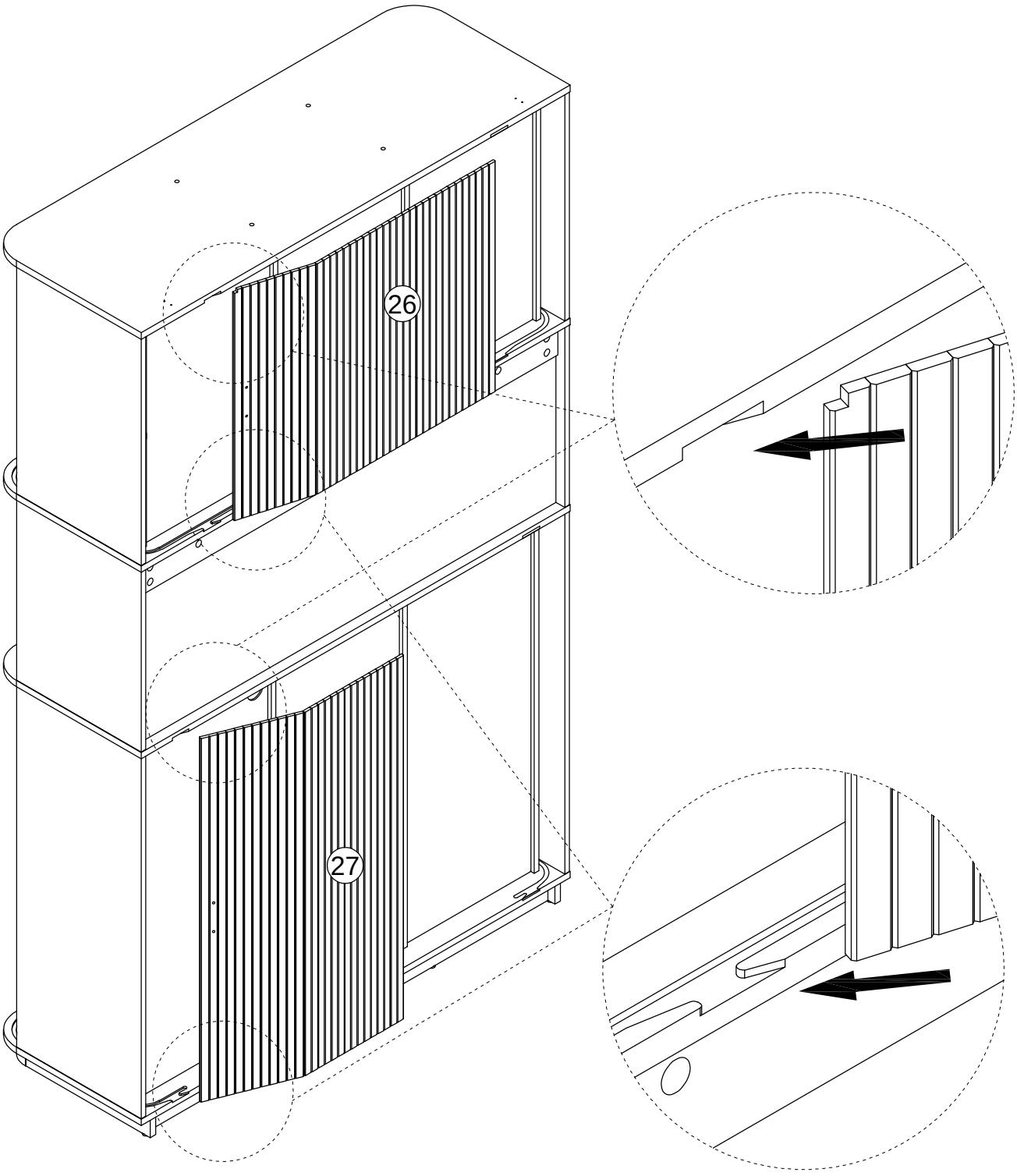

# STEP 38

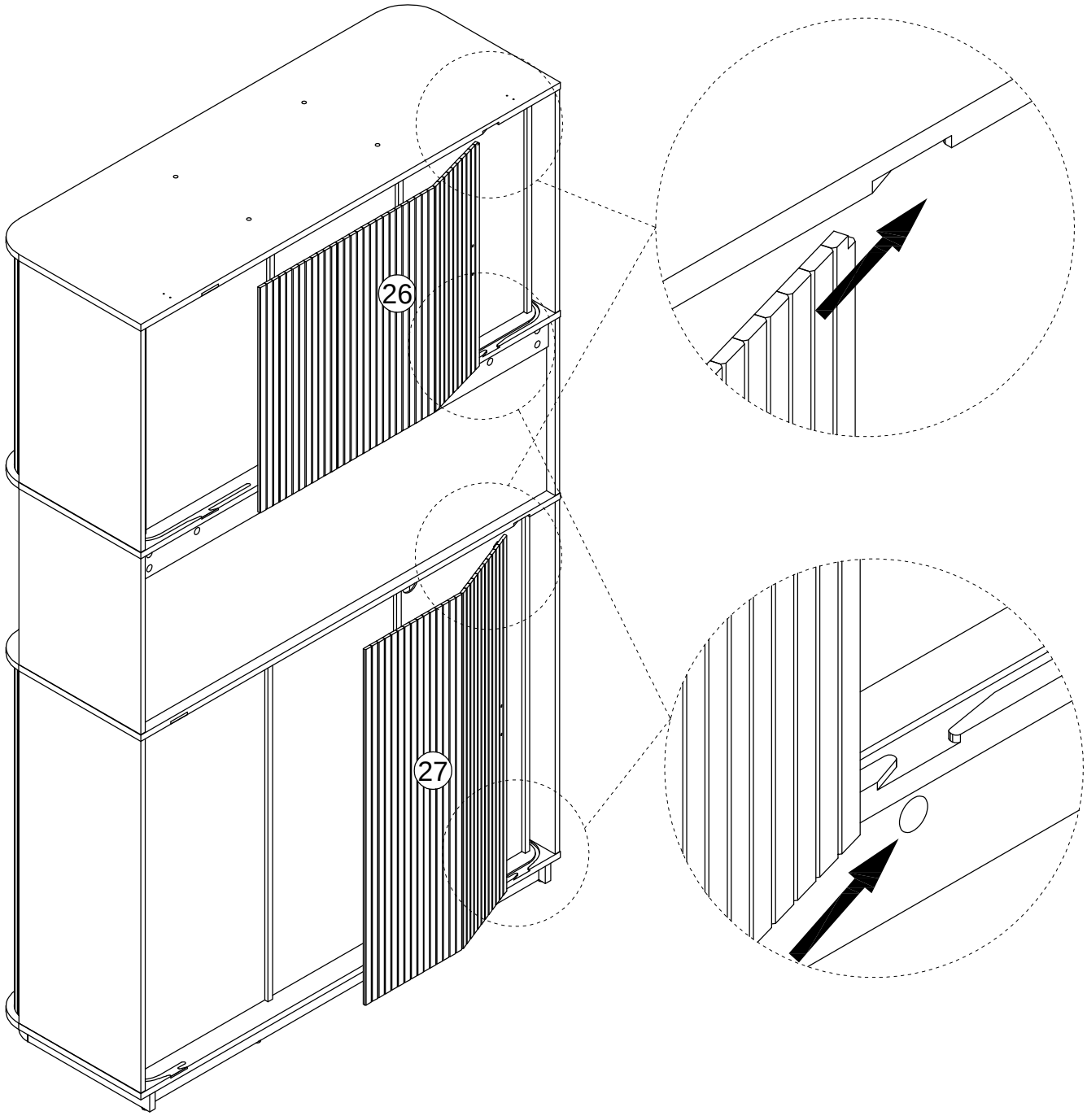

# STEP 39

| | |
|---|---|
|  | I x 4 |
|  | K x 8 |
|  | L x 2 |

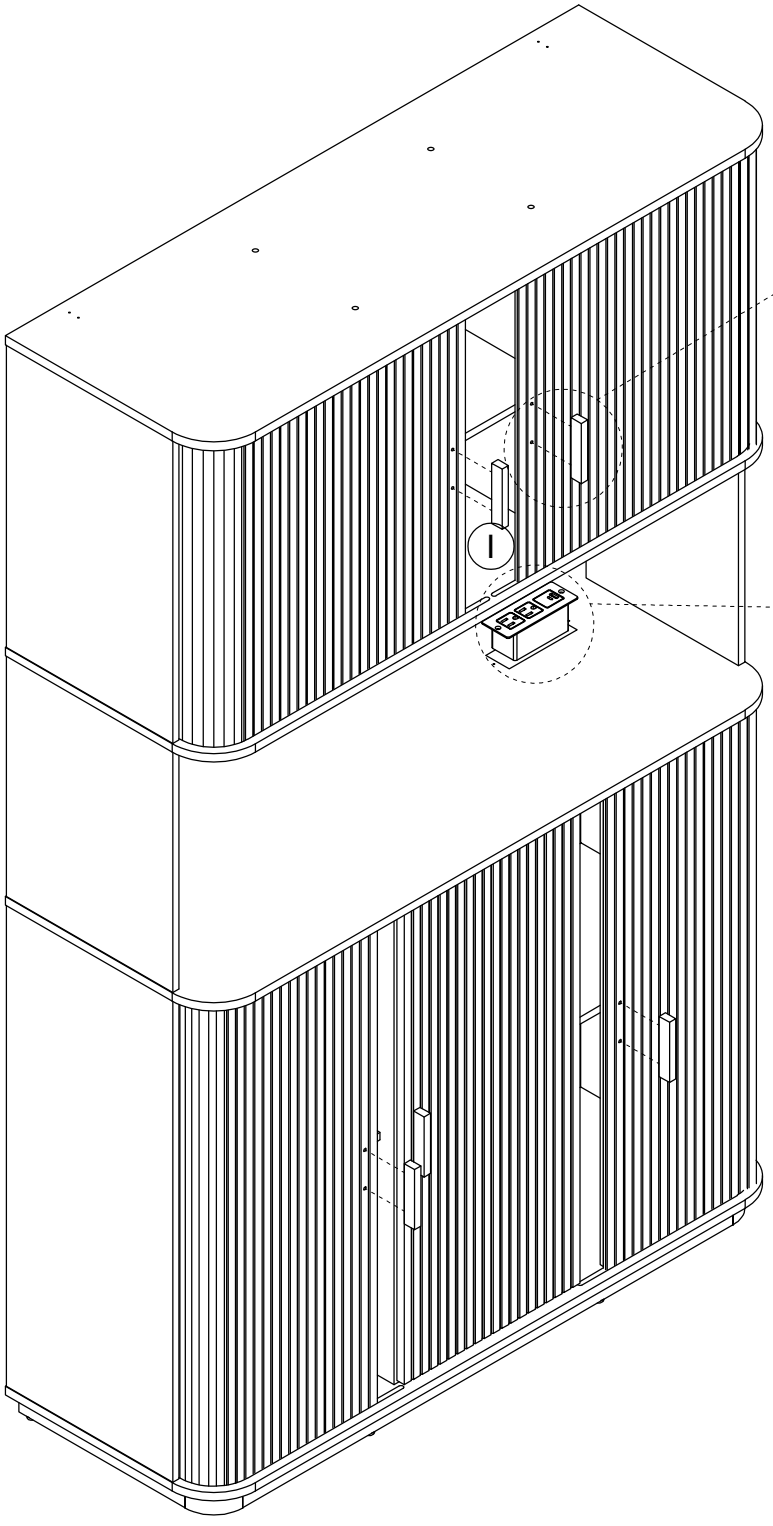


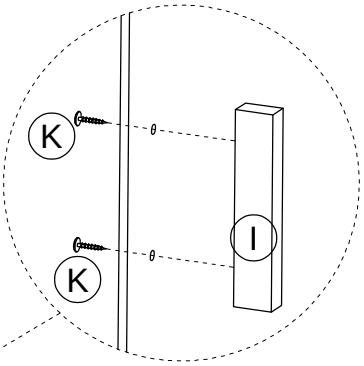


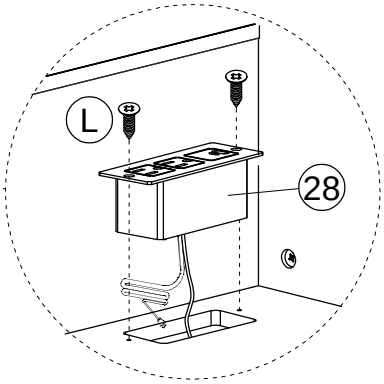

# STEP 40

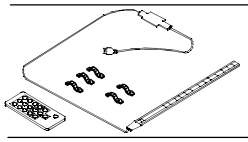

M x 1

the Led strip go through the hole of the panel (12) from back of the cabinet

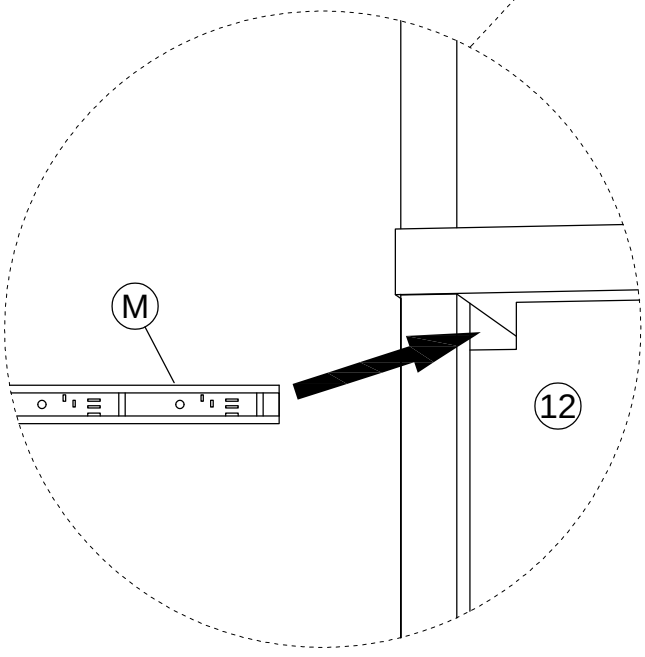


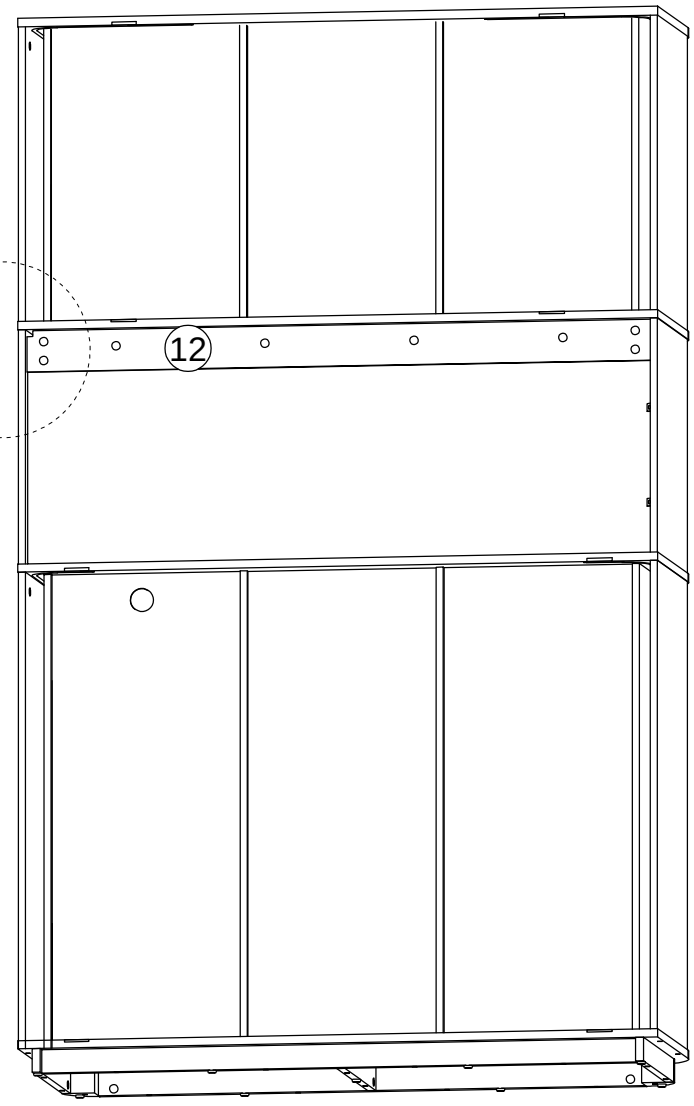

# STEP 41

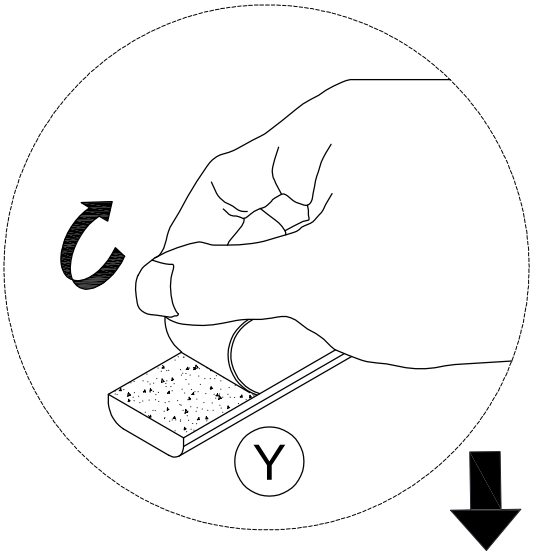


Stick the light tape to the boar

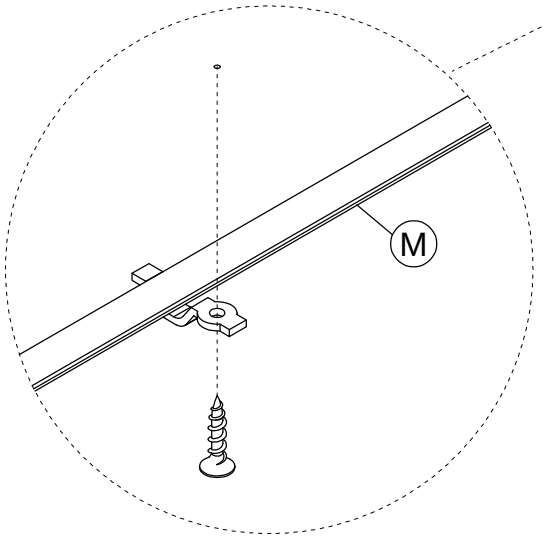


Screw it onto the board.

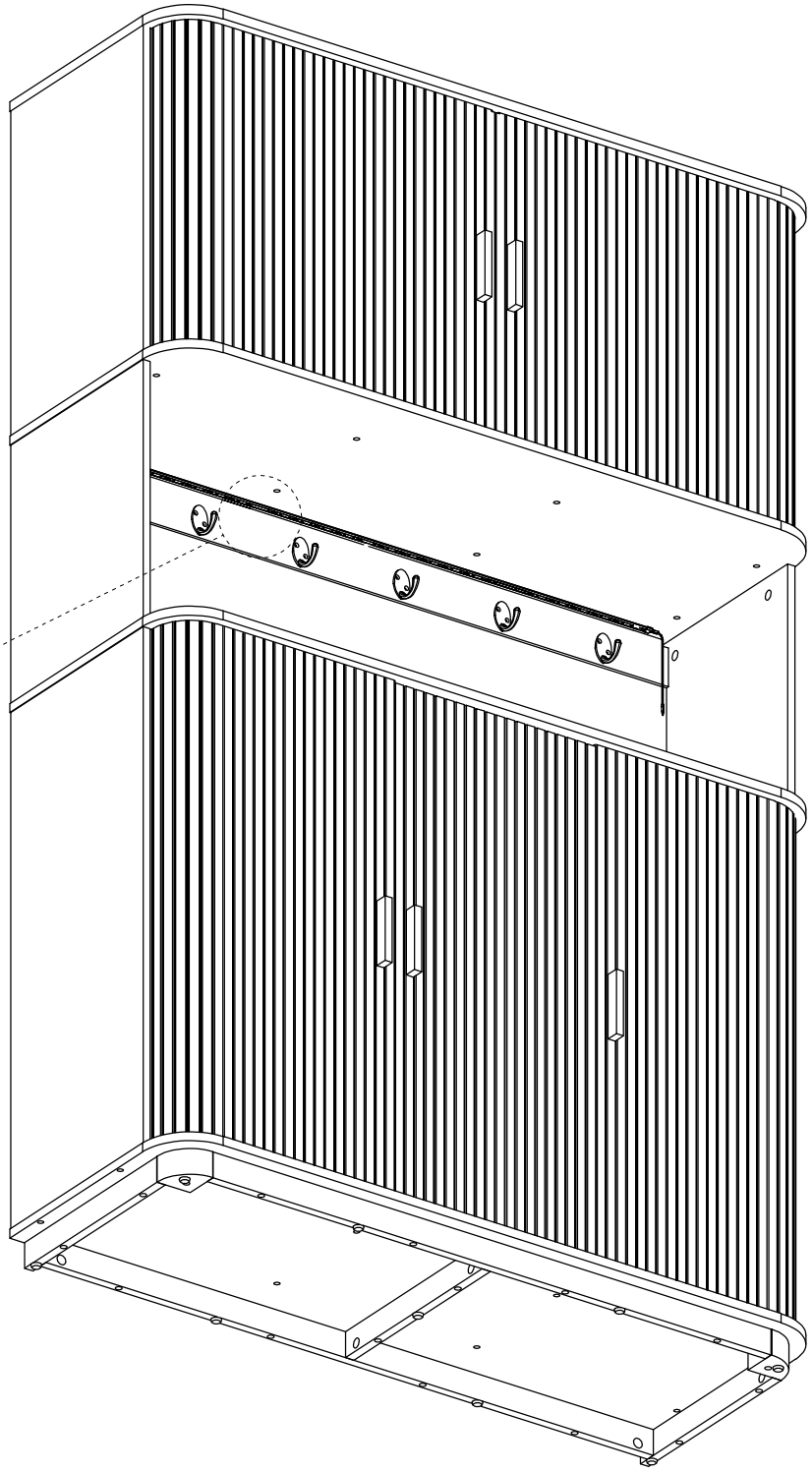

# STEP 42

| | |
|---|---|
| P | x 40 |
| N | x 40 |

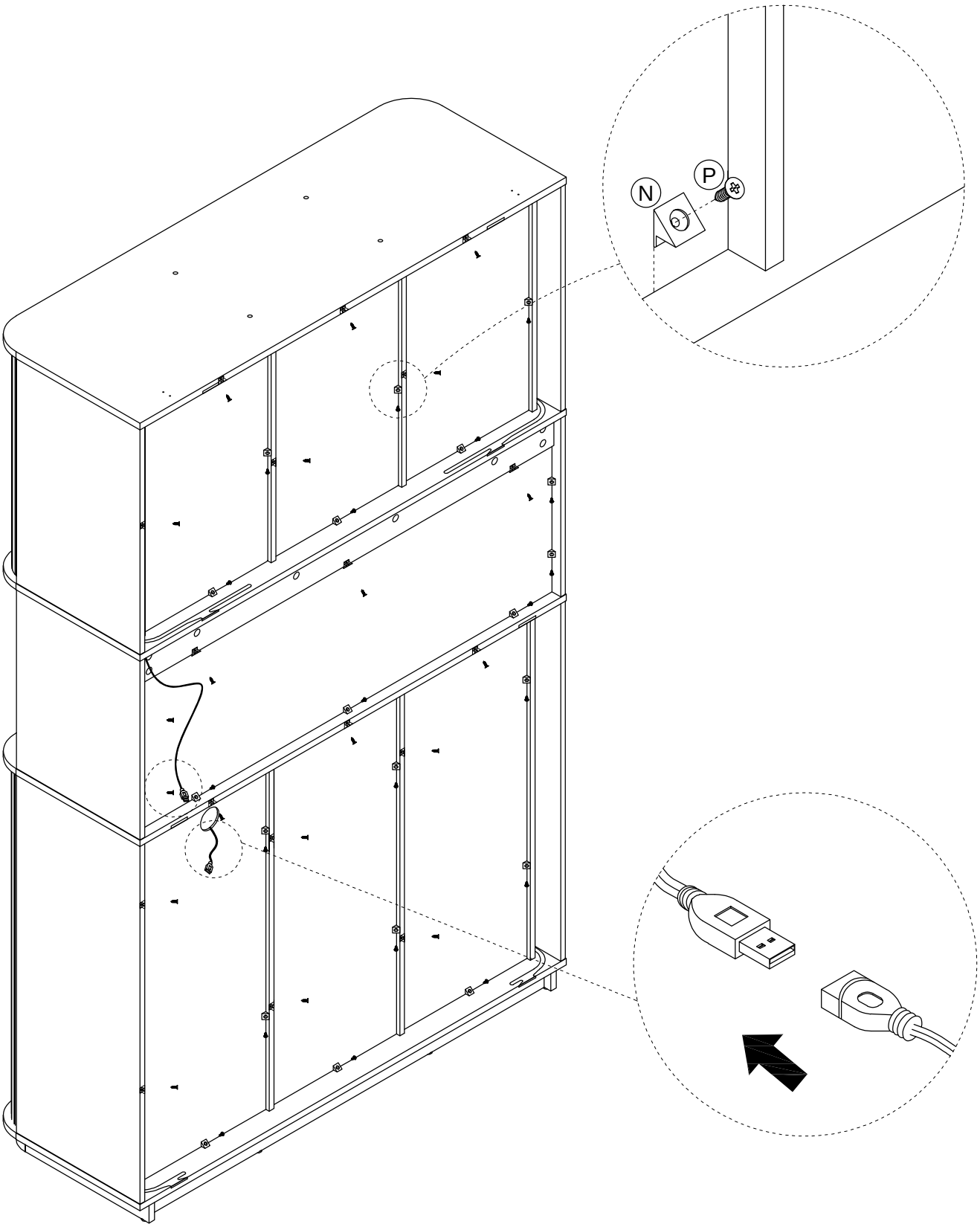

# STEP 43

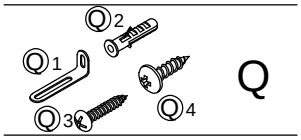





Step1: Determine the location of the anti-overturning on the wall and thenmark the position after confrming the product has been balanced.
Step 2: Drill the hole and then fixed the tacke (Q2) on the wall.
Step 3: Use screw (Q3) to fix the pat L (Q1) on the wall.

