ASSEMBLY INSTRUCTION

A 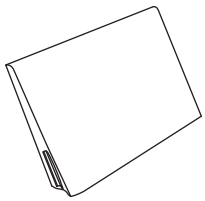 1pc	B 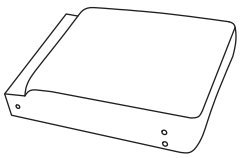 1pc	C 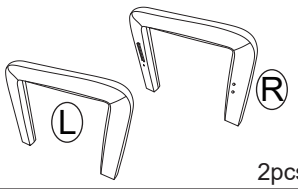 2pcs	D 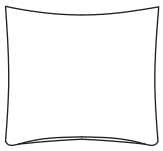 1pc
E  M6*45MM 6pcs	F  6pcs	G  1pc	

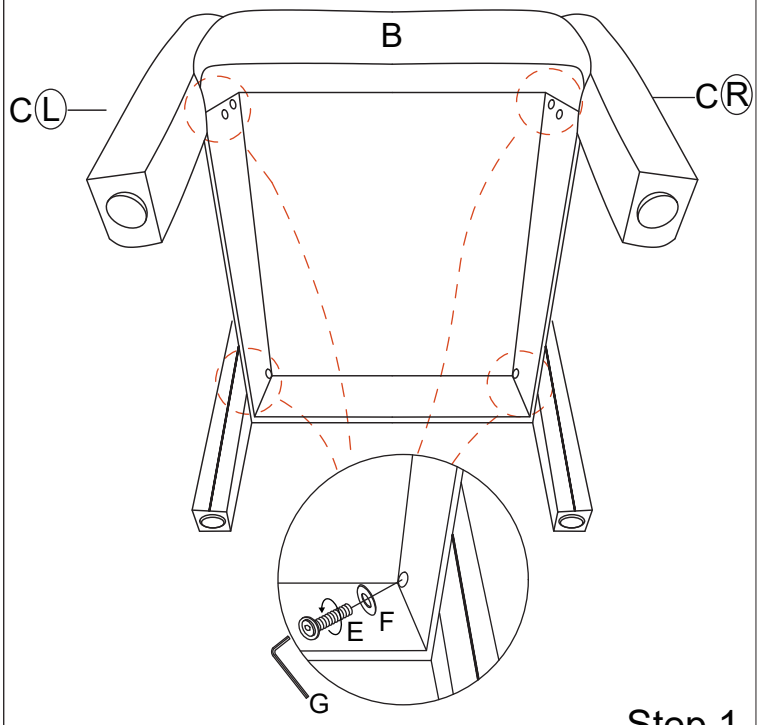

Step 1

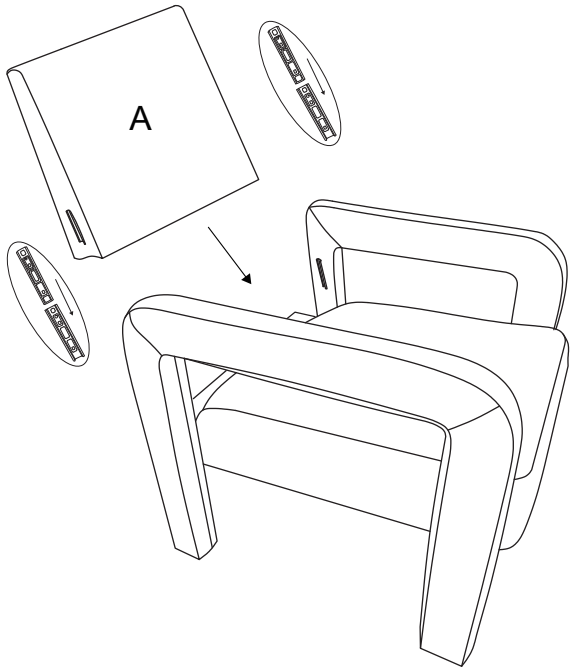

Step 2

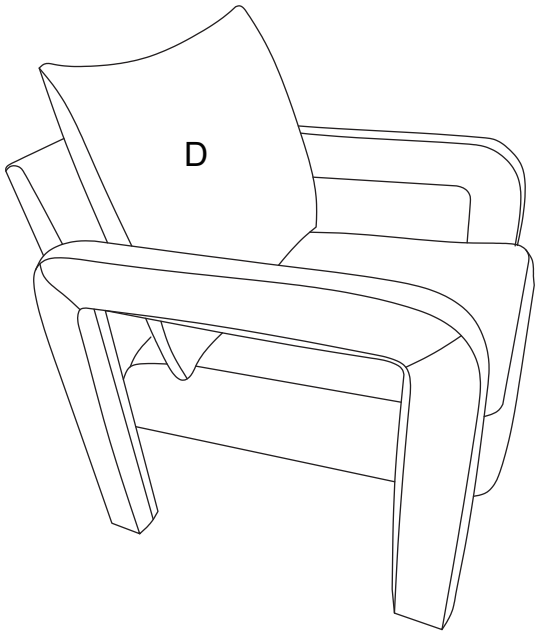

Step 3