90° three-legged electric height-adjustable office desk

User Manual



Attention

Ensure that the desk can be moved smoothly without any obstacles, and the length of all wires should be appropriate. Improper use of the product may result in serious property damage and personal safety risks. Please must follow and abide by the user manual.

Key point

Any user or when installing the desk, must carefully study this manual

Table of Contents

	Page
1. Safety Warning	2
2. Use	2
3. Setup and Installation	2
4. List of Components	3
5. Assembly Instruction Manual	4
6. Settings and Troubleshooting of the Hand Controller	8

1.Safety Warning

- Improper use of this product may result in property or personal injury.
- Before using the table, it is necessary to check the surroundings. If there are any immovable obstacles between the movement range of the table, it may cause restrictions on the body and property, thereby causing damage.
- Ensure the length of the power cord. When operating the table, the monitor, computer, speakers, and other items connected to the wires will be pulled down or broken.

2. Use

1.A DC brush motor is installed on the lifting table, designed for the drying work area. The table height is adjustable, allowing for the positioning at the height that best suits ergonomics. The table cannot be used in damp or high-humidity environments.

2.Do not move or lie under the table or crawl along it. Do not sit or stand on the table.

3.Children are not allowed to use it without the supervision of adults.

3. Setup and Installation

1.Once the assembly is completed, adjust the table legs to ensure the desktop is level and cannot be moved. Then connect a 110V or 220V power supply and be ready to use.

2.Check if there are any obstructions in the wires.

3.Choose a position for the table that is at a certain distance from the window and the house, so that a person won't be trapped by the table.

4.No items taller than 27.56 inches are allowed to be placed under the table.

5.After assembly, when moving the table, do not move it by lifting the tabletop.

6.When lifting the table, reinforce the connection between the table frame and the tabletop.

7.Reduce the height of the table to make it easier to grasp the table frame or remove the tabletop.

4. List of Components

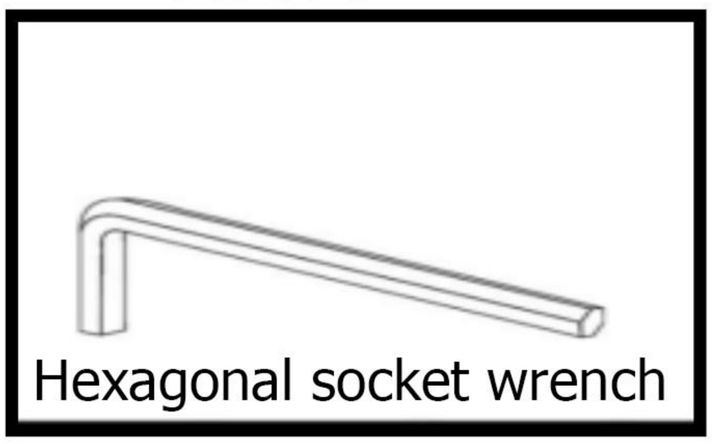

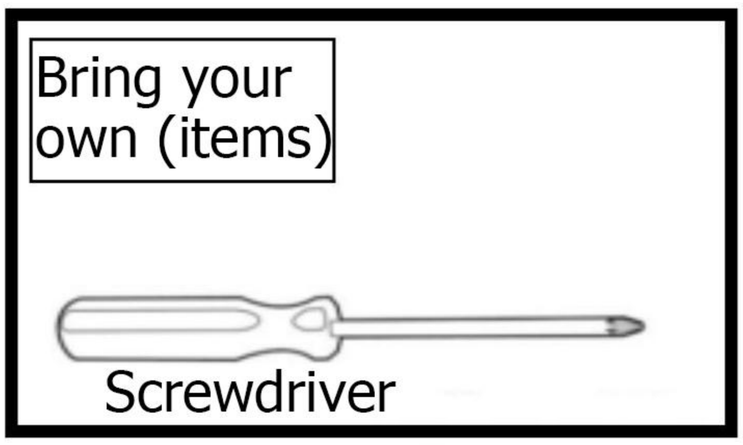

Accessories

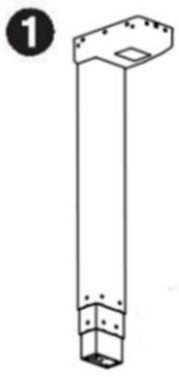
Single column

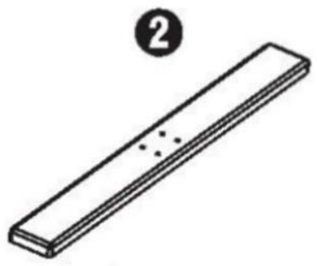
Base plate


Framework

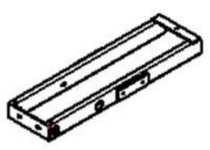
90° framework


Connecting rod

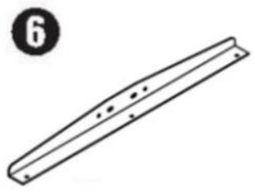
Connecting side panel

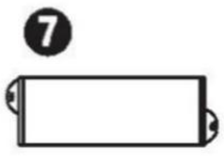
Controller

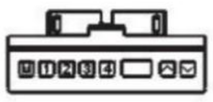
Remote control


Wheels

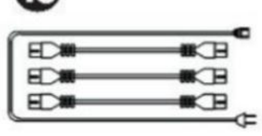
Power cord and connecting wire

Hardware components


M6x12 hexagonal screw


M6x8 sinker screws


M5x20 self-tapping cross-head screws


Wire card

Before handling the cartons and packaging, please first count all the accessories. Use soft pads or carpets at the assembly area to avoid damage. For convenience and safety, it is recommended to assemble the items by two people.

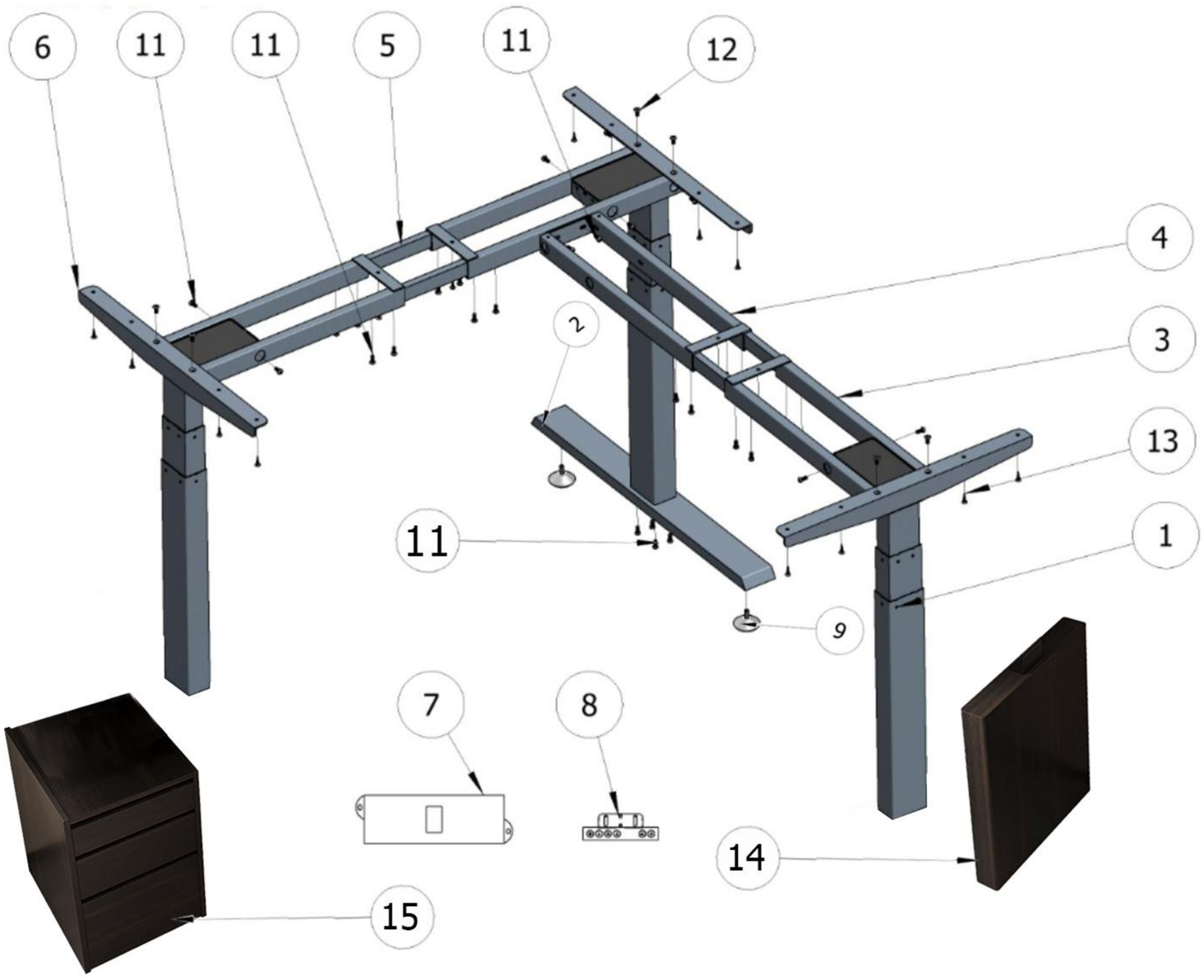

Code name	Name	Quantity
1	Single column	3
2	Base plate	1
3	Framework	3
4	90° framework	1
5	Connecting rod	4
6	Connecting side panel	3
7	Controller	1
8	Remote control	1
9	Wheels	6
11	M6x12 hexagonal screw	42
12	M6x8 sinker screws	6
13	M5x16 Cross Self-Tapping Screw	20
14	Leg	1
15	Cabinet	1

5. Assembly Instruction Manual

Remove the column with code 1 and the frame with code 3. Secure them with M6X12 hexagonal screws.

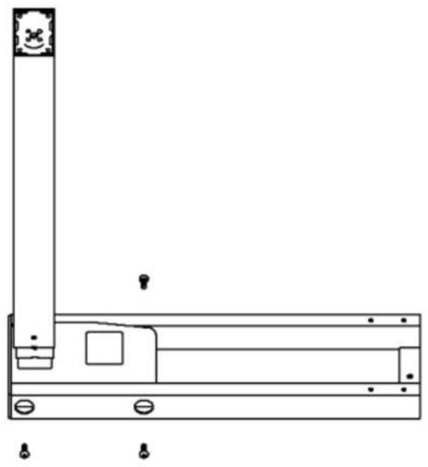

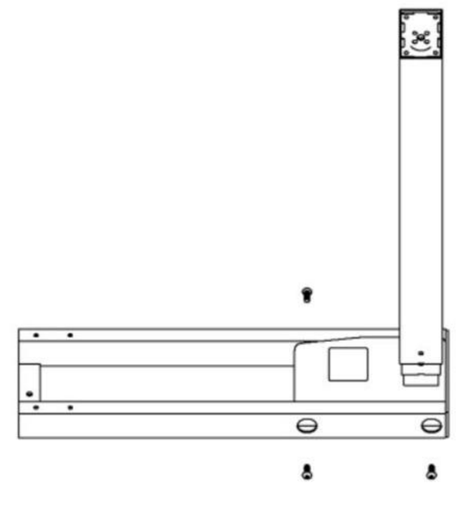

A. Take out two connecting rods numbered 4 as shown in the figure, and insert them between the 3rd rods. Note that the two connecting rods should be inserted with their openings facing inward.

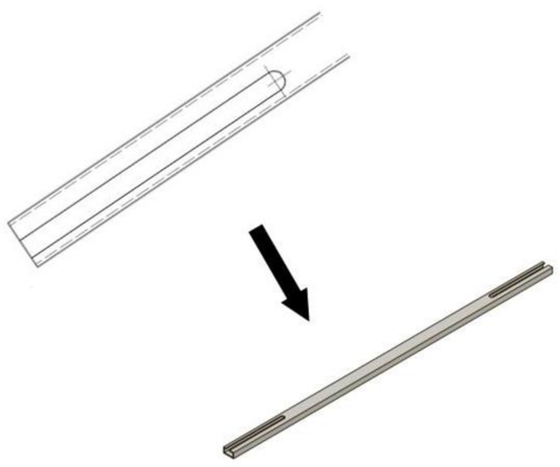

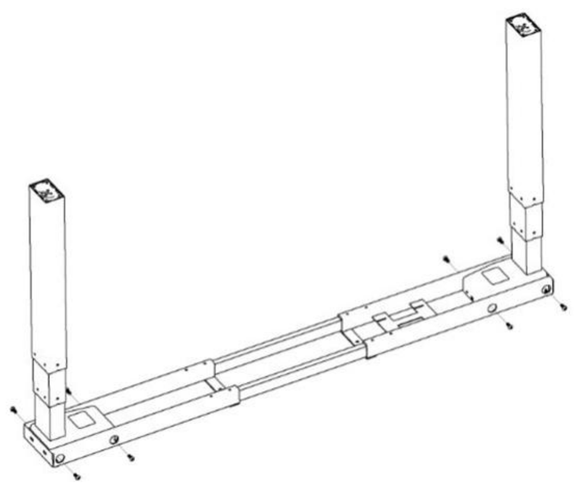

B. As shown above, in another frame



C. Connect the frames shown in B and D as shown in the following figure, and then tighten them with 2 11-number M6x12 internal hexagon screws (spring washers and spacers are required) as shown below.

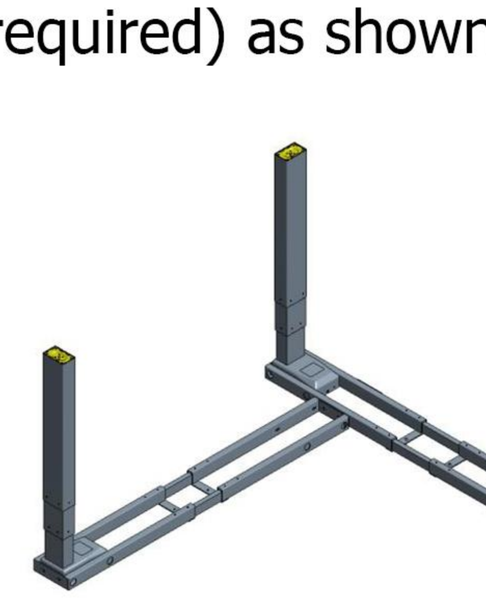

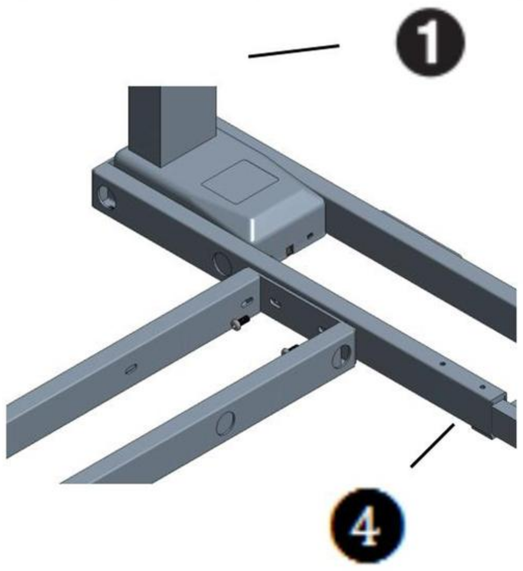

D. Install side panels on the two 3rd frame sections. Each side panel should be tightened with 2 12-number M6x8 countersunk screws.

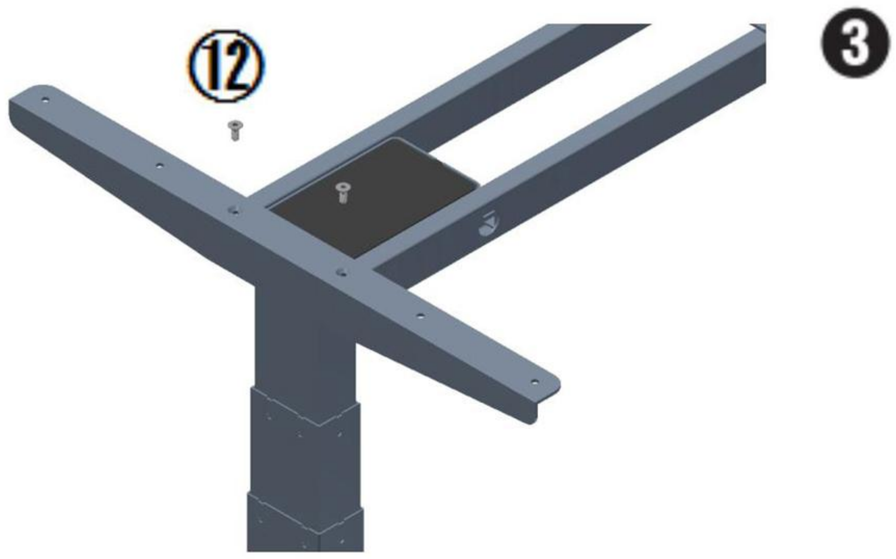

E. Stretch the length as indicated by the arrow. The length can be determined according to the tabletop. Finally, fix it with a 11-number M6x12 internal hexagonal screw.

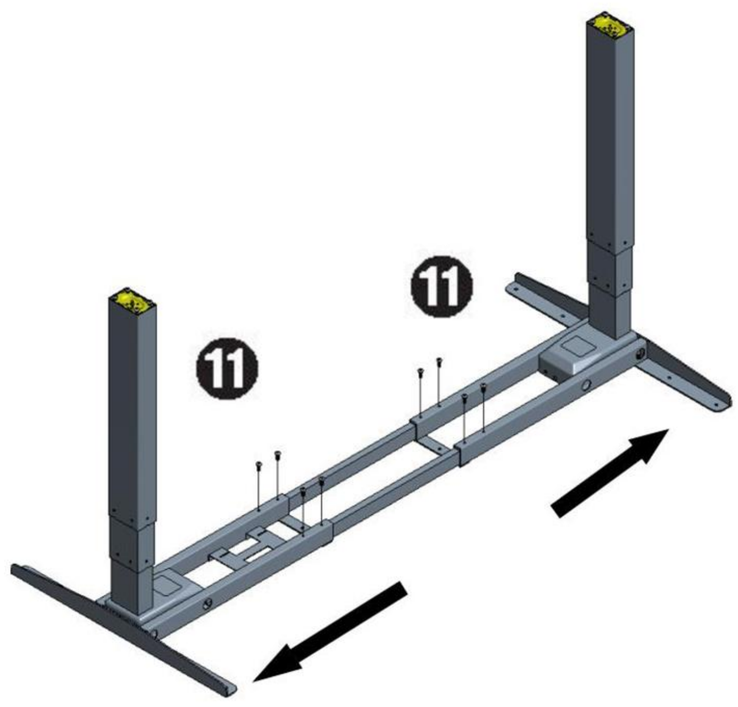

F. Install the 2nd anchor bolt on the 3rd 1st single column, along with the 14th leg and the 15th cabinet. As shown in the figure below, attach the 9th type casters and tighten them with the 11th type M6x12 hex socket screws.

Installation completed as follows

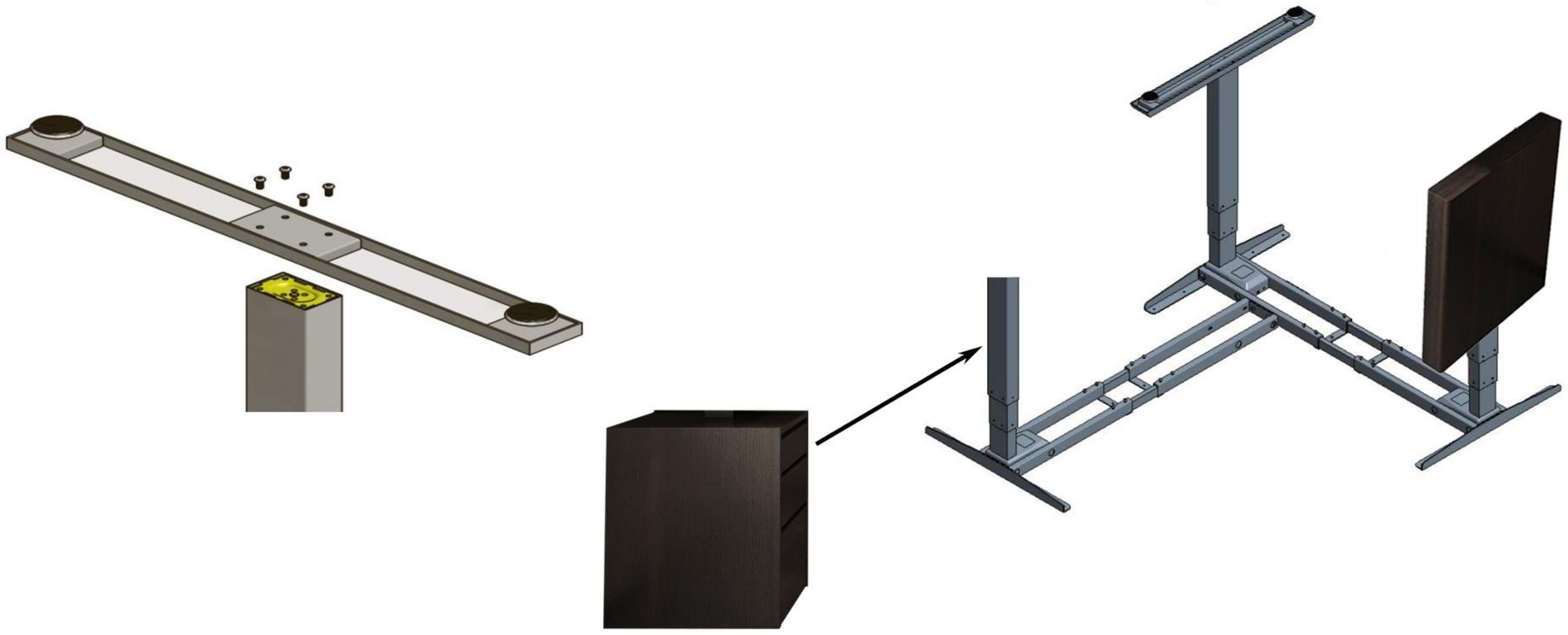

G. Install the tabletop panel, the hand controller, and the controller. The positions can be adjusted according to personal preference. Secure them with M5x16 self-tapping screws.



H. Connect the wires as shown in the diagram below, and use wire clips to secure the connections so that the wires do not get damaged.

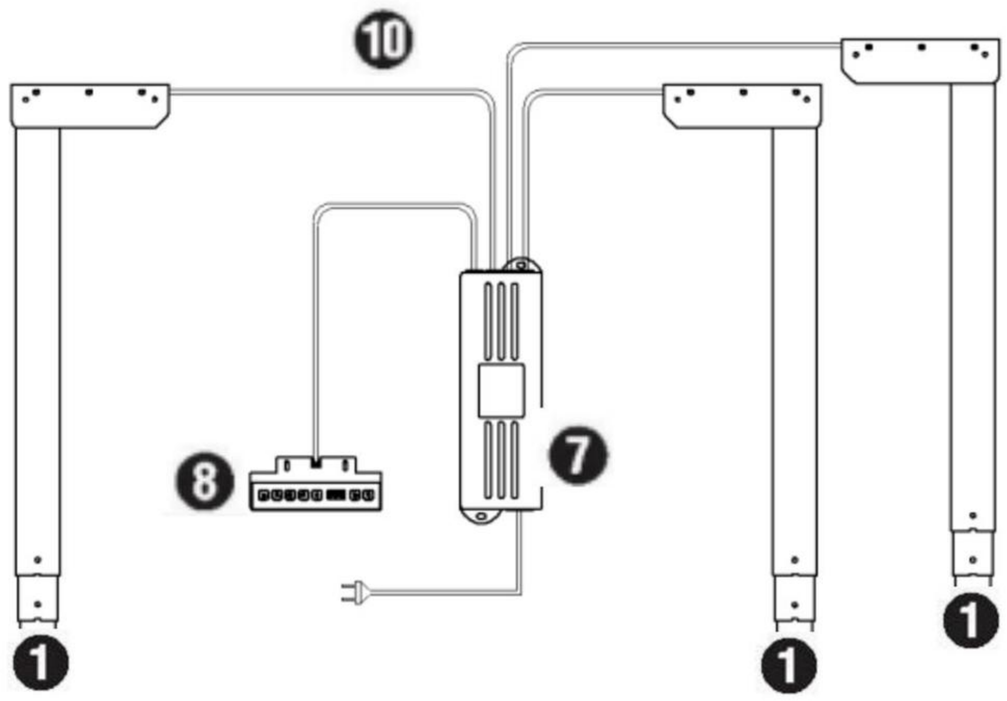

6. Settings and Troubleshooting of the Hand Controller

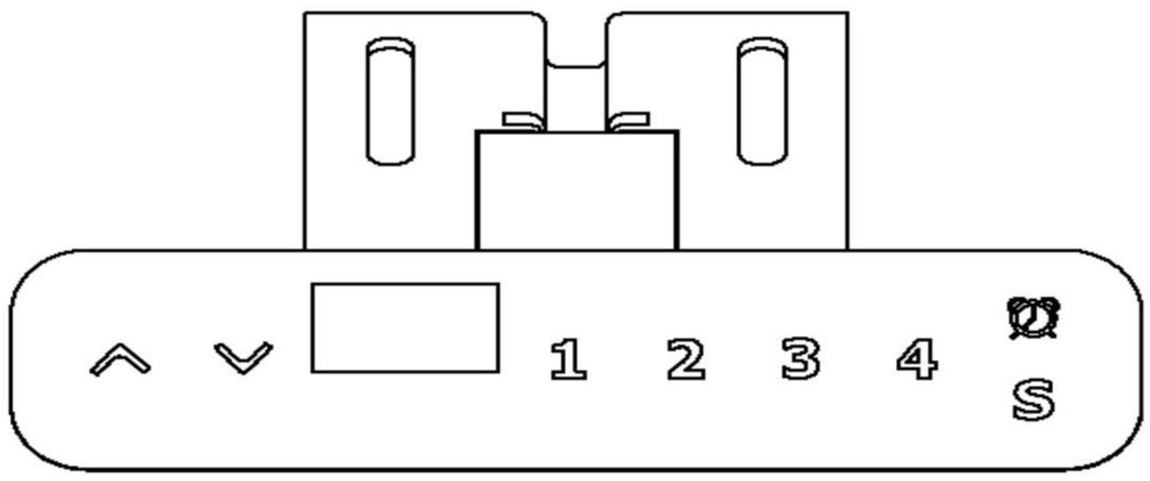

I. The lifting and lowering of the table

1.Simply hold down the ▲ key or the ▼ key to control the elevation of the desk, either to raise or lower it.

2.Press the ▲ key to control the ascent of the lifting table. You can see the increase in height (indicated by the numbers) on the three-digit display screen; press the ▼ key to control the descent of the lifting table. You can see the decrease in height (indicated by the numbers) on the three-digit display screen.

II. The Activation and Setting of Memory Levels

1.Remote control

On the height display interface, by pressing the number keys, the corresponding height can be called up. The height-adjustable table will automatically move to the corresponding position.

On the height display interface, briefly press the "s" key. The height value will start to flash and display. At this point, by pressing the numeric keys (1, 2, 3, 4), you can record the current height to the corresponding position.

III. Screen-Sleep Wake-Up

1.Remote control

The hand controller's screen goes dark after power off. Pressing any key has no response, which can prevent accidental operation. At this time, long-pressing the S key will light up the digital tube.

IV. Trip Reset

1.Single motor stroke reset:

When in the "E10, E20" alarm state or after reaching the lowest height position, long press the▼ key for 3 seconds. The display will show "RES (Reset)". Then release the key. The lifting table will start to descend to the bottom and rebound to a certain height. Once the reset is completed, the lowest height will be displayed.

2. Multi-motor travel reset:

When in the "E10, E20, E60" alarm state or after reaching the lowest height position, long press the ▼ key for 3 seconds, display "RES (Reset)" and then release. The lifting table will start to descend to the bottom and rebound to a certain height. The reset is completed and the lowest height is displayed.

V. Sitting for Long Periods Reminder

1.The activation, deactivation and setting of the reminder duration for the prolonged sitting alert can be done by pressing the prolonged sitting alert button:

Press the "Sedentary Reminder 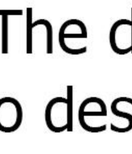" button once to enter the settings. After entering, the handle will show as "OFF". At this point, press the " ▲/▼ " key to adjust the duration of the sedentary reminder. Each key press changes the duration by 0.5 hours. The adjustable duration range is from 0.0 to 9.5 hours. After adjusting to the appropriate duration, press the " S " key to turn on the sedentary reminder with the current setting. When the set duration is 0.0, it shows as "OFF", meaning the sedentary reminder is turned off.

2. The long-sitting reminder function is disabled by default when the controller is manufactured.

3. When entering the default setting for the long-term sitting reminder for the first time, the display shows "OFF".

4. If the long sitting reminder function has been enabled, the default setting value from the last time will be remembered. The memory is valid even after power loss.

5. When the height of the lifting table exceeds the preset duration for prolonged sitting, a prolonged sitting reminder will be triggered.

6. Once the prolonged sitting alert is triggered, the buzzer will make 9 consecutive short beeps. The alert will be triggered once and then turned off.

8. Once the long-sitting reminder function is enabled, the third decimal point on the display will light up when the screen is off, indicating that the function is activated. When the long-sitting reminder function is turned off, there will be no decimal point indication.

9. After each reminder, if you want to activate this function again, you need to follow the activation steps to do so.

Vl. Child Lock

1.To activate the child lock: First, press and hold the "S" key, then press the "Down" key. Keep holding until the display shows "LOC", indicating that the lock has been activated successfully.

2. Turn off the child lock: Press and hold the "S" key, then press the "Down" key. Keep holding it for 5 seconds. The display will show (Current height displayed), indicating that the lock has been turned off successfully.