Olivia's little World

18" Doll Fancy Closet

With 3 Hangers and 1 Cubby

 # TD- 0210

Assembly Instruction

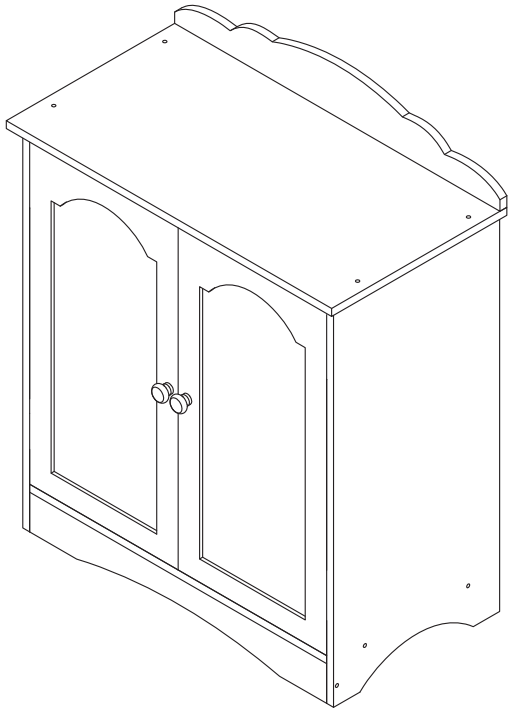

USA 1-800-935-3959
Mon - Fri 9:00am ~ 4:30pm EST
support@teamson.com

EU +44 (0) 1952-916050
Mon - Thu 9:00am ~ 5:00pm GMT
Friday 9:00am ~ 4:00pm GMT
support@teamson.co.uk

WARNING

CHOKING HAZARD-small parts
Not for children under 3yrs
The toy is to be assembled by an adult.

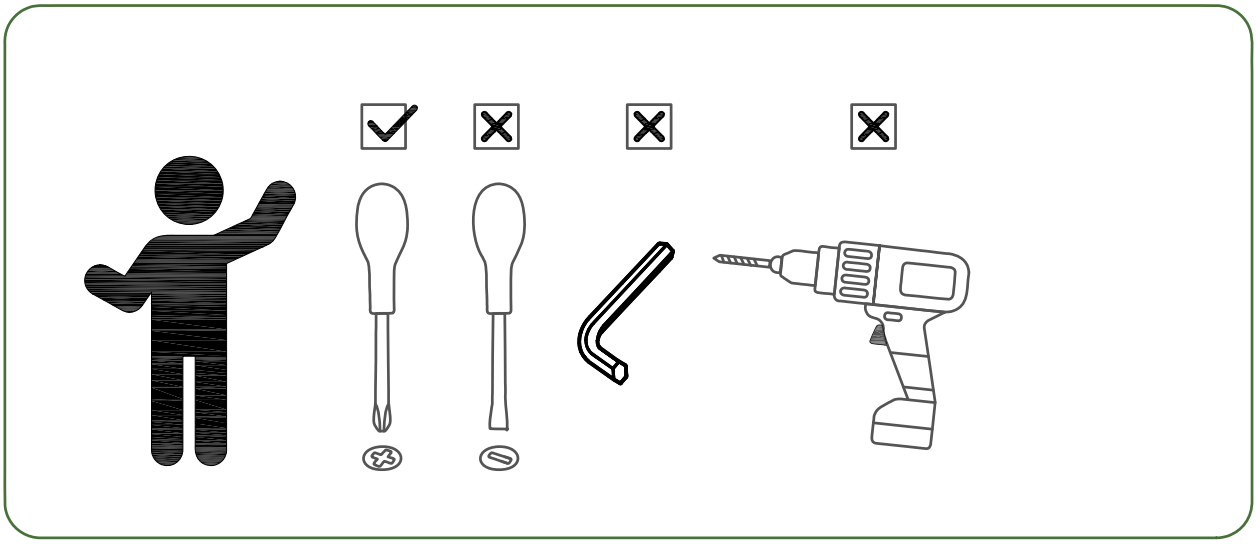

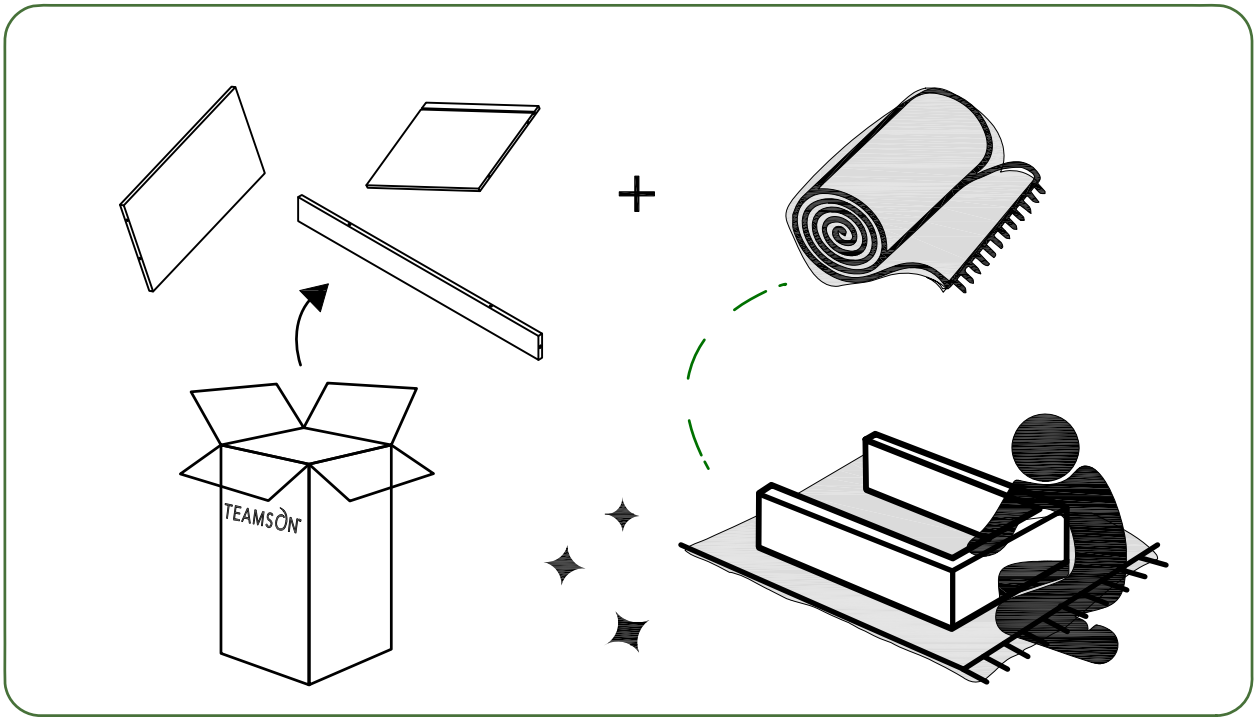

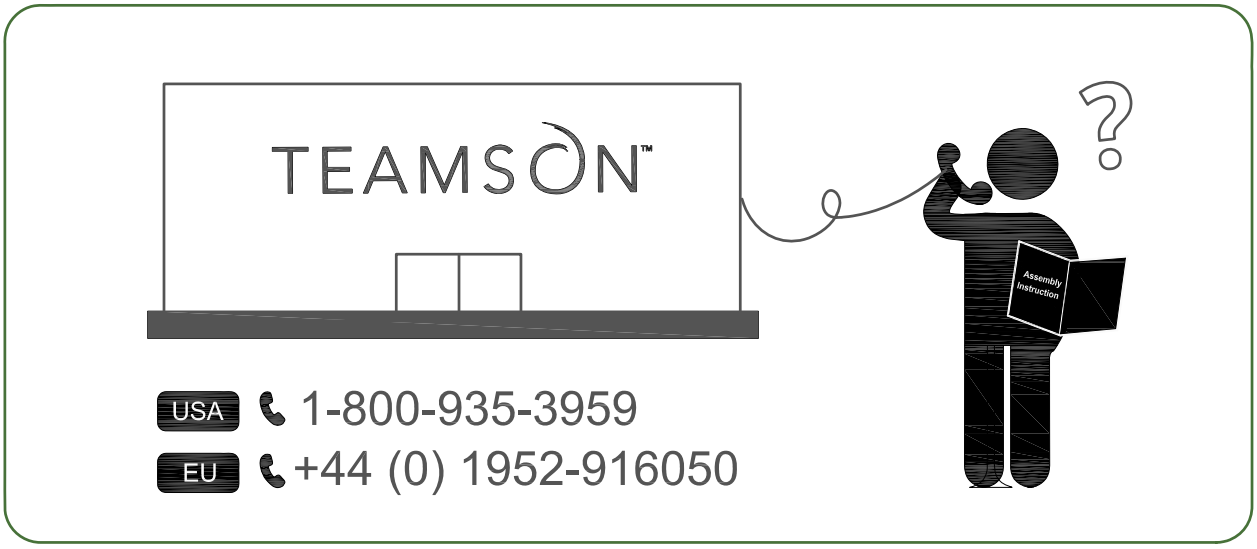

Made in China

Exploded Drawing

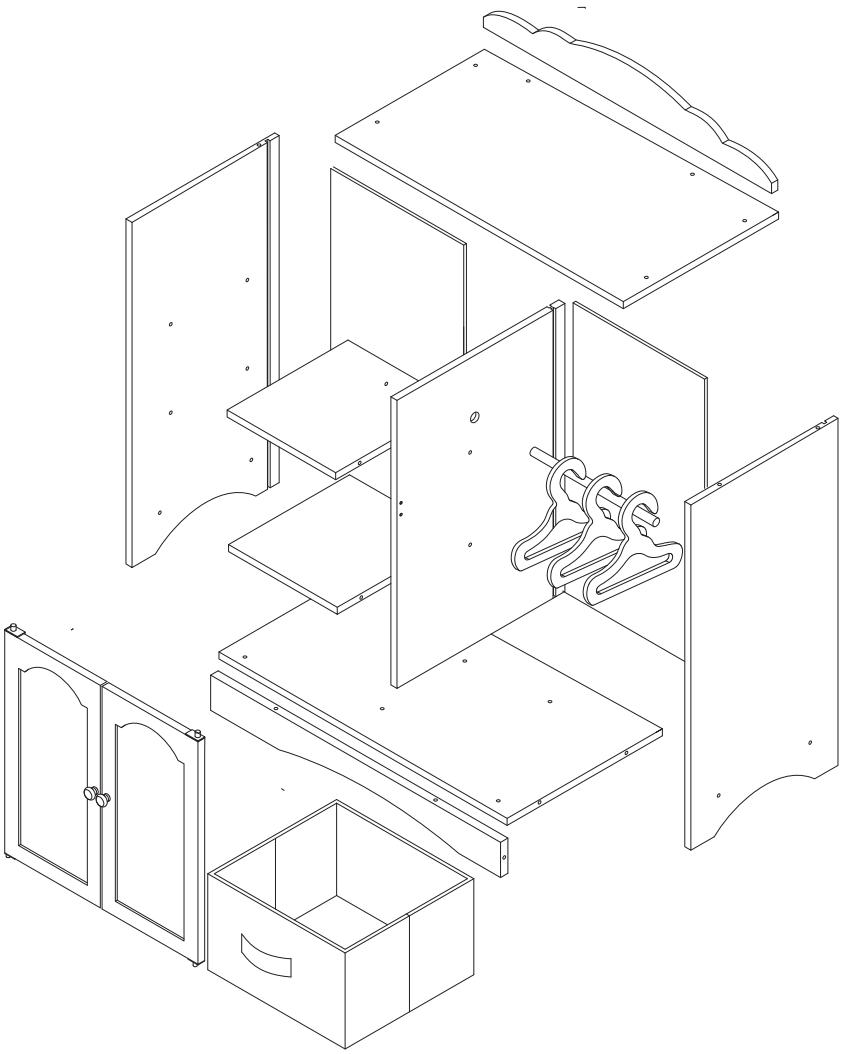

Product Parts

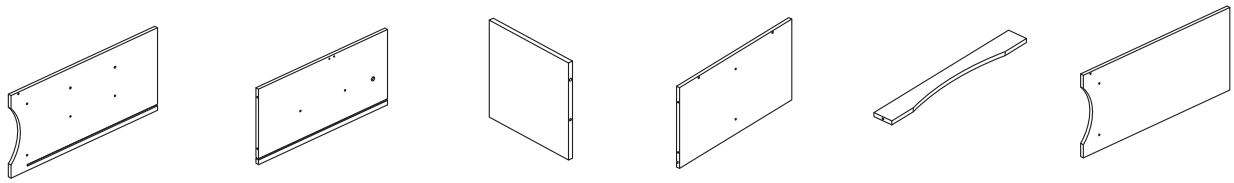

A B C D E F

2 PCS

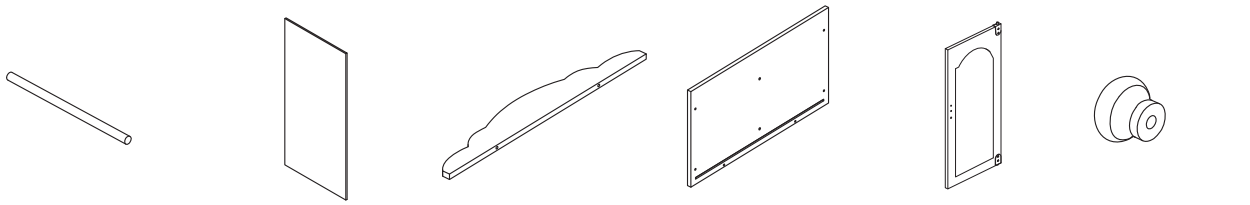

G H I J K L 2 PCS

2 PCS

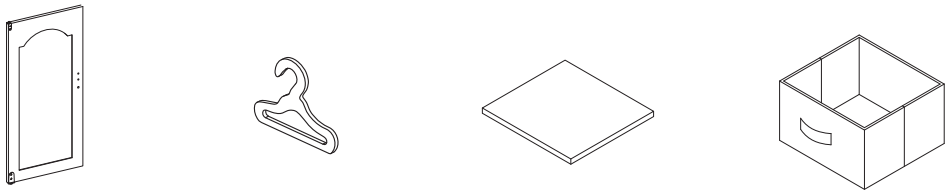

M N O P

3 PCS

Hardware Parts

1 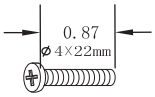

18 PCS

2 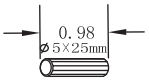

8 PCS

3 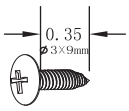

8 PCS

4
2 PCS

5
2 PCS

6 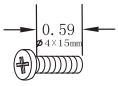

2 PCS

Step 1

3 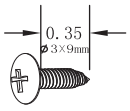

4 PCS

5 2 PCS

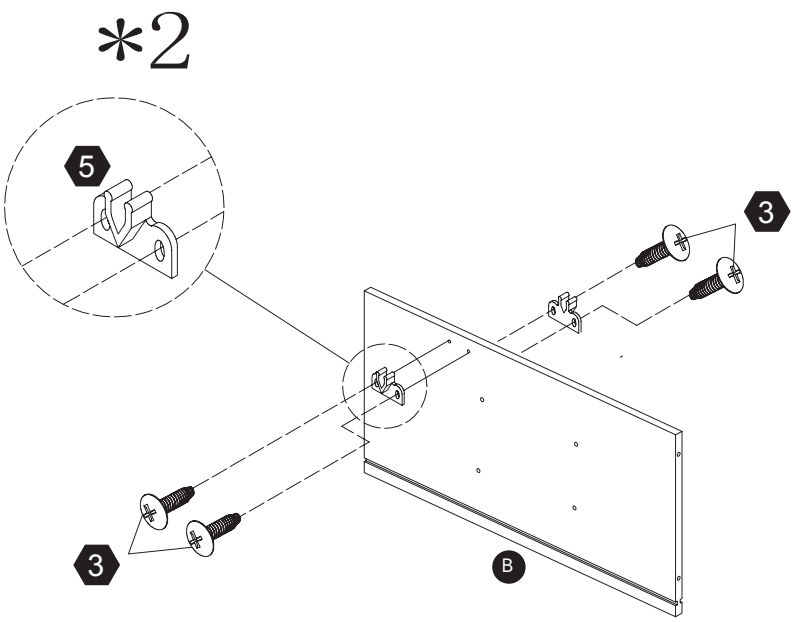

Step 2

1 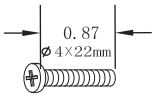

4 PCS

2 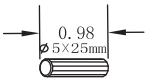

4 PCS

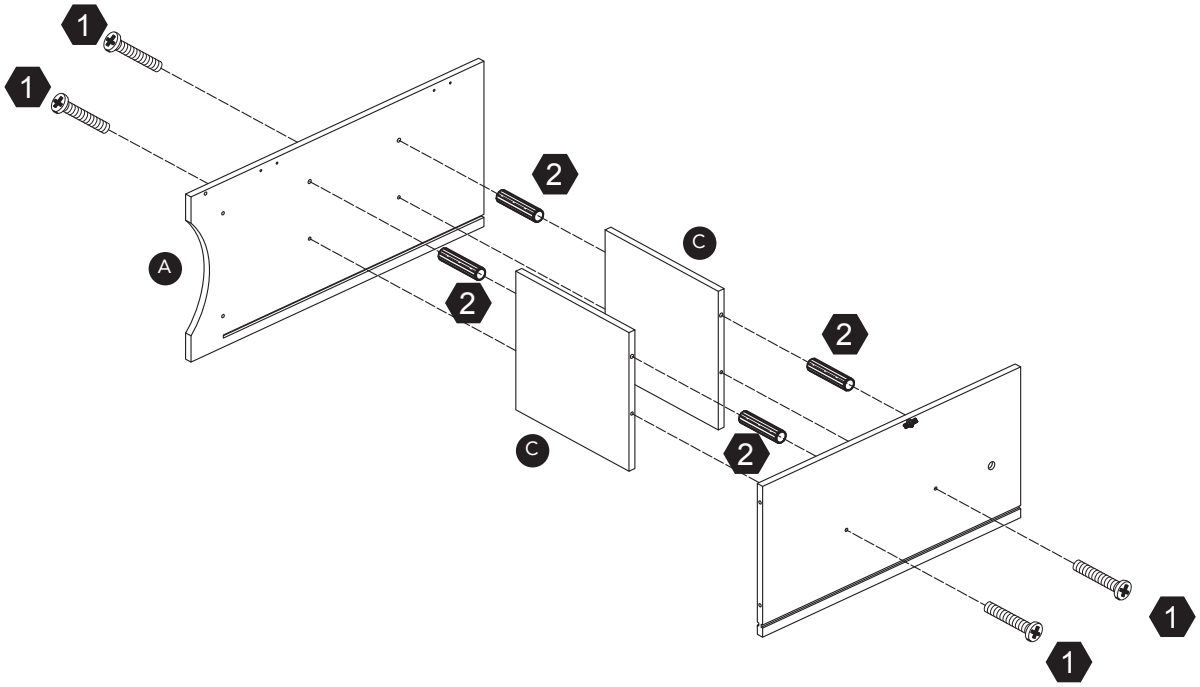

Step 3

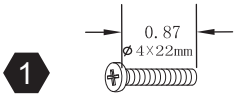

4 PCS

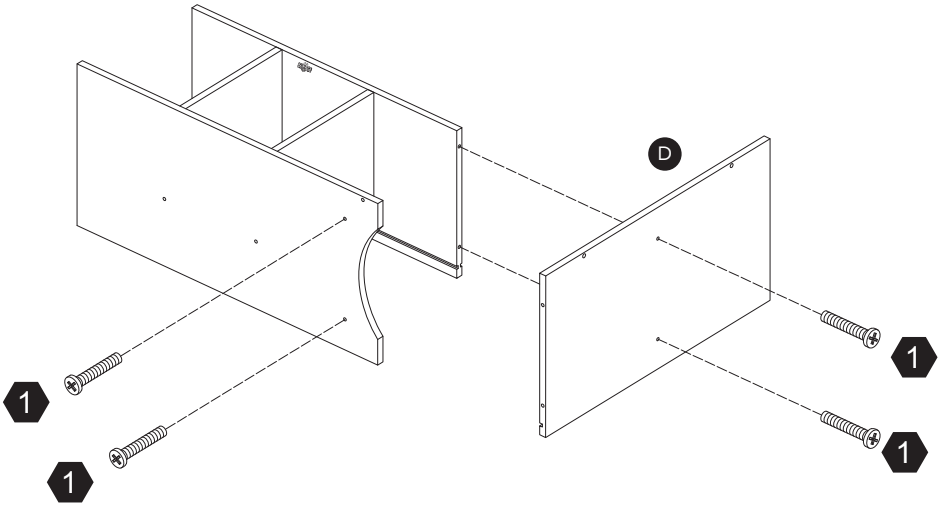

Step 4

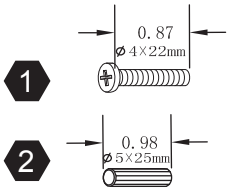

1 PC

2 PCS

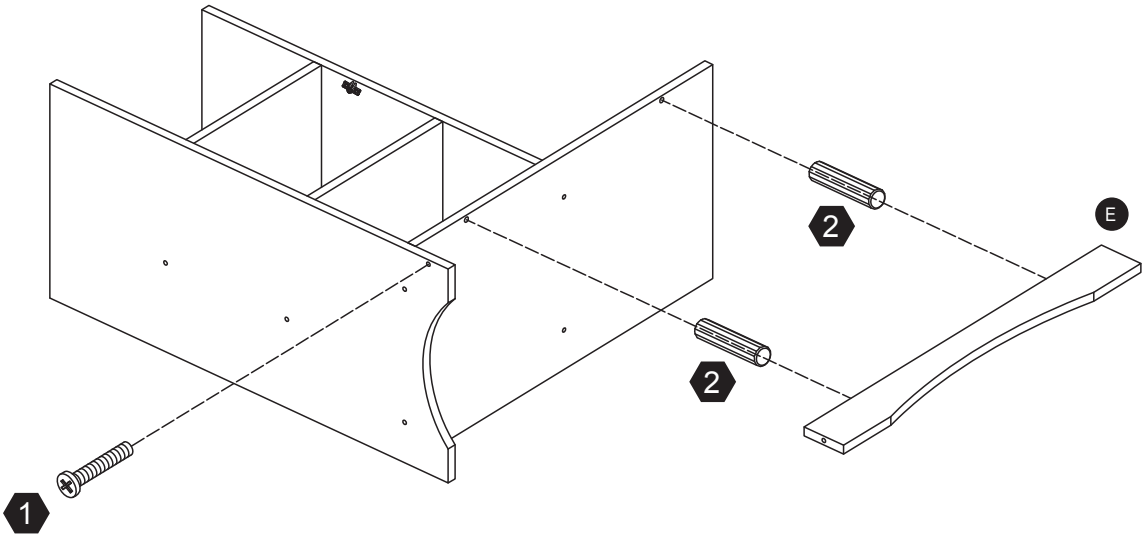

Step 5

1 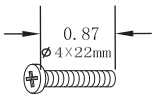

3 PCS

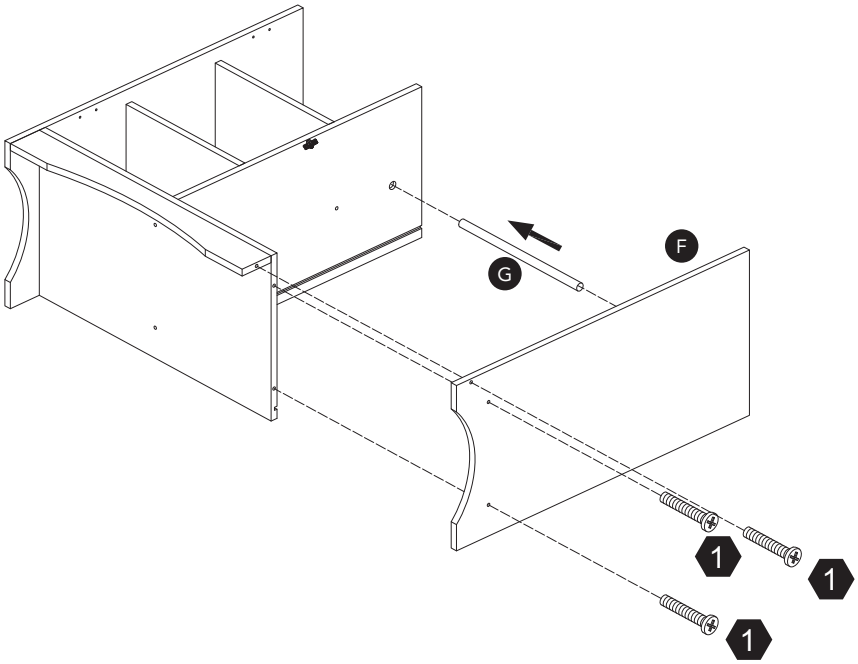

Step 6

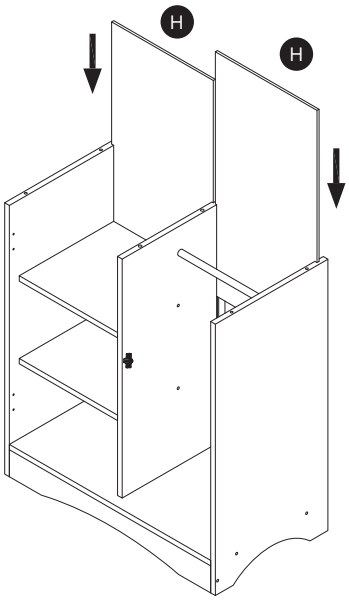

Step 7

6
⌀4×15mm
1 PC

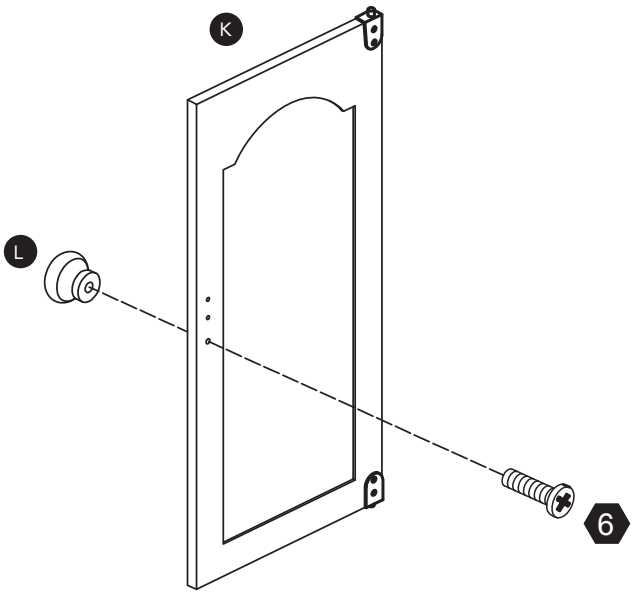

Step 8

3 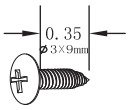

2 PCS

4
1 PC

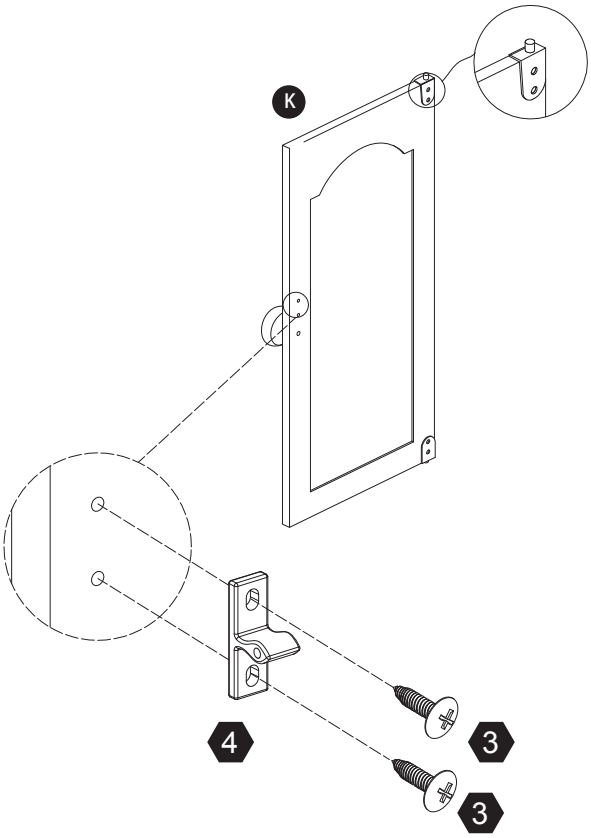

Step 9

6
1 PC
⌀4×15mm

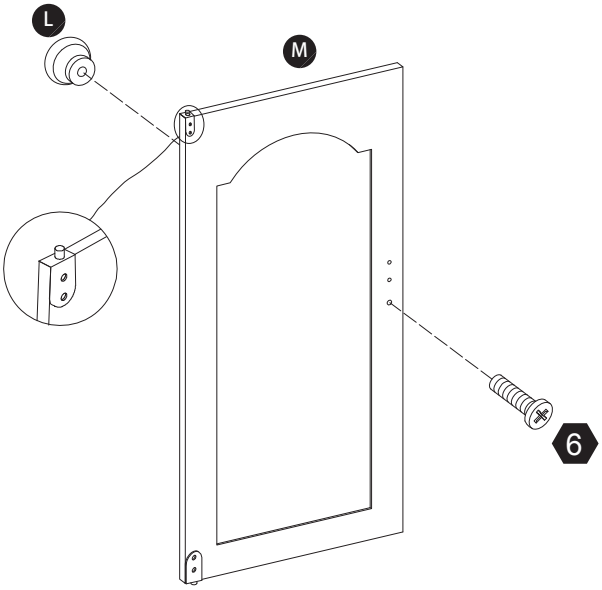

Step 10

3 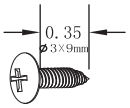

2 PCS

4
1 PC

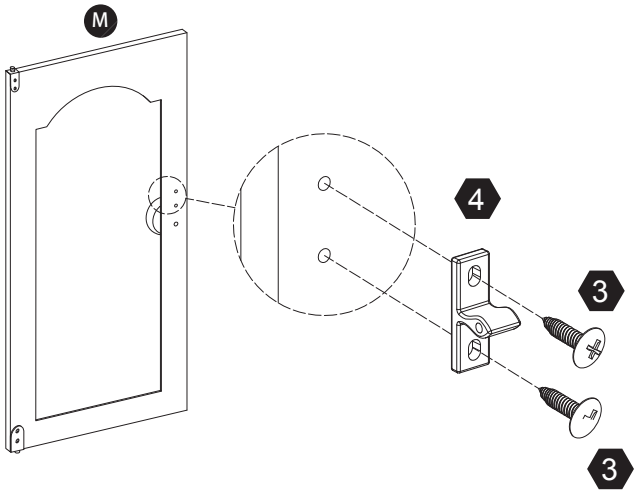

Step 11

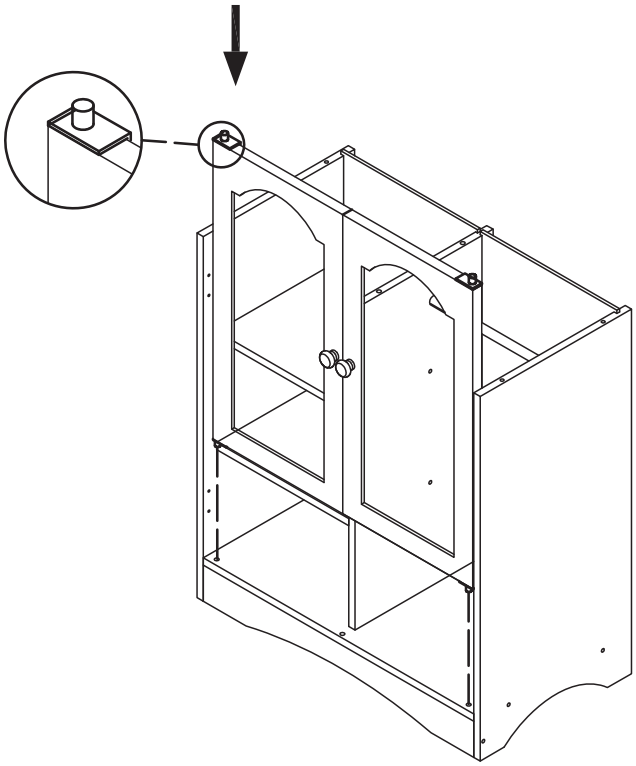

Step 12

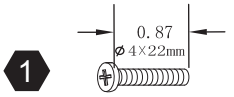

2 PCS

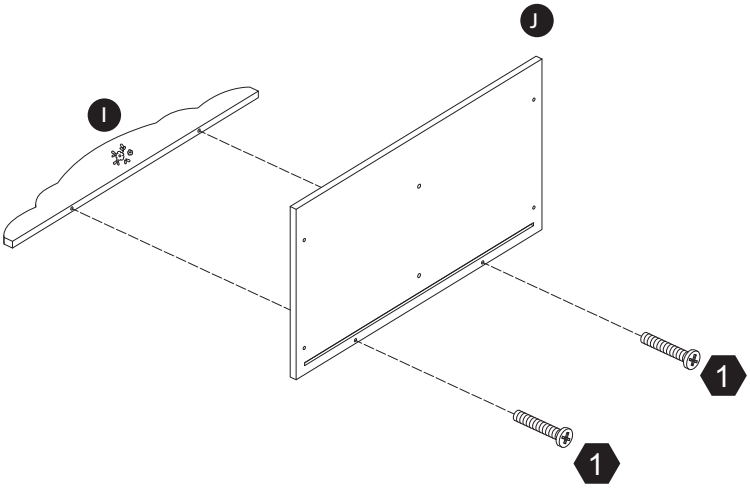

Step 13

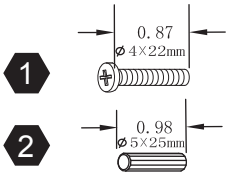

4PCS

2PCS

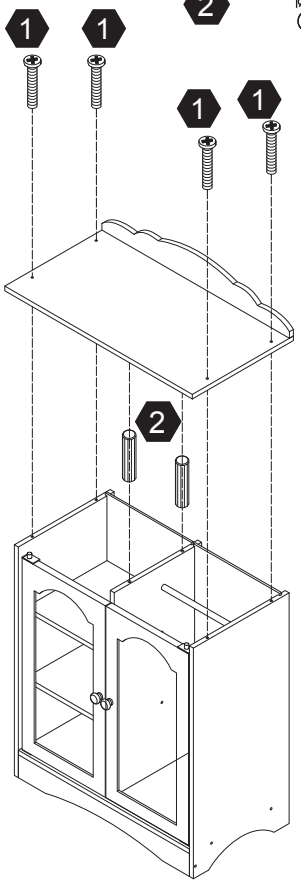

Step 14

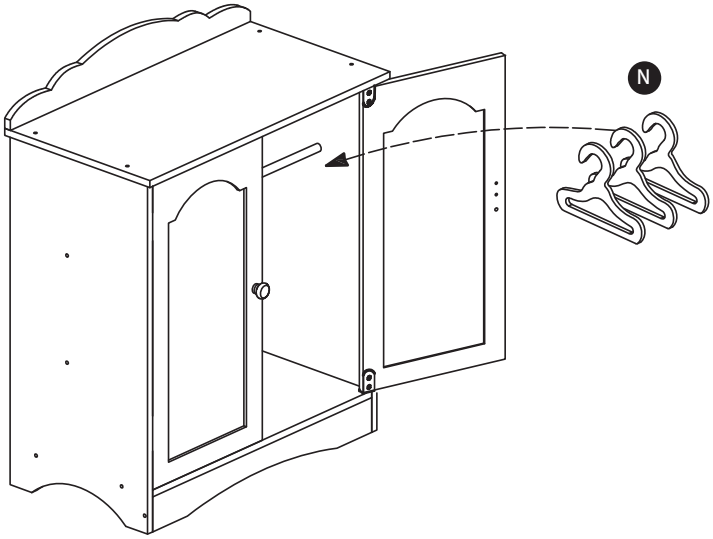

Step 15

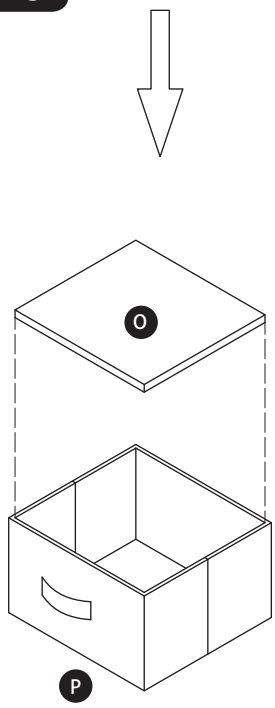

Step 16

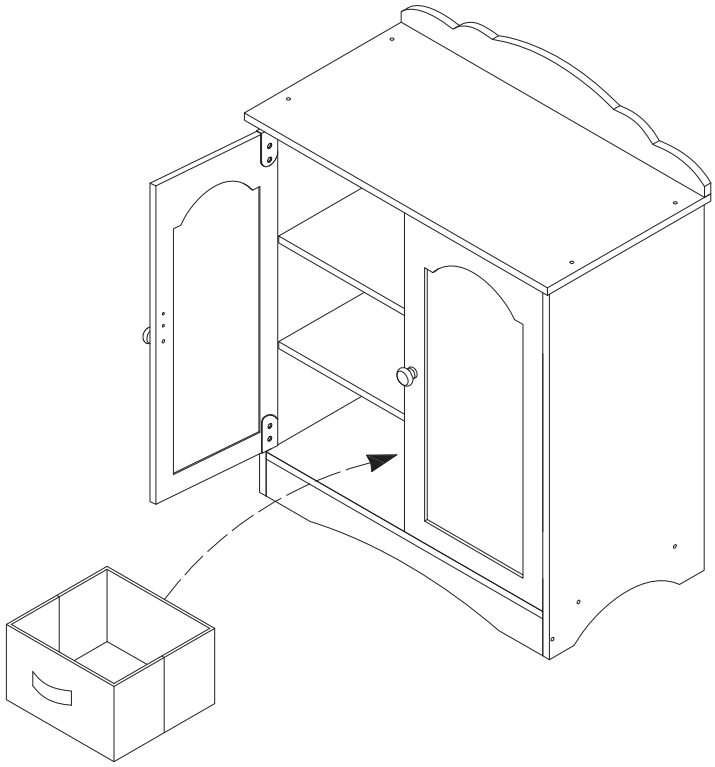
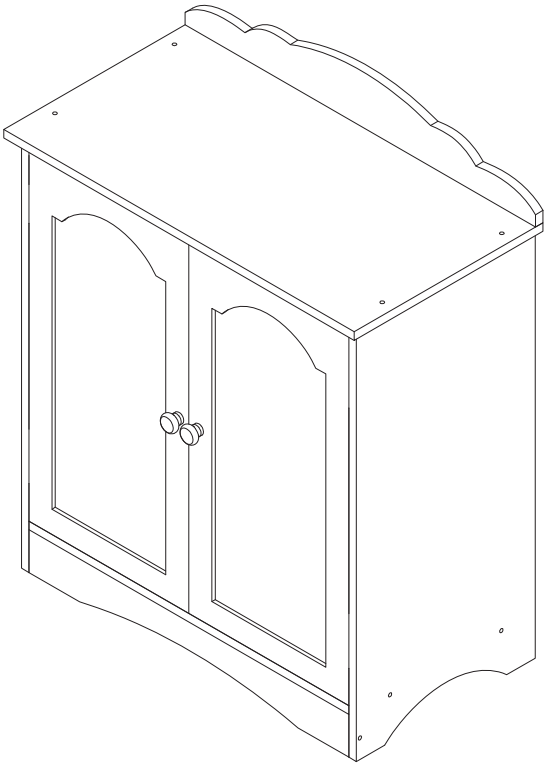
Step 17