# Double-Door Toilet Shelf (Flip-Up Door)

## ASSEMBLY INSTRUCTIONS

ASSEMBLY INSTRUCTIONS

## 1. Parts list

| | | | |
|---|---|---|---|
| R Side Shelvers 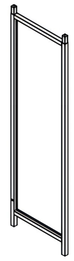 A1=1X | L Side Shelvers 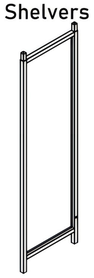 A2=1X | Top R Side Shelvers B1=1X | Top L Side Shelvers B2=1X |
| Top Board 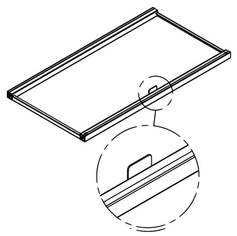 C1=1X | Down Board 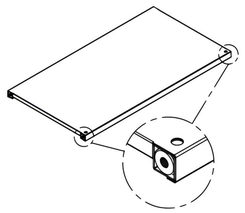 C2=1X | R Cabinet Door 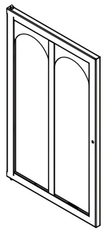 D1=1X | L Cabinet Door 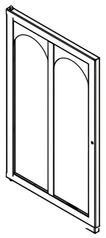 D2=1X |
| Down Board 1-1 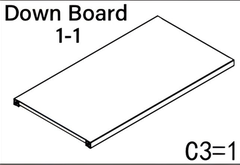 C3=1X | Cabinet Door PET Board E=2X | Flip-Up DooR 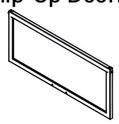 F=1X | Connection Pipe 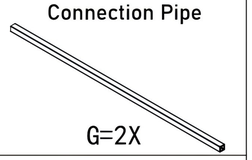 G=2X |
| Big reverse Borad 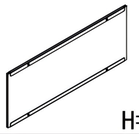 H=1X | Small reverse Borad J=2X | Flip-Up Door PET Board 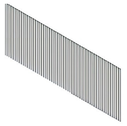 K=1X | Cross Bar 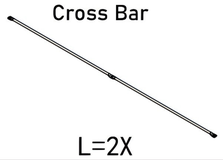 L=2X |
| Cap Screw M6*23 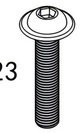 M=16X | Combination cross-point and hex wrench 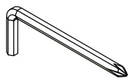 N=1X | Chamfered Edge M6*12 U=5X | Hook 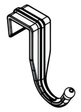 V=4X / Furniture Pad W=4X |
| Cabinet door handle Y=2X | Phillips Round Head Screw M4*15 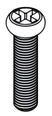 Z=4X | Door Pull 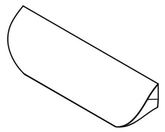 O=1X | Wrench 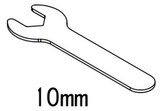 10mm P=1X |
| Traceless Paste 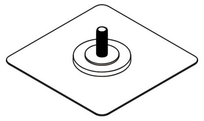 Q=2X | Magnet S1=1X | Clip T=26X | Fitting ZB=4X |
| | 小磁片 S2=2X | Cap Nut M6*12 ZA=1X | Plastic Gasket ø12*ø6*1.2 ZC=2X |

## 2. Product demonstration

2.1 Cross bar

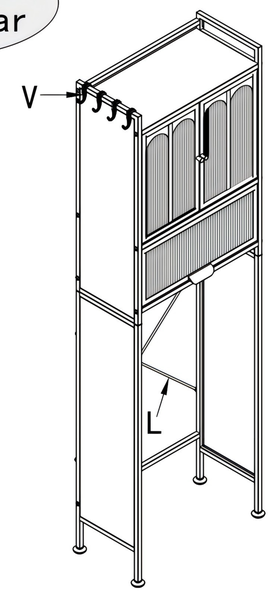


2.2 Traceless paste

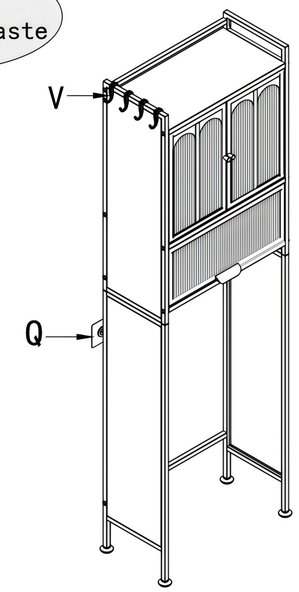


## 3. Installation steps

1. Firstly, insert L and W into the tube openings of A1/A2.

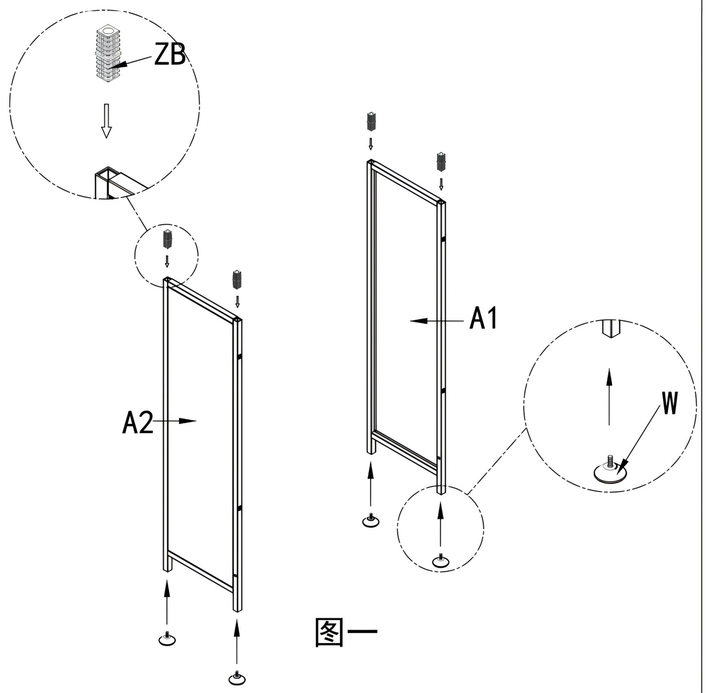


图一

2. Initially, secure the H-Connection pipe linking A1 and A2 with an M-Cap Screw. Subsequently, thread the U through G and attach it to A1/A2. Furthermore, join the center of the Cross bar using U and R.

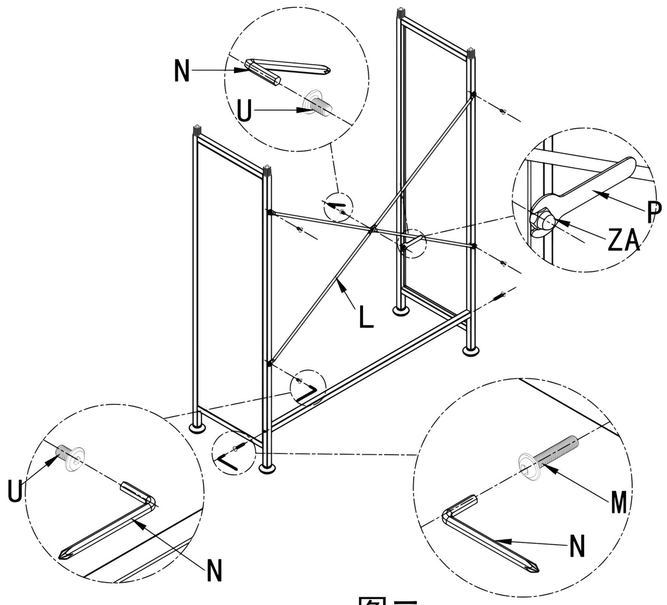


图二

# 3. Installation steps

2. 2 Using M, secure the Connection pipe to A1/A2, and then install the Traceless Paste.

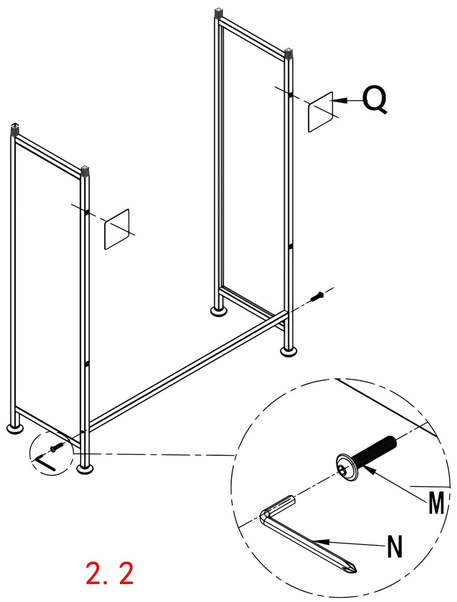


2. 2

Wall-mounted installation with no obstructions allowed.

3.First, install B1 and B2 onto A1 and A2 respectively. Peel off the protective film from S2 and adhere it to the positions of B1 and B2. Insert M through B1 and B2 to connect C3. Insert H into the slots of B1 and B2.

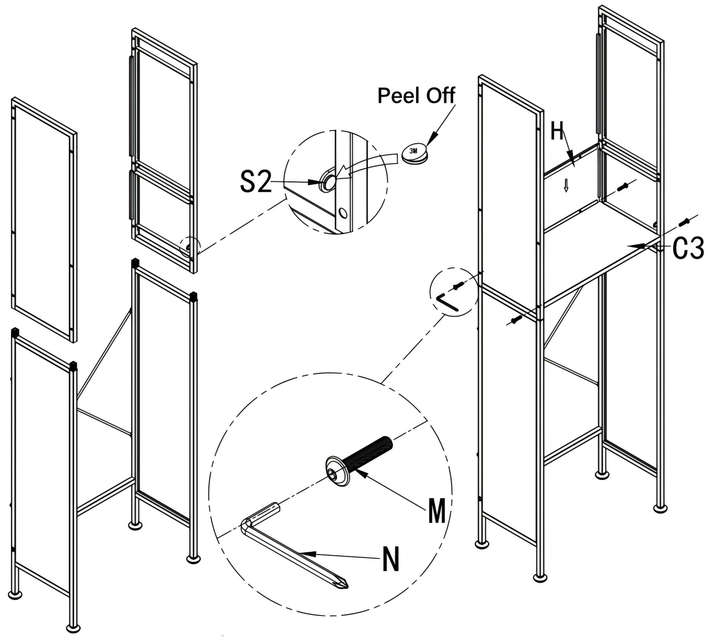


3 4

4.Insert M through B1 and B2 to connect C2. Insert H*2 into the slots of B1 and B2. Insert M through B1 and B2 to connect C1. Insert M through B1 and B2 to connect G. Adhere S1 to the central point of C1.

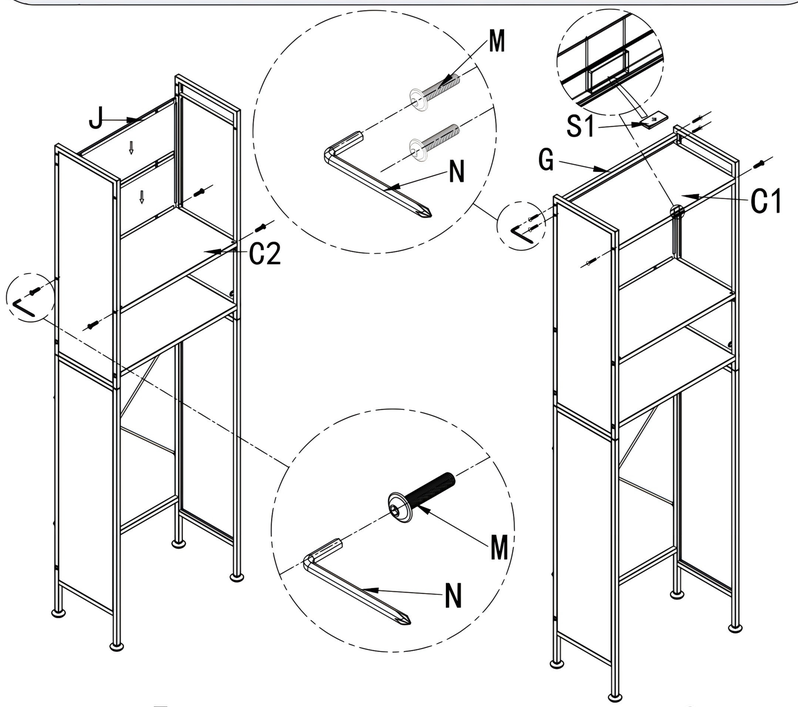


5 6

5.Remove the films from both sides of the E-PET board and insert it into D1 /D2, facing the corrugated PET side forward as shown in the diagram.

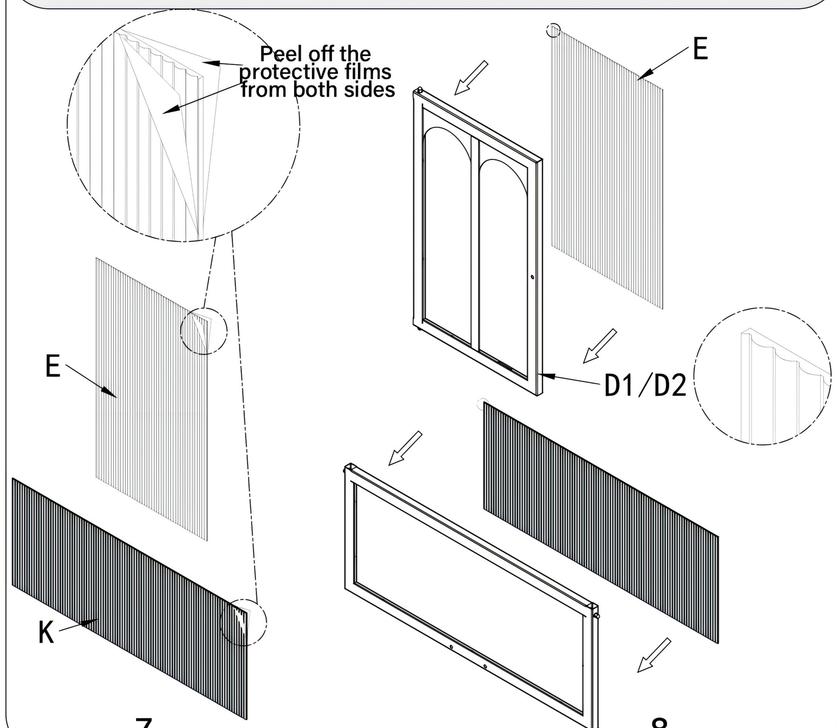


7 8

6. Secure T into the slots of D1/D2 with a snap-fit action. Insert Z through the rear side of D1/D2 to engage with Y. Pass Z through F from the rear and couple it to O.

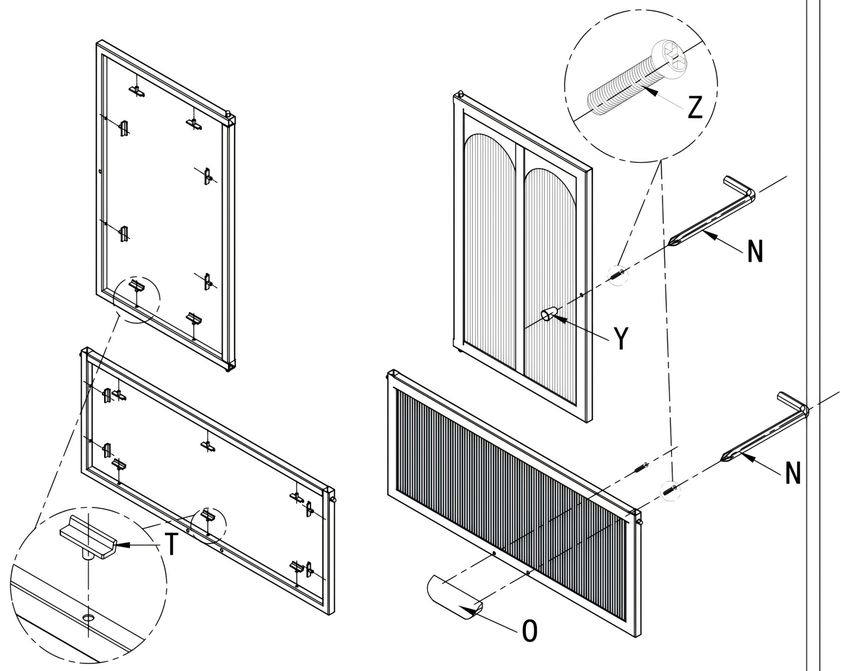


9 10

7. Attach gaskets to the bottom of both door panels and snap the elastic latches to fit the door frame into the aligned holes on all sides.

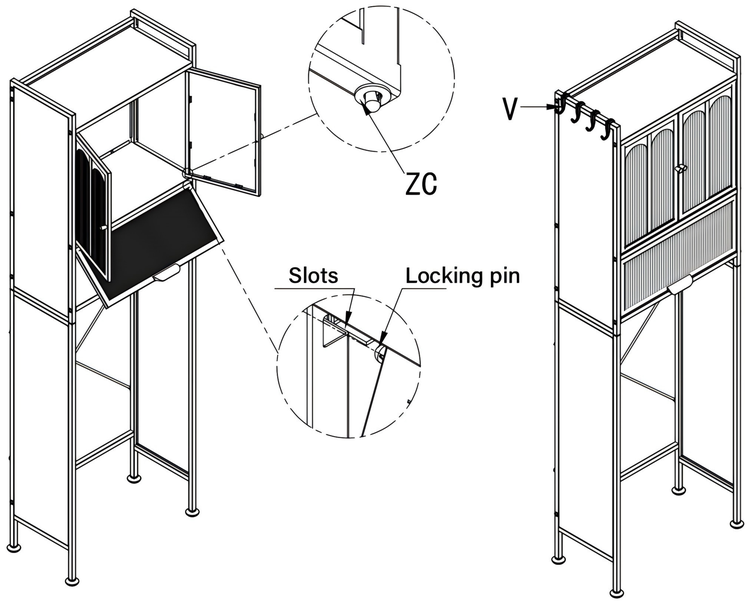


11 12