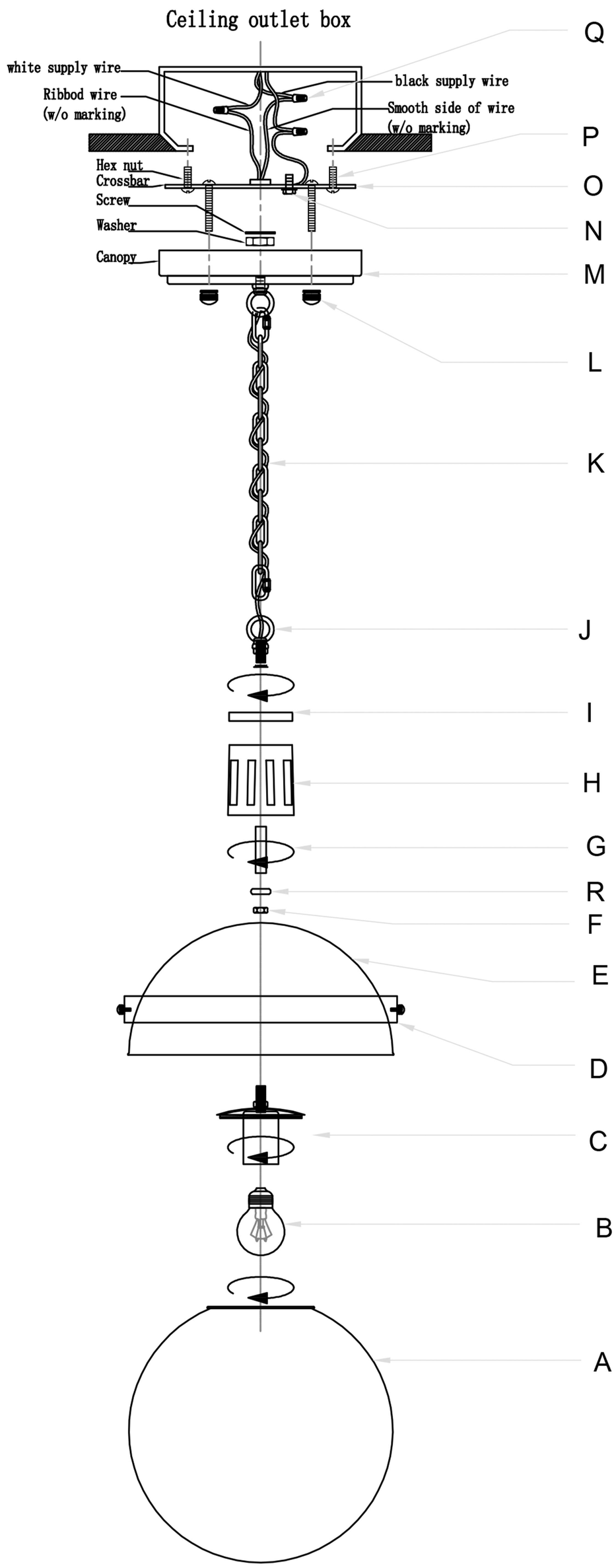

Installation Steps:

Step 1: Rotate and lock the bulb (B)(without bulb) to the lamp cup assembly (C).
Step 2: Rotate the lamp cup assembly (C) to lock the glass assembly (A).
Step 3: Fix the semi-round cover (E) together by nut (F) and lamp cup combination (C), and then flat iron ring (D)over half round cover (E).
Step 4: Rotate the straight tube (G) to the top of the half-round cover (E), and then put the bar hole lamp cup(H), and the straight edge cover (I) is fixed by a combination of dental rings.
Step 5: Fix the chain (K) and the top cover assembly (M) with the ring assembly (10).
Step 6: Fix the one-line hanging plate (O) to the wiring box on the roof with screws (P), and then fix the ground wire to the hanging plate (O).
Step 7: Connect the lamp body wire and power cord with the wiring cap (Q) and then fix the suction top cover (M) to the wiring box on the roof with an embodying iron (L).

Accessories:

R: Flat Cover*1	
Q: Wiring Cap*3	
P: Screws*4	
O: Mounting Plate*1	
N: Screws*1	
M: Canopy*1	
L: Nut*2	
K: Chain*1	
J: Buckle*1	
I: Straight Edge Cover*1	
H: Fittings*1	
G: Iron pipe*1	
F: Nut*1	
E: Semicircular Cover*1	
D: Flat Iron Ring*1	
C: Lamp Base*1	
A: Glass Shade*1	

Notice: This light fixture should be installed in accordance with all applicable, local installation codes, and by a person familiar with the construction and operation of it, as well as the hazards involved. Inspect items and contents carefully. If any damage or defect is found, do not install it.