Assembly Instruction

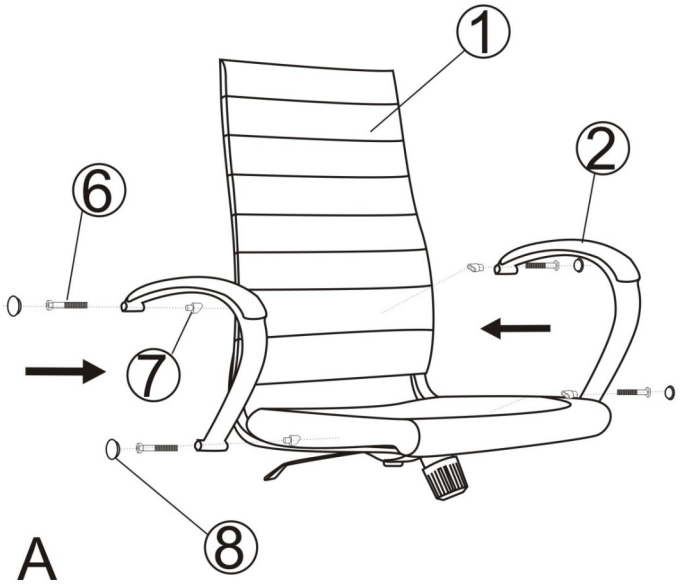

A

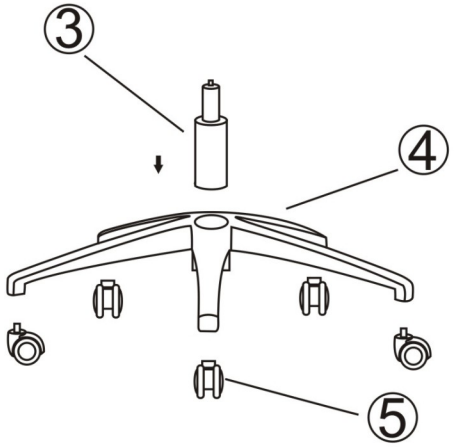

B

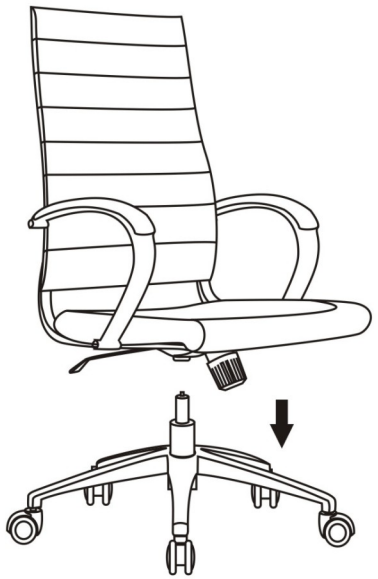

C

D

No.	Accessories	Size	QTY
①			1
②			2
③			1
④			1
⑤			5
⑥		8x50	4
⑦			4
⑧			4
Tool:		M8	1