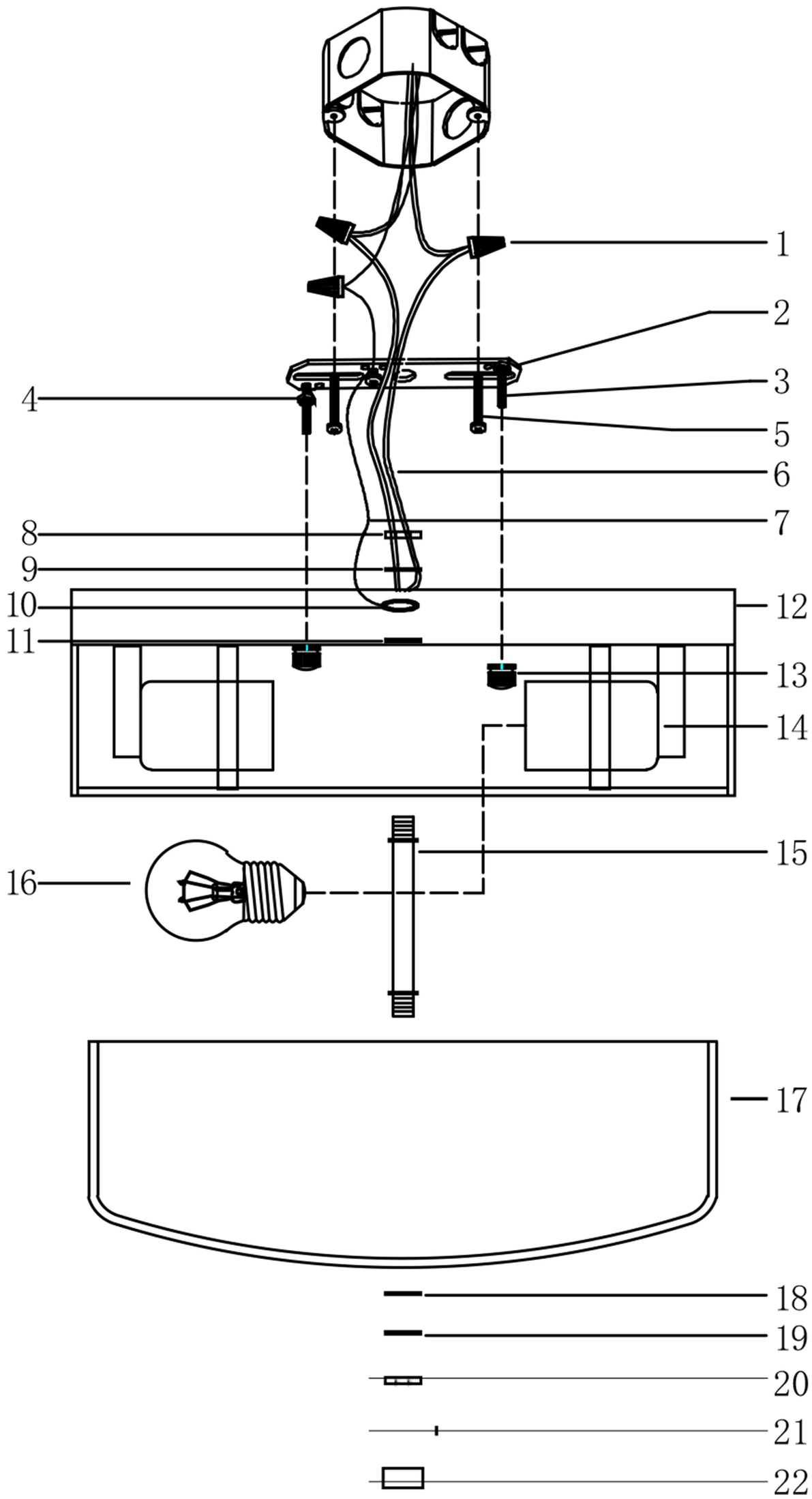

Installation Steps：

Step 1: Attach the mounting plate (2) to the junction box with screws (5).
Step 2: Thread the straight tube(15) through the center hole of the canopy (12), and fasten the shim(11) ground wire buckle (10) shim(9) with the nut (8).
Step 3: Connect the power cable (6) of the lamp body to the external power cable using a wiring cap (1). Connect the ground cable (7) to the external ground cable using a wiring cap (1).
Step 4: Fix the canopy (12) to the mounting plate (2) with nuts (4) (13) screws (3).
Step 5: Install the bulb (16)(not included) on the lamp holder (14).
Step 6: Pass the lamp shade (17) gasket (18) shim(19) through the straight tube (15) and tighten with the nut (20), then tighten the flat cover (21) with the ornamentation head (22).

Accessories：

Part 2：Mounting Plate*1	
Part 3/4：Mounting Screw,nut*2	
Part 5：Mounting Screw*2	
Part 1：Wiring cap*3	
Part 13：Nut*2	
Part 9/11/19：shim*3	
Part 10：Ground wire buckle*1	
Part 8/20：Nut*2	
Part 18：Rubber gasket*1	
Part 17：Glass Cover*1	
Part 15：Straight tube*1	
Part 21：flat cover*1	
Part 22：ornamentation head*1	

Notice： This light fixture should be installed in accordance with all applicable, local installation codes, and by a person familiar with the construction and operation of it, as well as the hazards involved. Inspect items and contents carefully. If any damage or defect is found, do not install it.