Product Installation Instructions

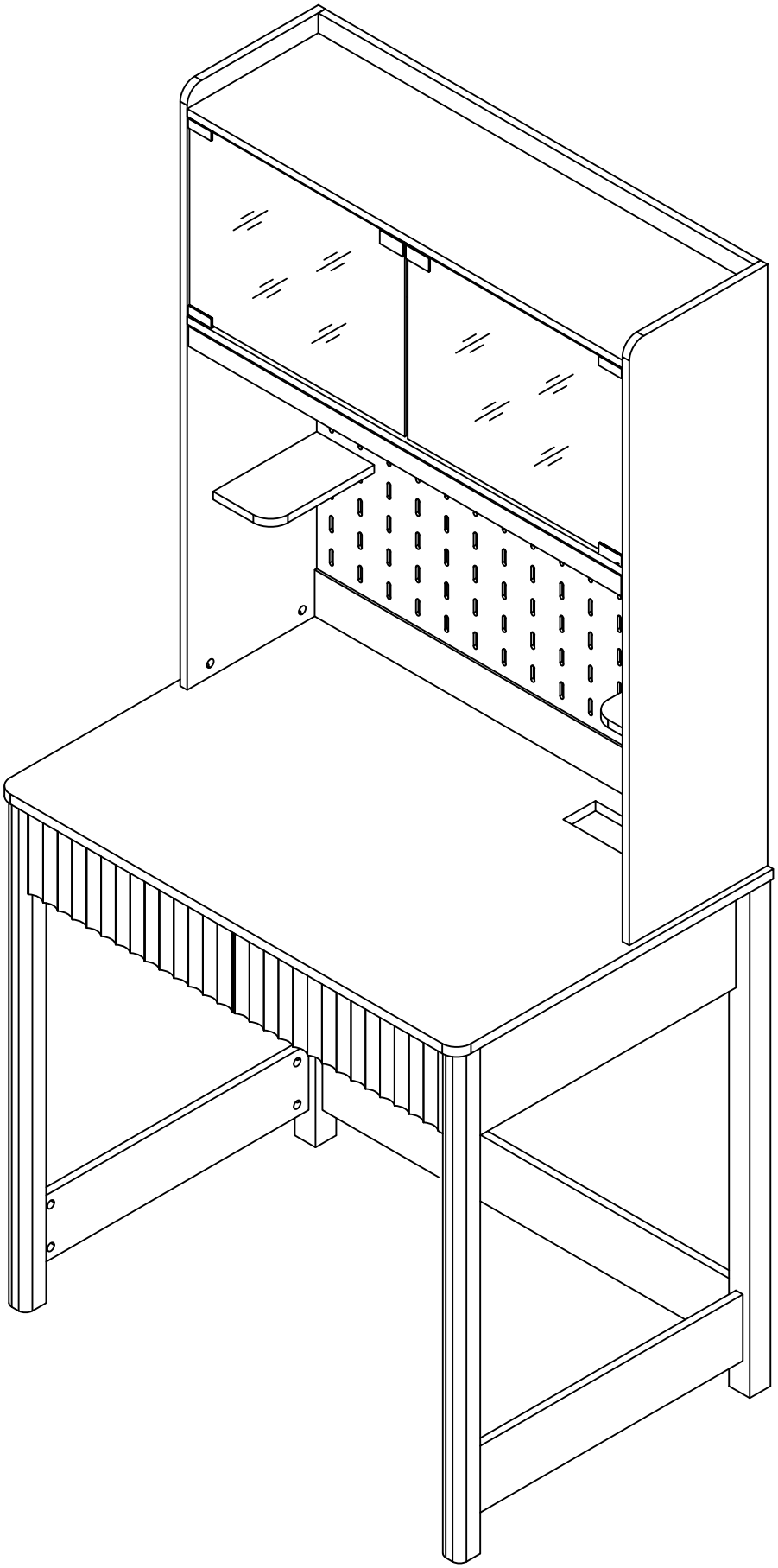

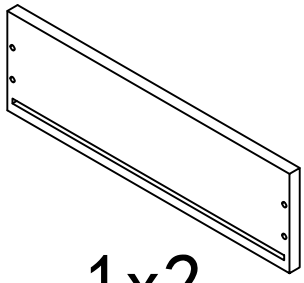
1x2

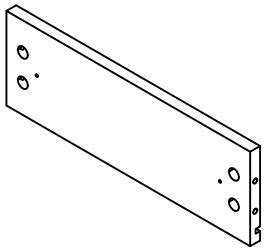
2x4

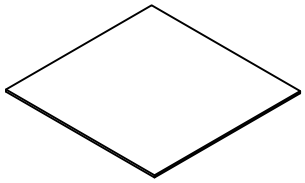
3Ax2

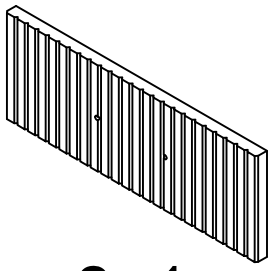
3x1

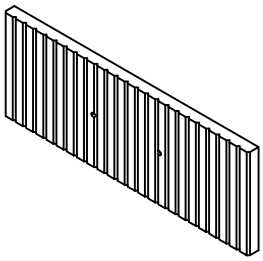
4x1

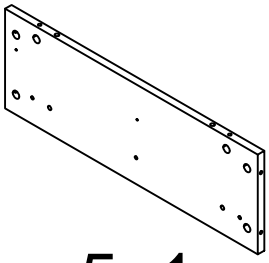
5x1

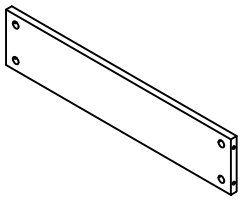
6x2

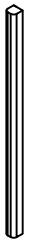
7x1

8x1

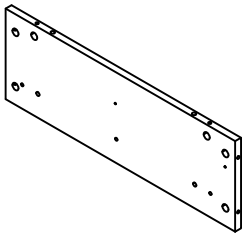
9x1

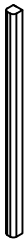
10x1

11x1

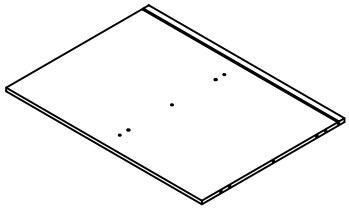
12x1

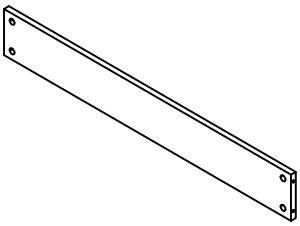
13x1

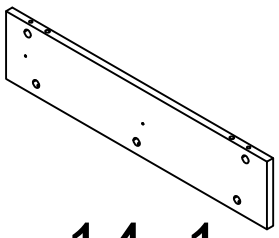
14x1

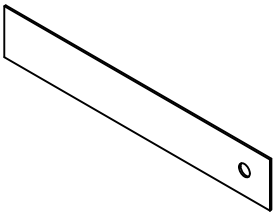
15x1

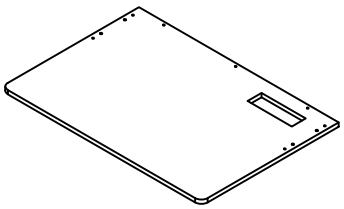
16x1

17x1

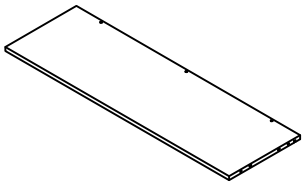
18x1

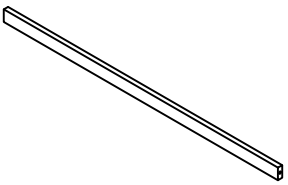
19x1

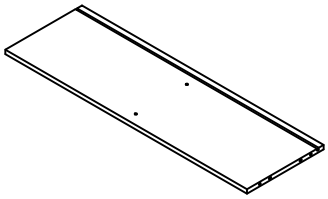
20x1

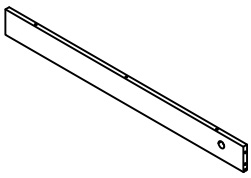
21x1

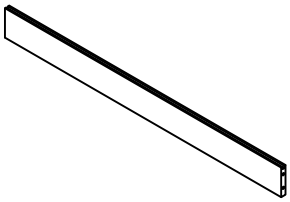
22x1

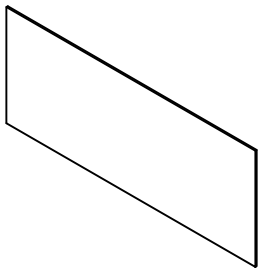

23x1

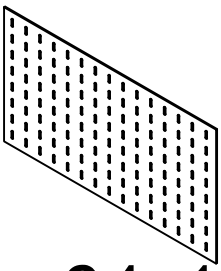

24x1

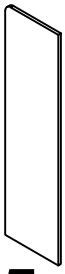

25x1

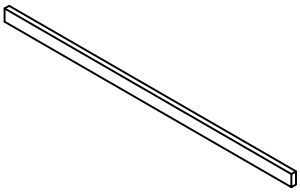

26x1

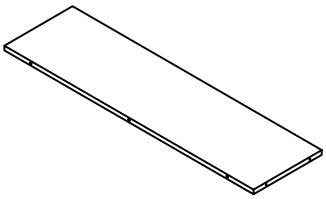

27x1

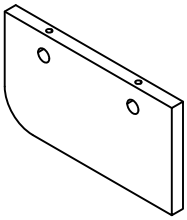

28x1

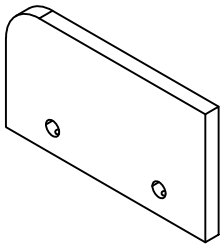

29x1

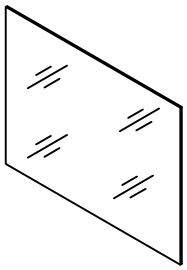

30x2

Accessories list

A		Two In One Screw (6x28mm)	89pcs +4pcs
B		Two In One Nut (10x12mm)	89pcs +4pcs
C		Wood Chipping (6x30mm)	24pcs +2pcs
D		Buckle light & Guide & Snap fastener (3.5x12mm)	2pcs; 2pcs +1pcs; 1pcs
E		Back plate buckle & Screw （3x16mm）	16pcs +2pcs
F		Non-slip pads	4pcs +1pcs
G		Screw & Guide (12 inch) (3.5x12mm)	16pcs +4pcs; 4pcs
H		Screw & Guide (8 inch) (3.5x12mm)	8pcs +4pcs; 2pcs
I		Power Socket & Screw (3.5x12mm)	2pcs +1pcs; 1pcs
J		Rebound device & Screw (3x16mm)	1pcs; 4pcs +1pcs
		Iron sheet & Hinge	2pcs; 2pcs; 2pcs
		Rubber ring	4pcs
K	x2; x2; (3. 5x14mm) x2; x4; x2 (4x45mm)	1pcs; Double-head screwdriver, use as required	

Product Installation Instructions

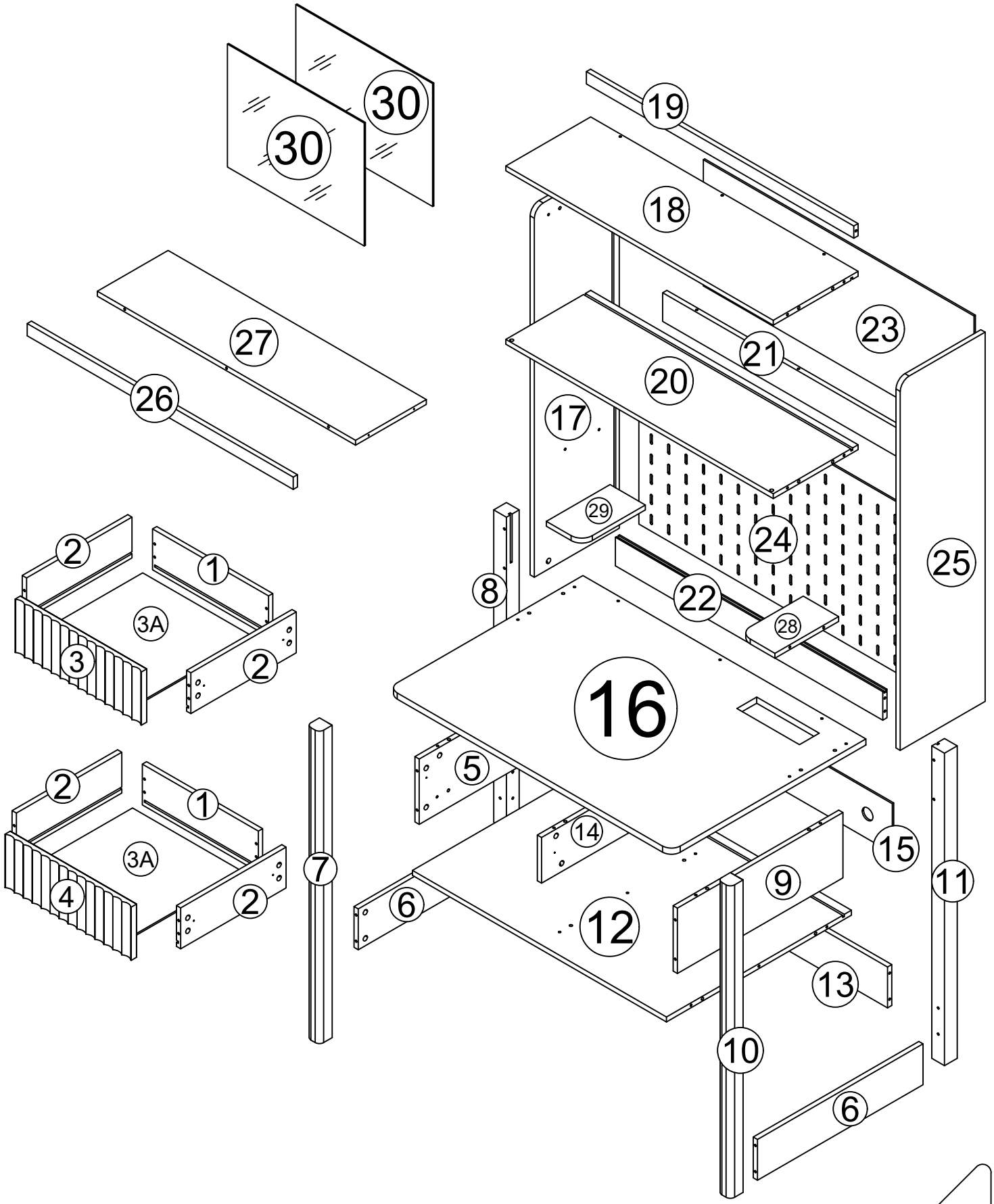

A	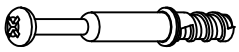	16pcs	G	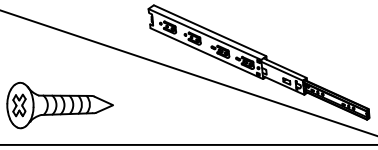	4pcs 8pcs
B		16pcs			

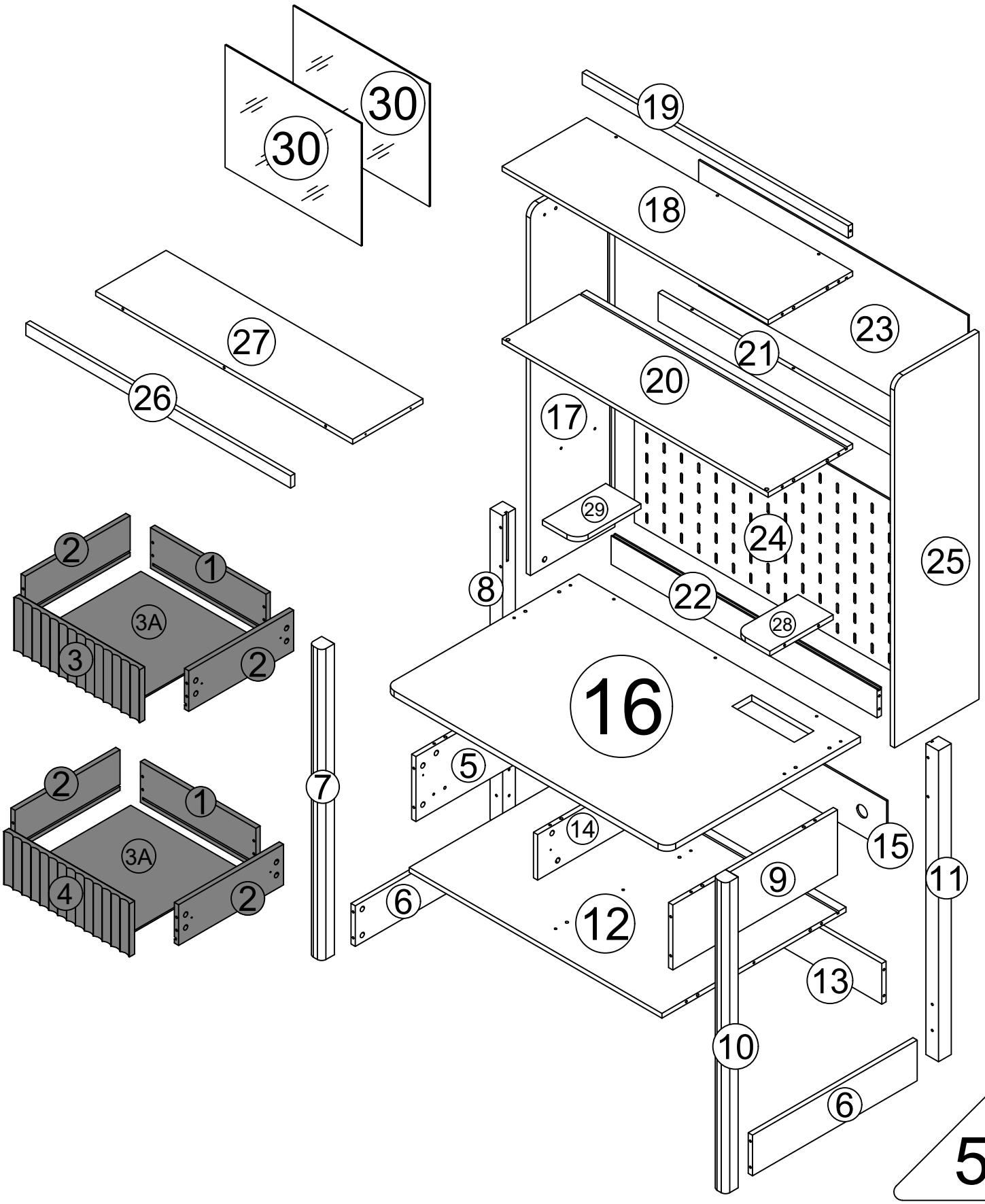

Use parts Ⓐ and Ⓑ

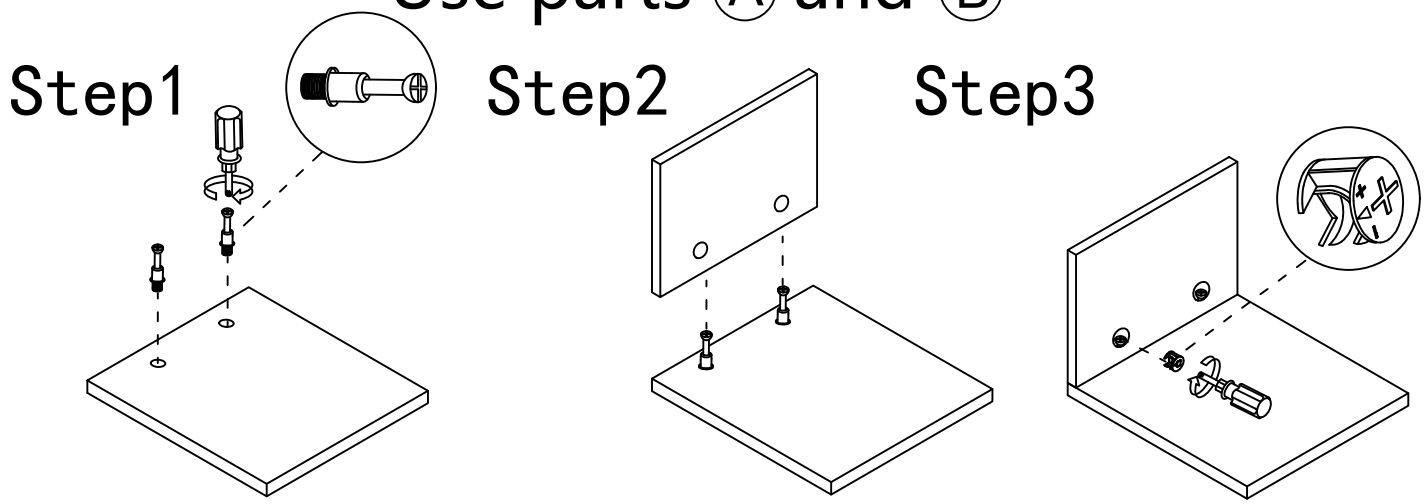

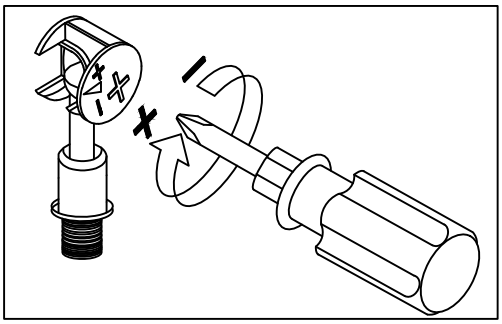

Use a screwdriver to lock in the direction of the "+" sign

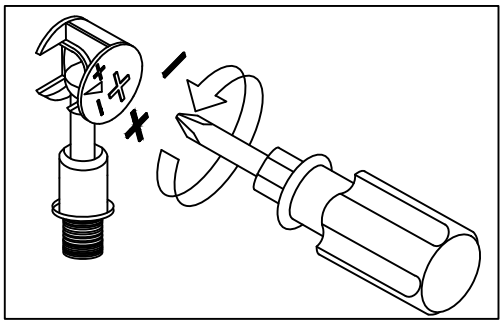

Disassemble along the direction of "-" sign

Step 1

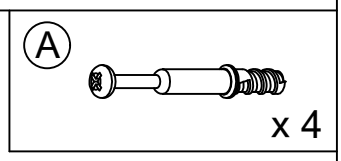

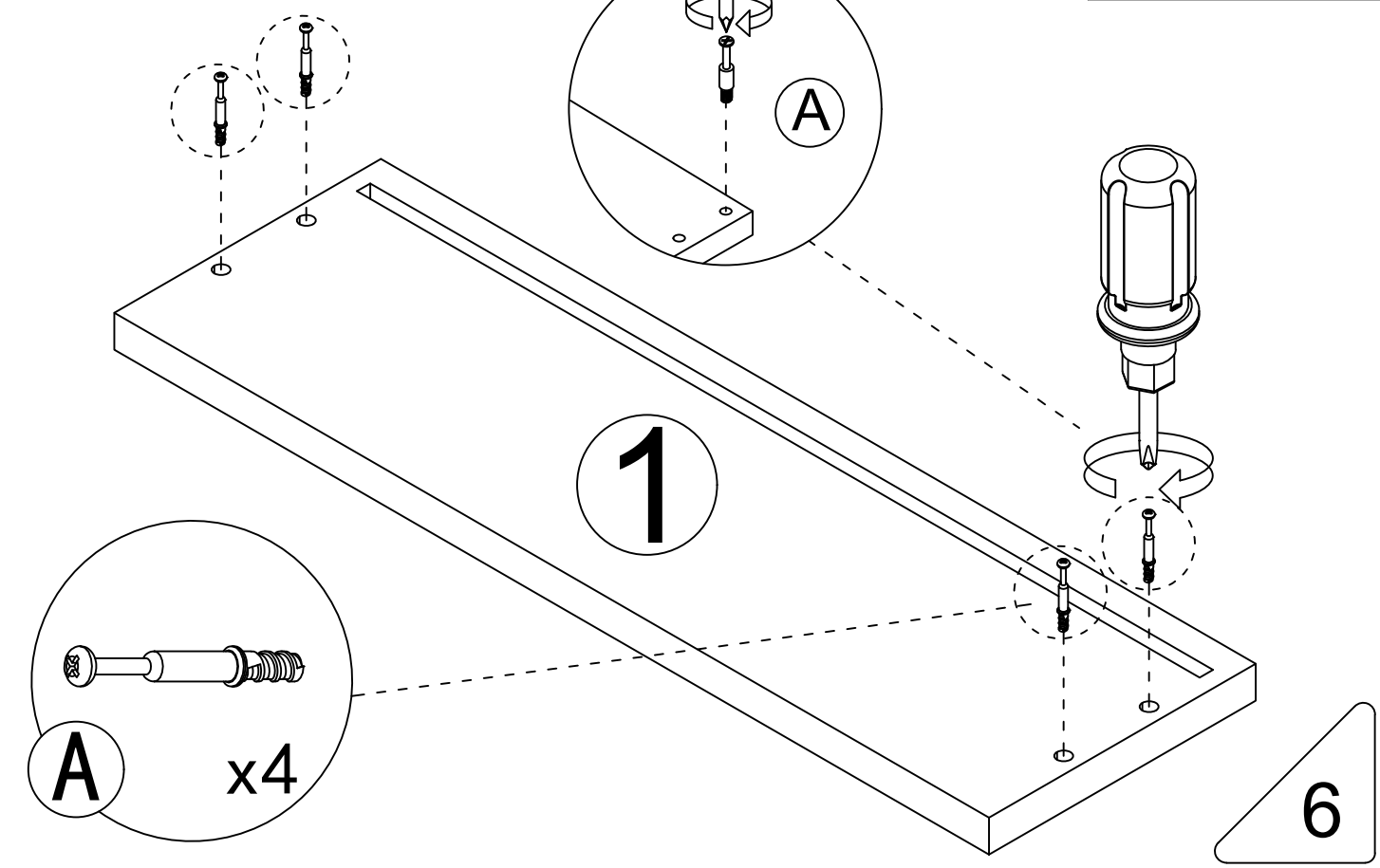

Step 2

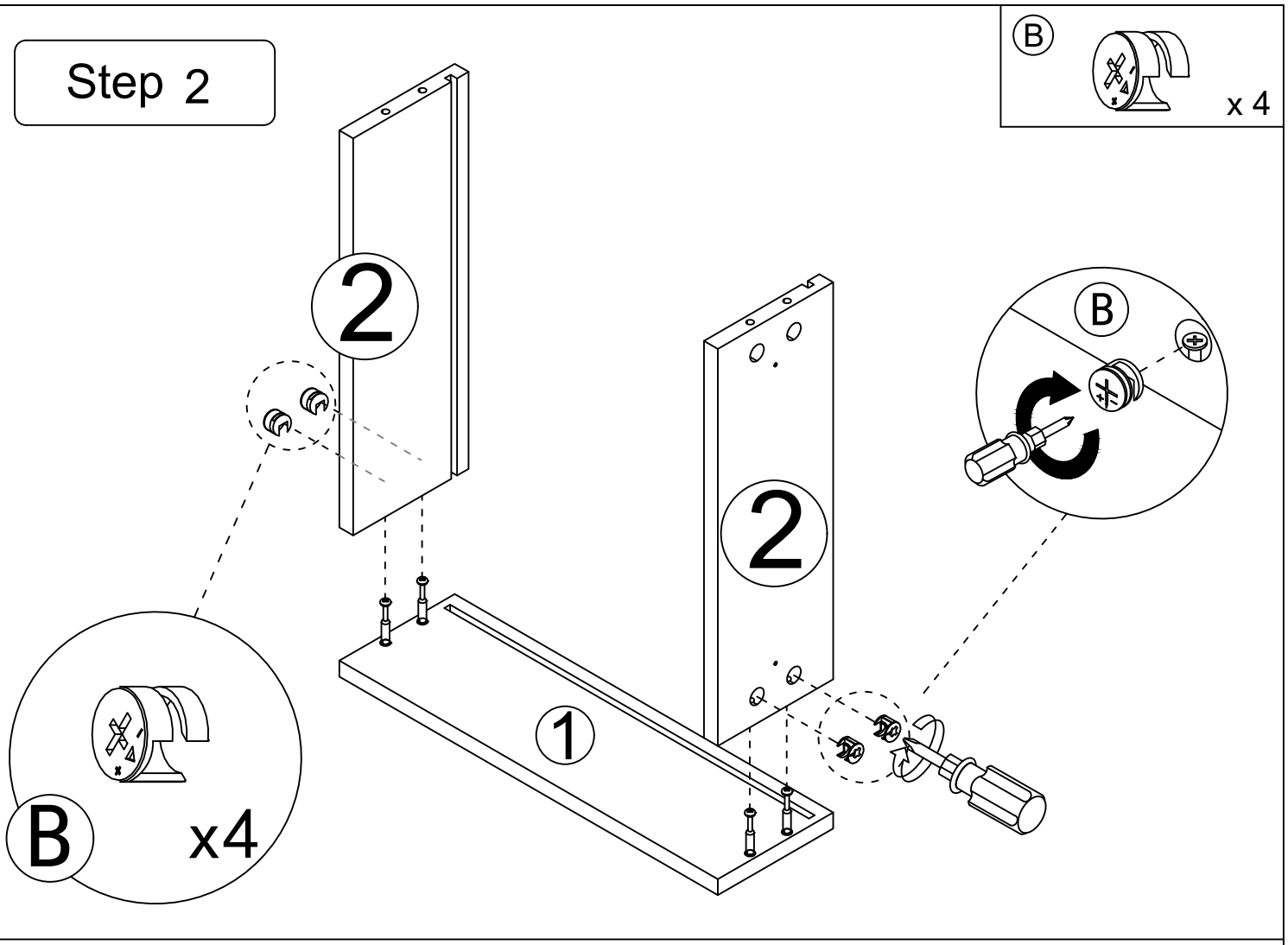

Step 3

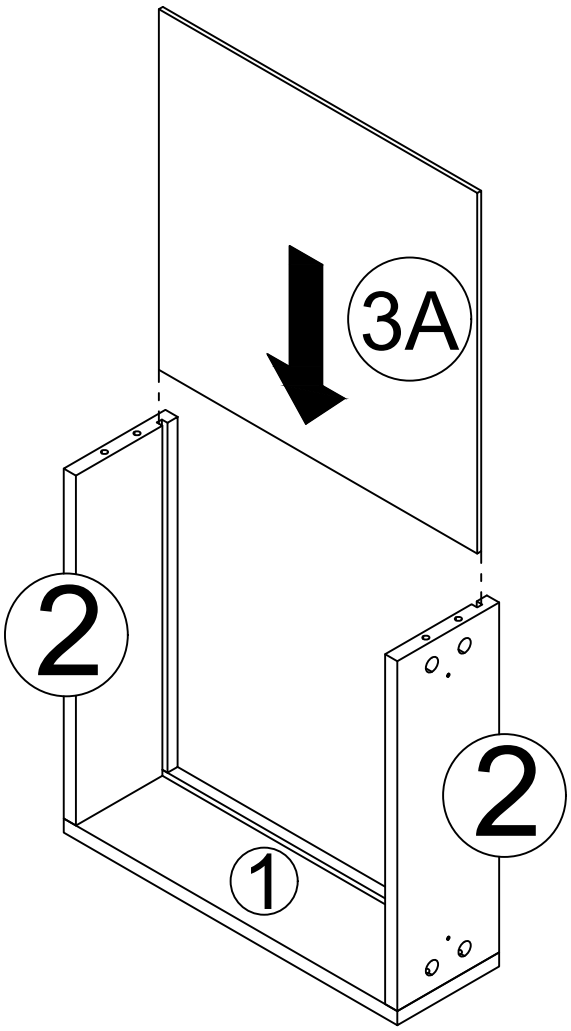

Step 4

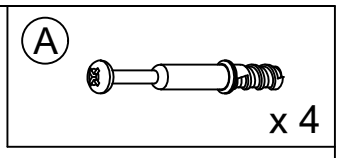

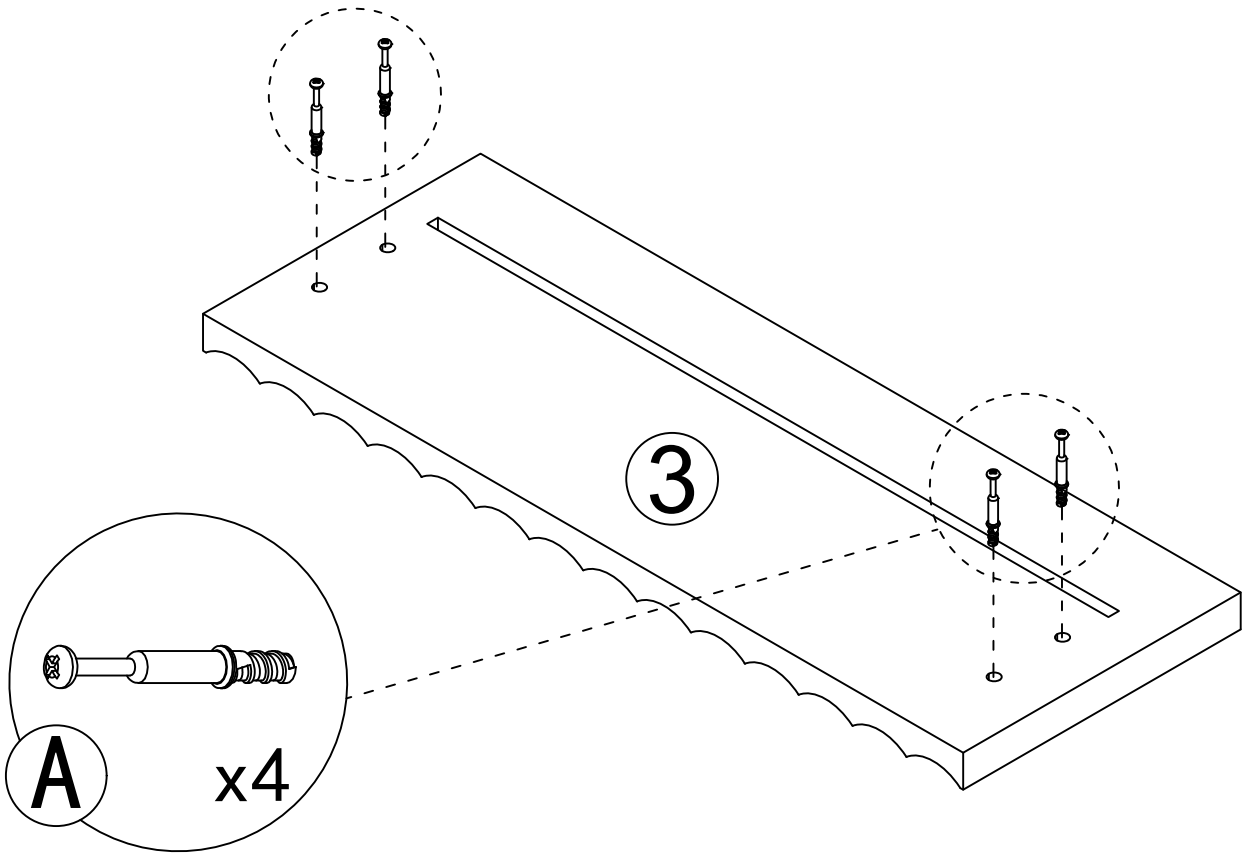

Step 5

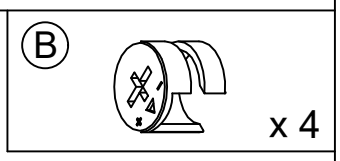

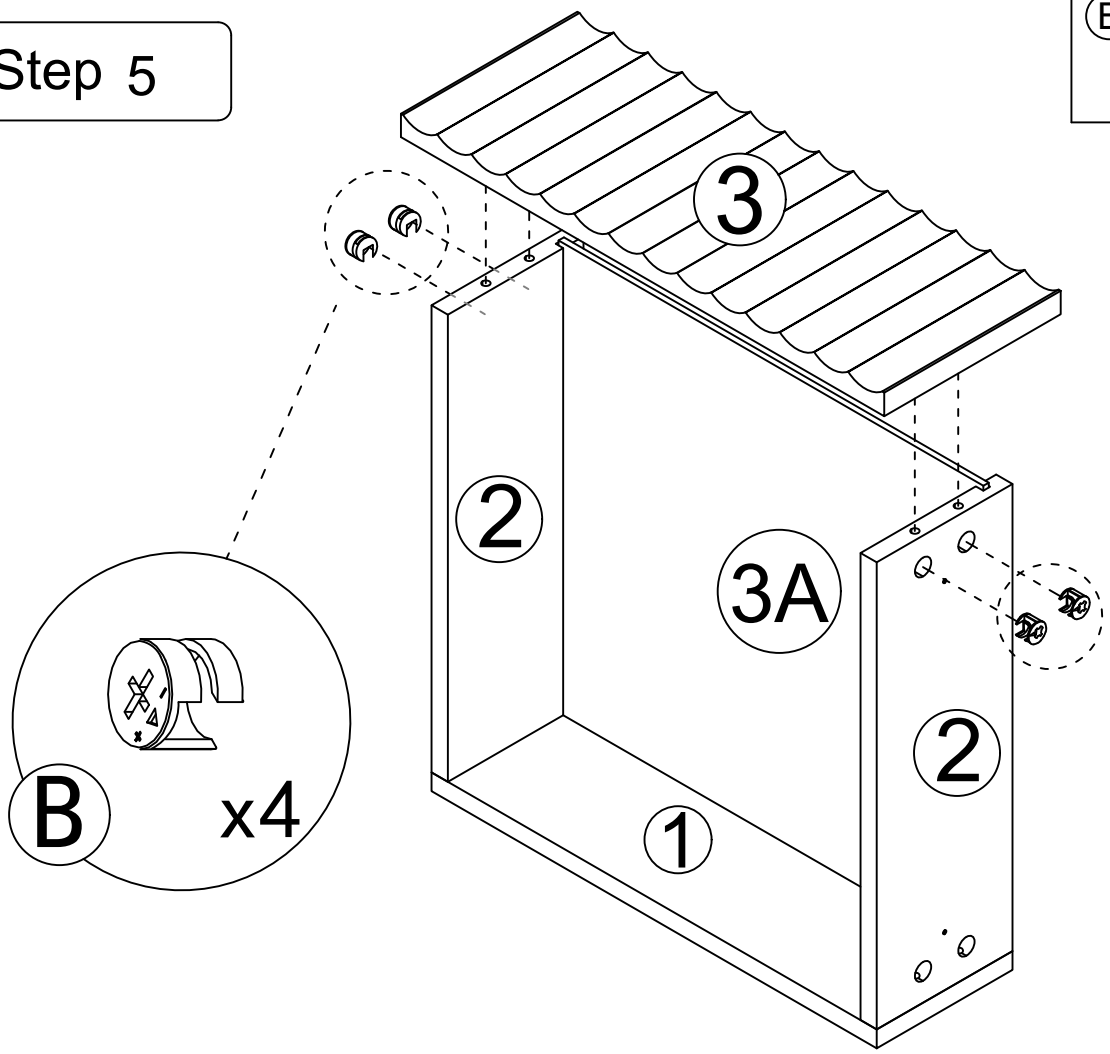

Step 6

Drawer rail breakdown diagram

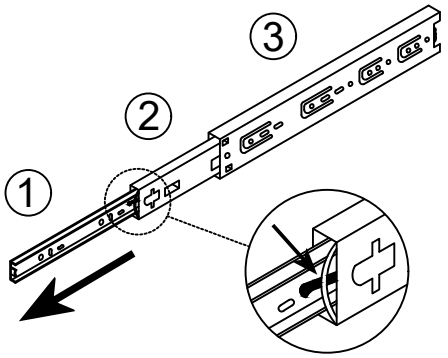

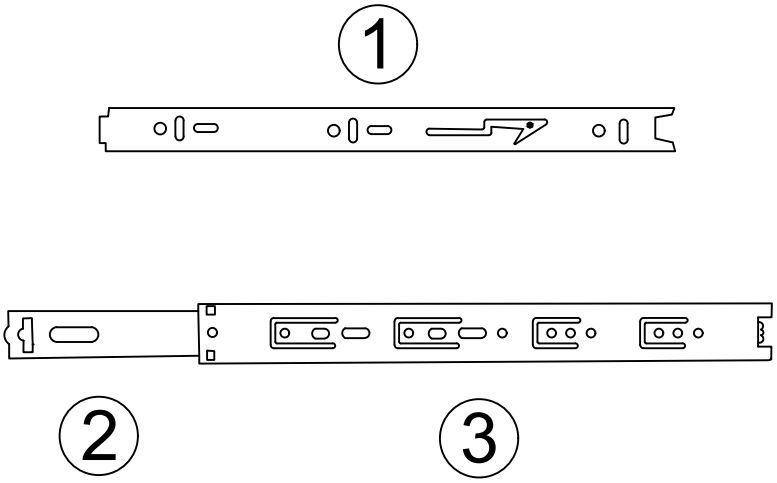

Step 1 : Pull the rails apart

Step 2 : Push the nylon buckle outward ①

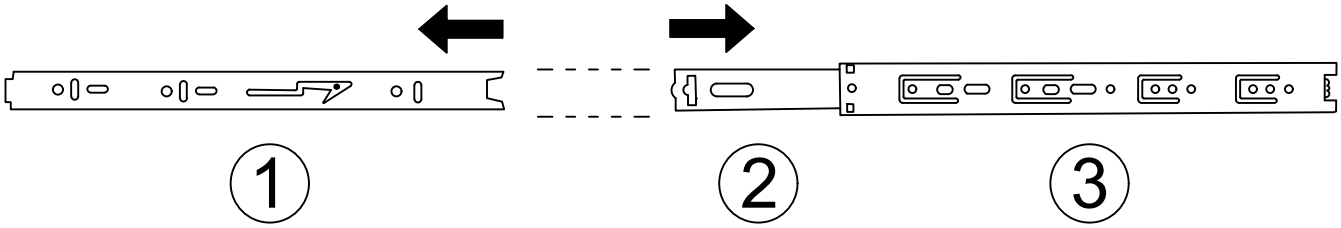

Step 7

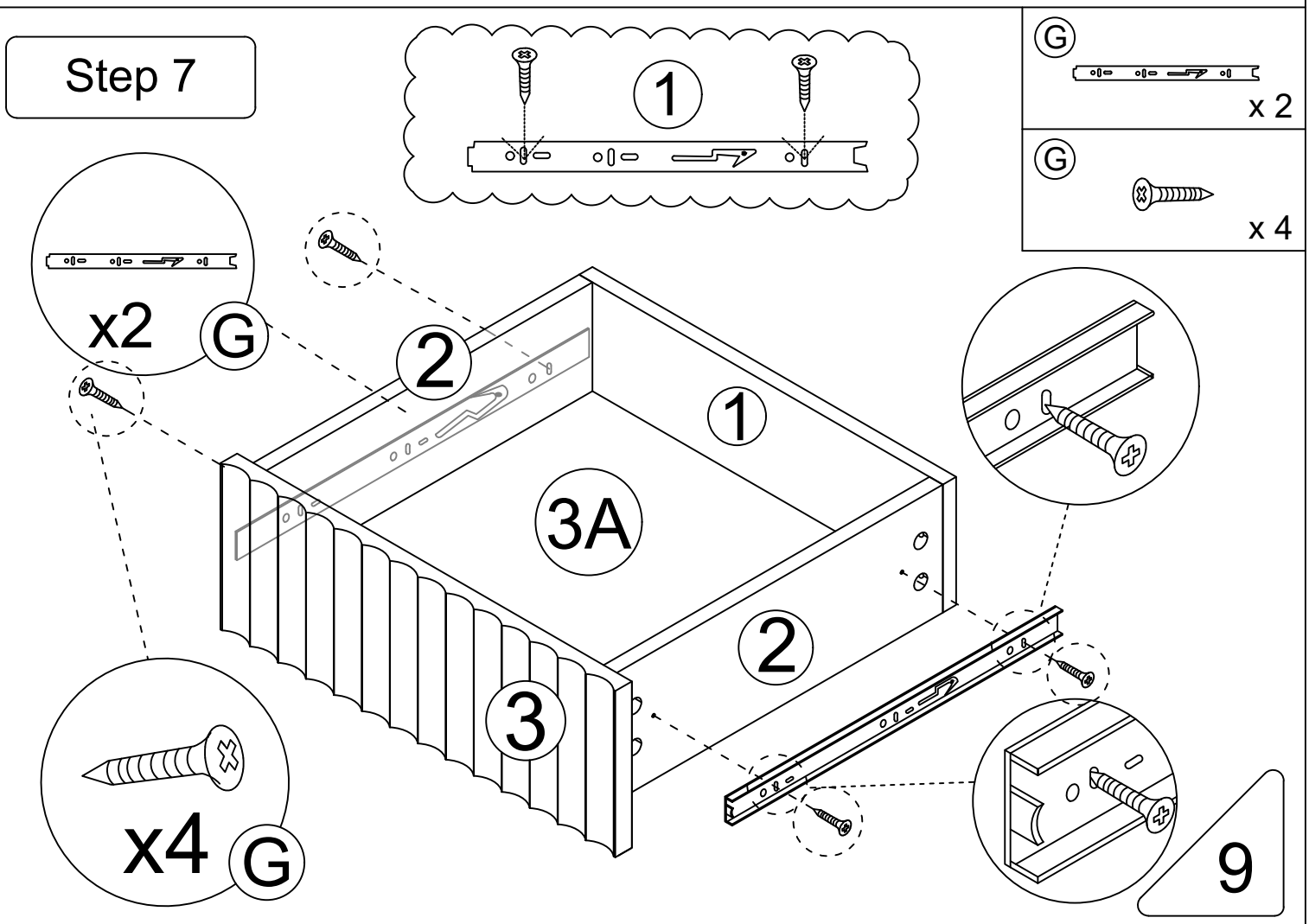

Step8

A	x 8
B	x 8
G	x 2
G	x 4

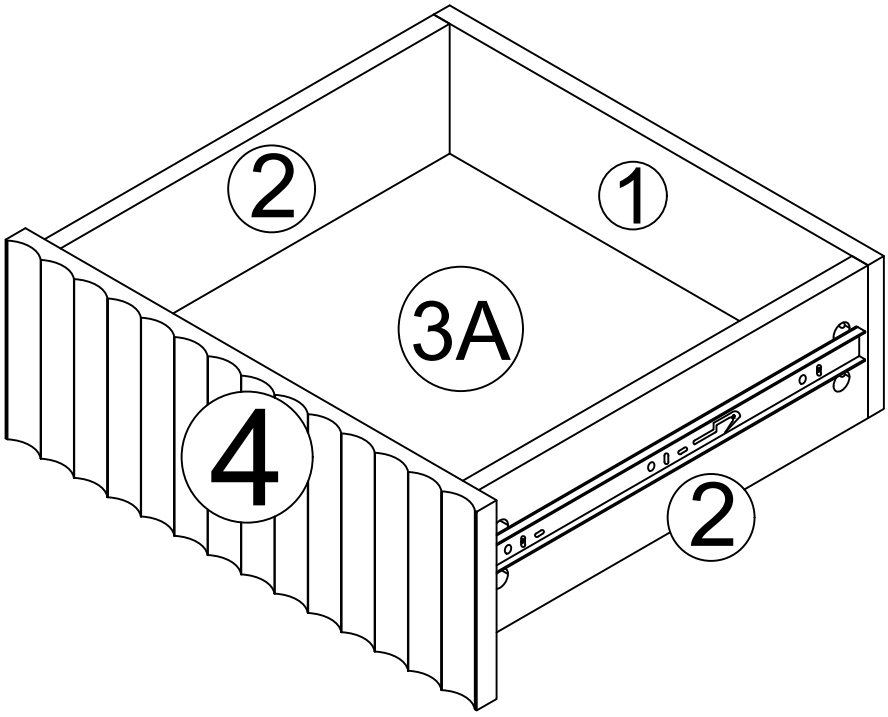

x2

The installation method for
the other drawer is the same

A		42pcs	G		4pcs / 8pcs
B		35pcs	C		16pcs
I		2pcs / 1pcs	F		4pcs

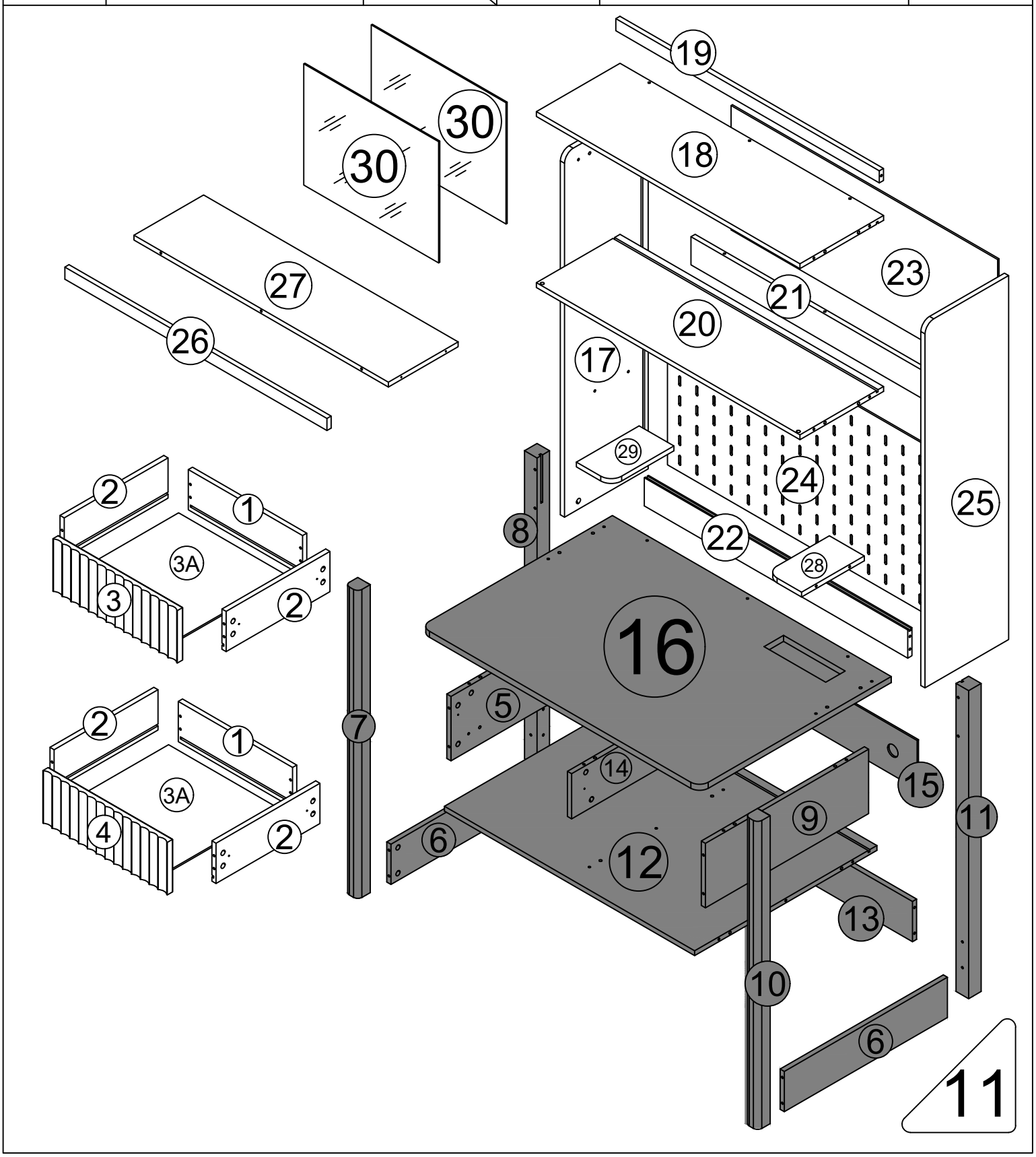

Step 9

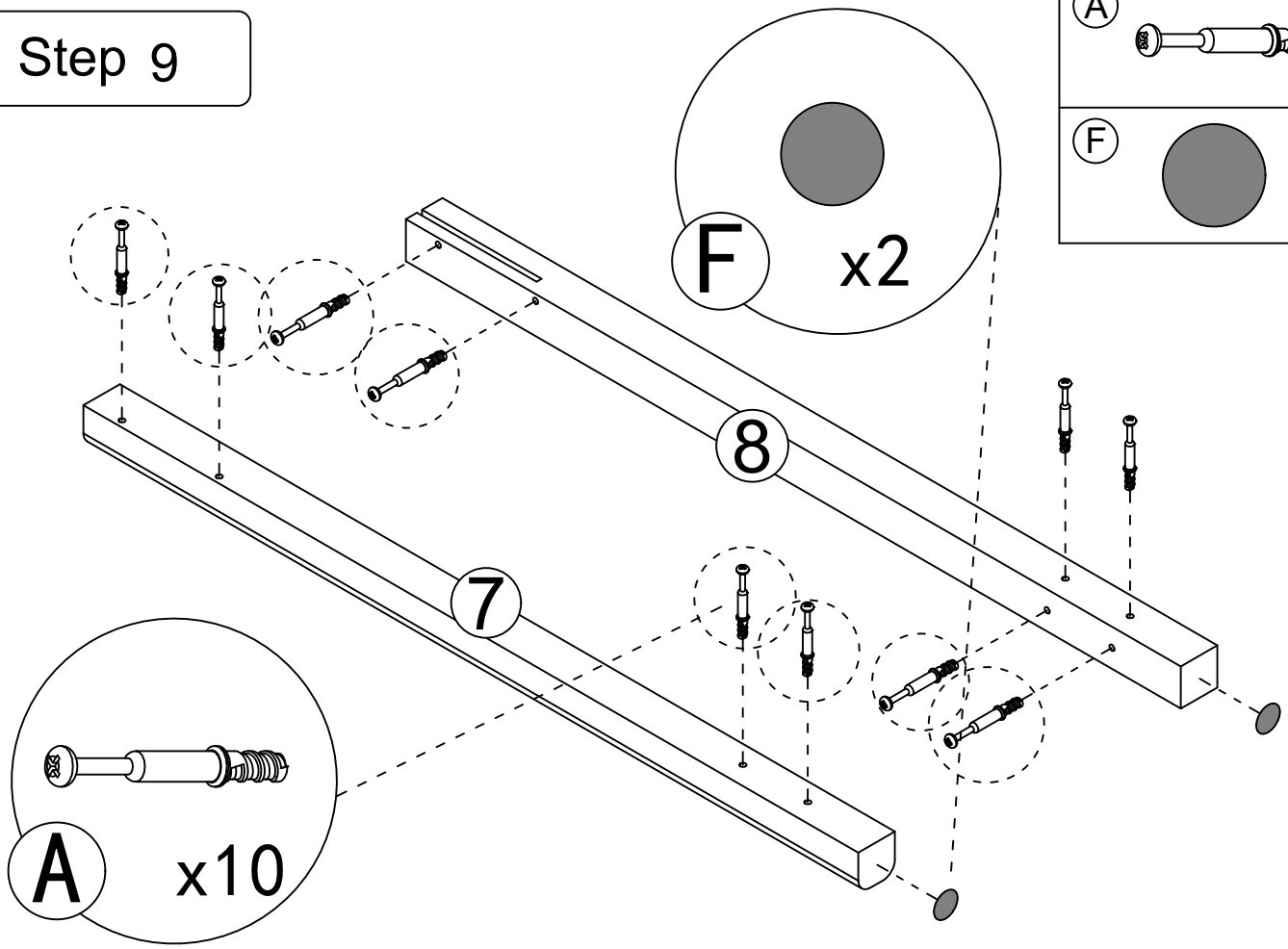

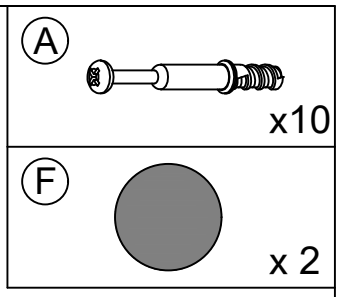

Step 10

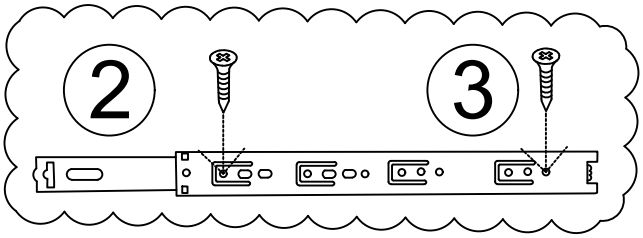

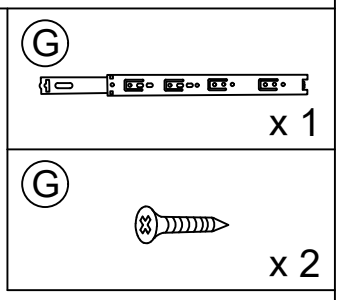

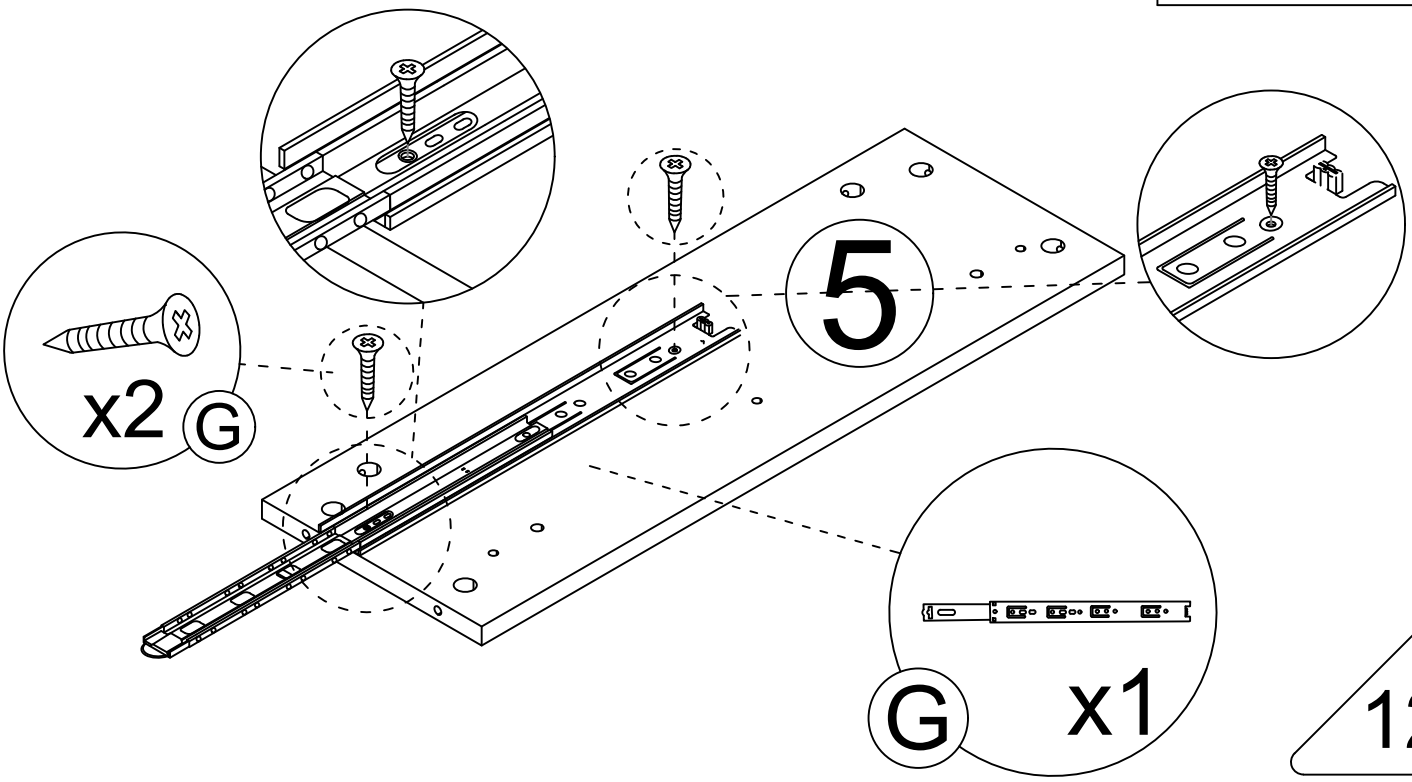

Step 11

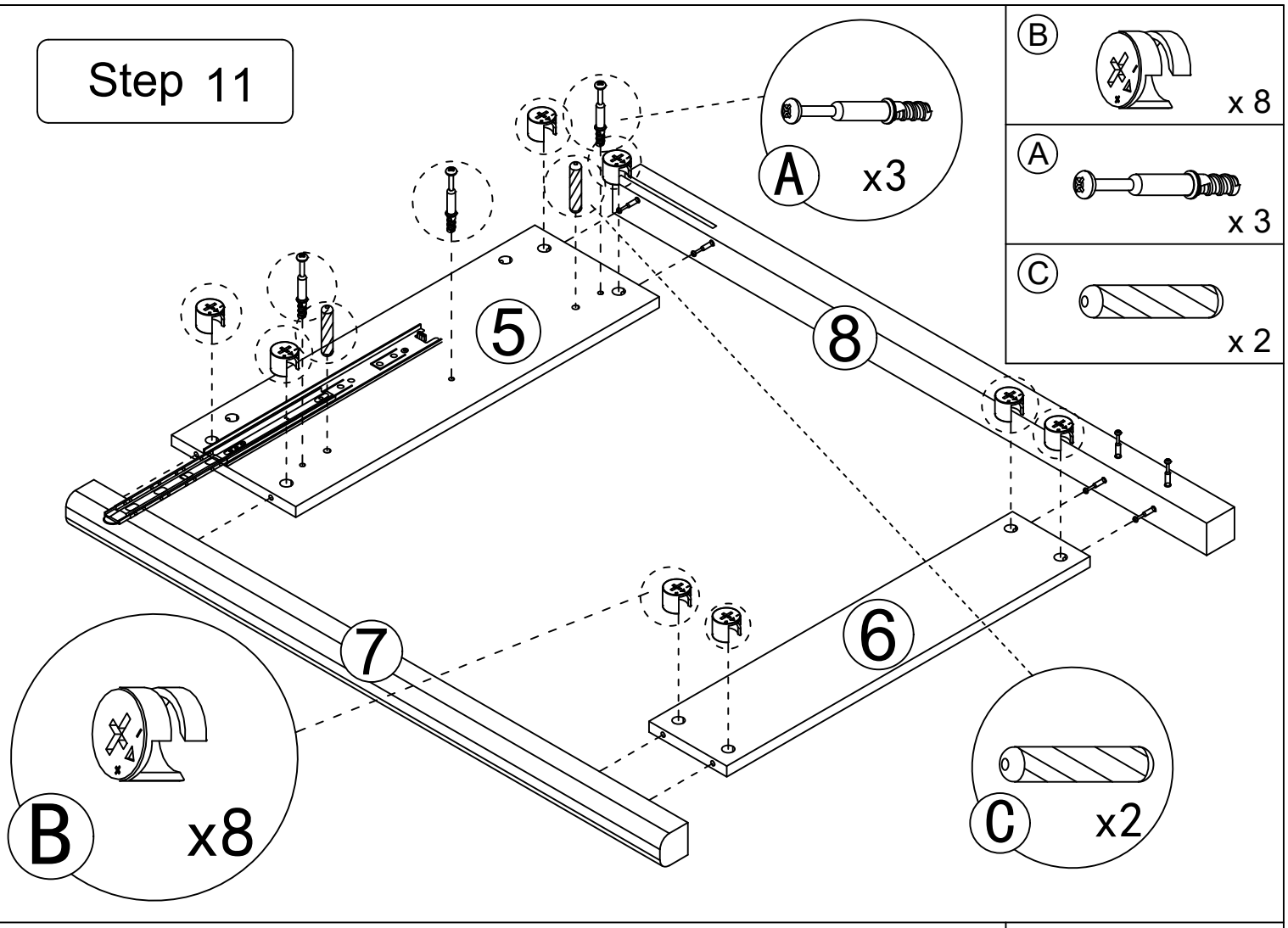

Step 12

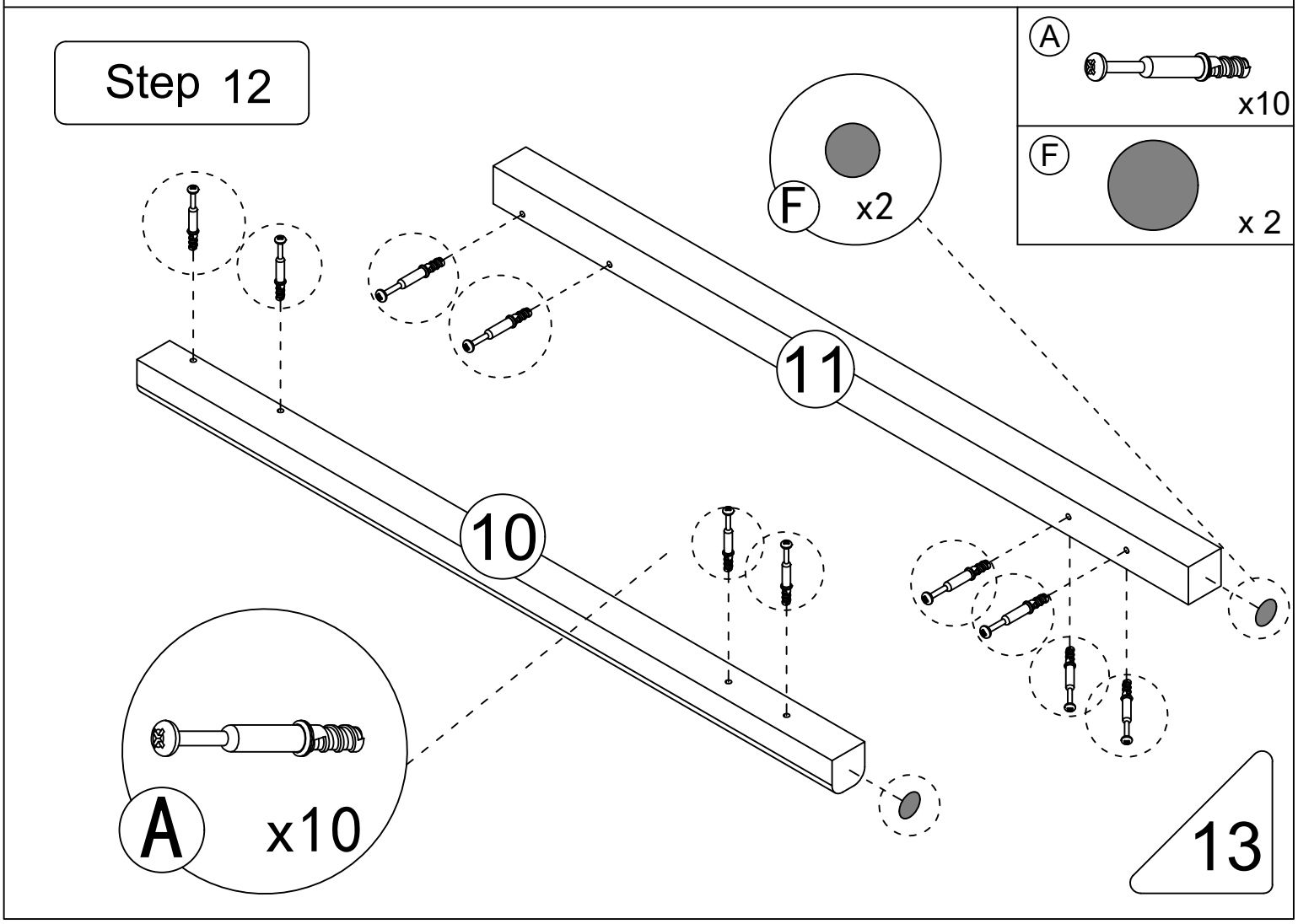

Step 13

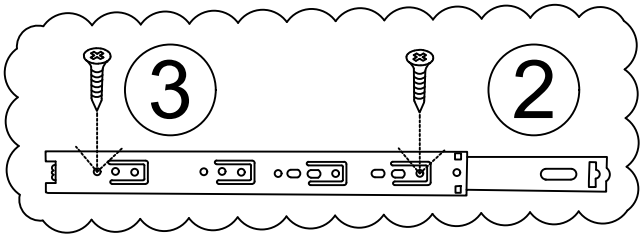

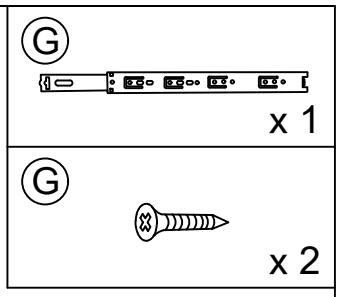

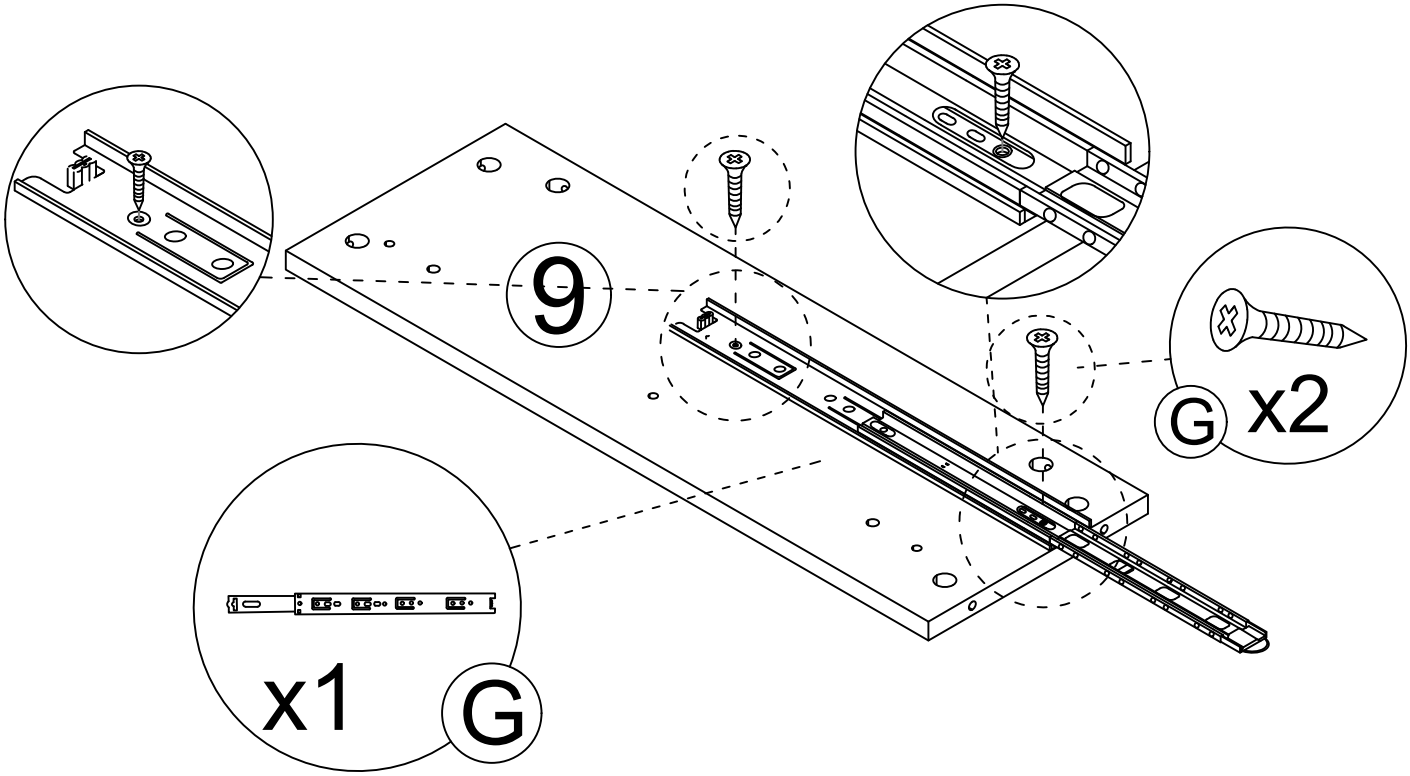

Step 14

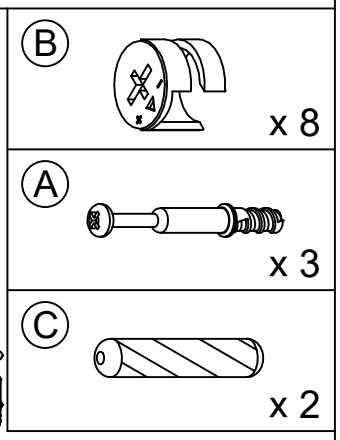

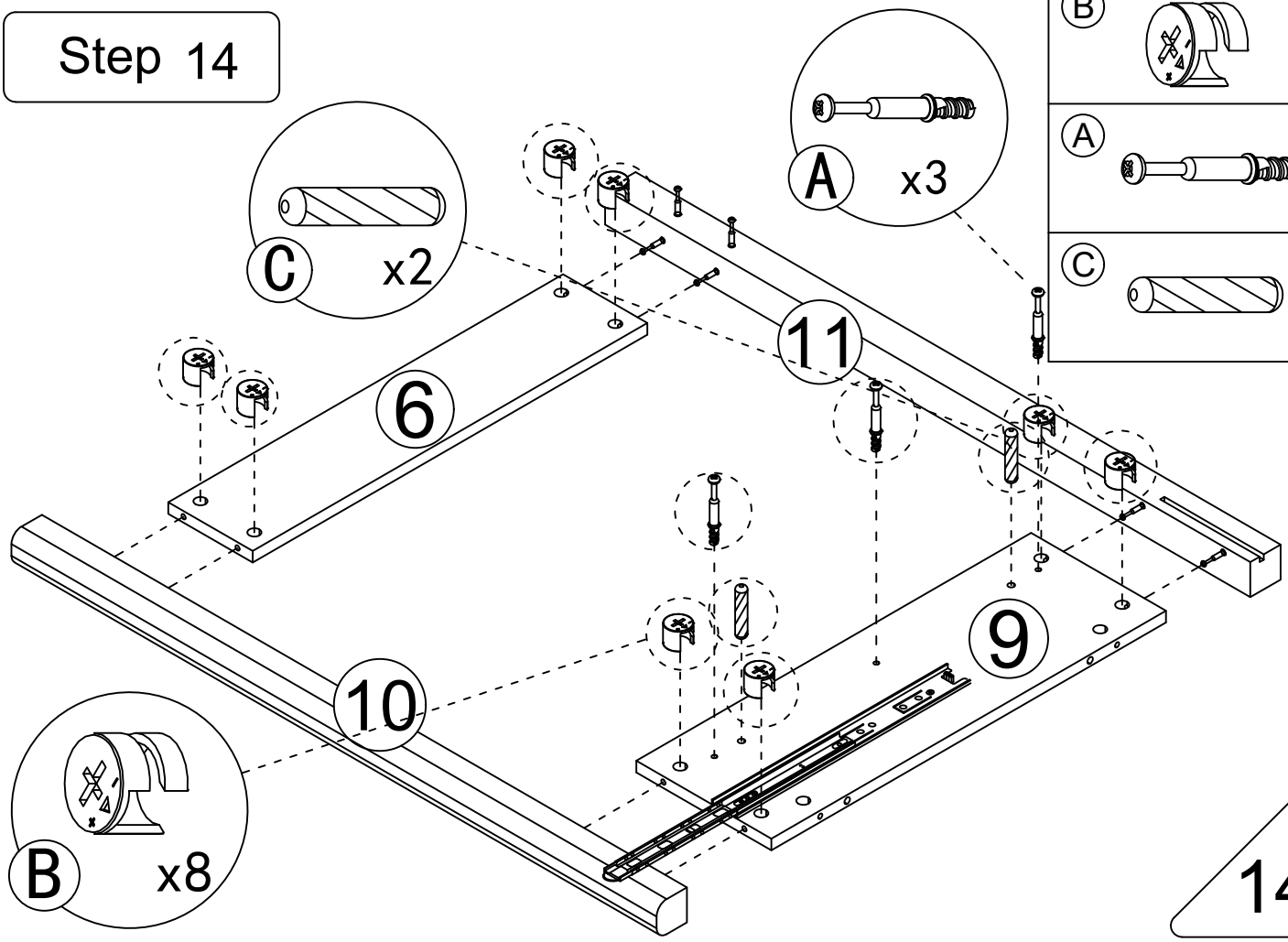

Step 15

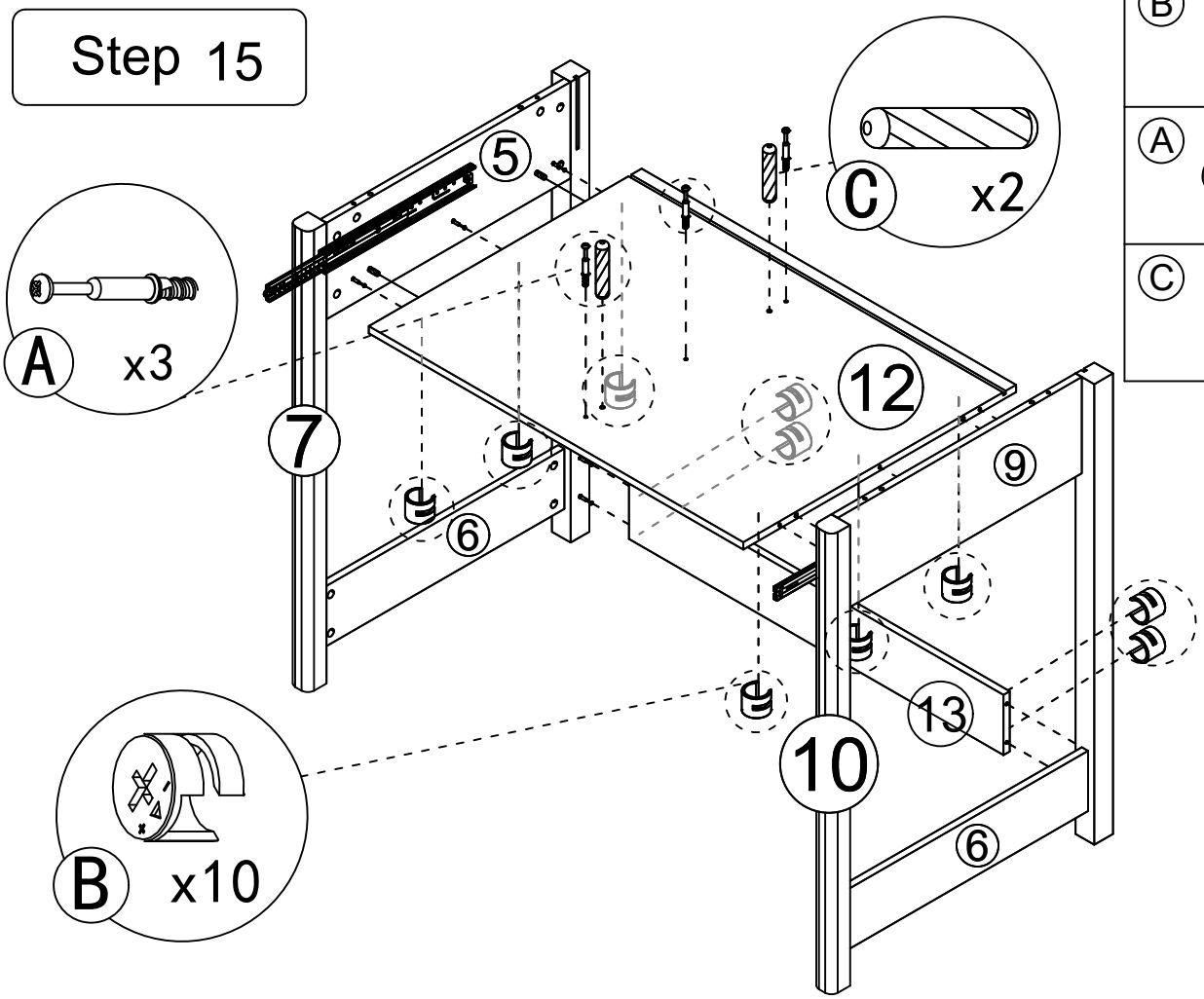

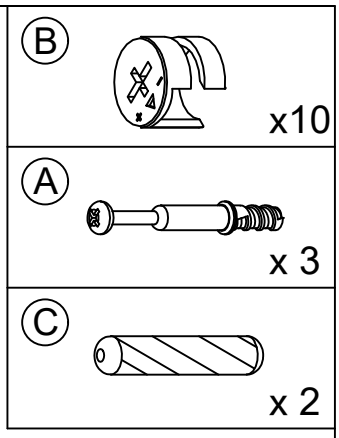

Step 16

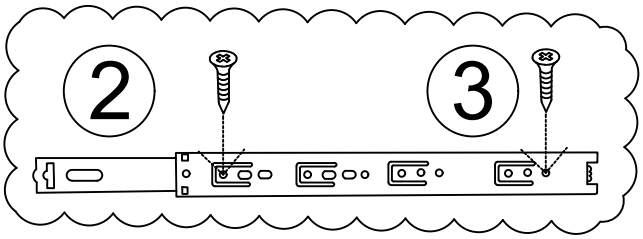

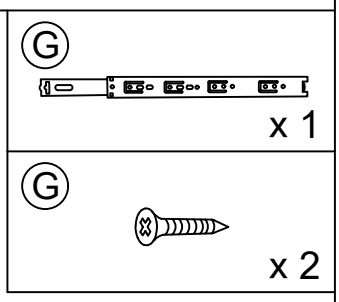

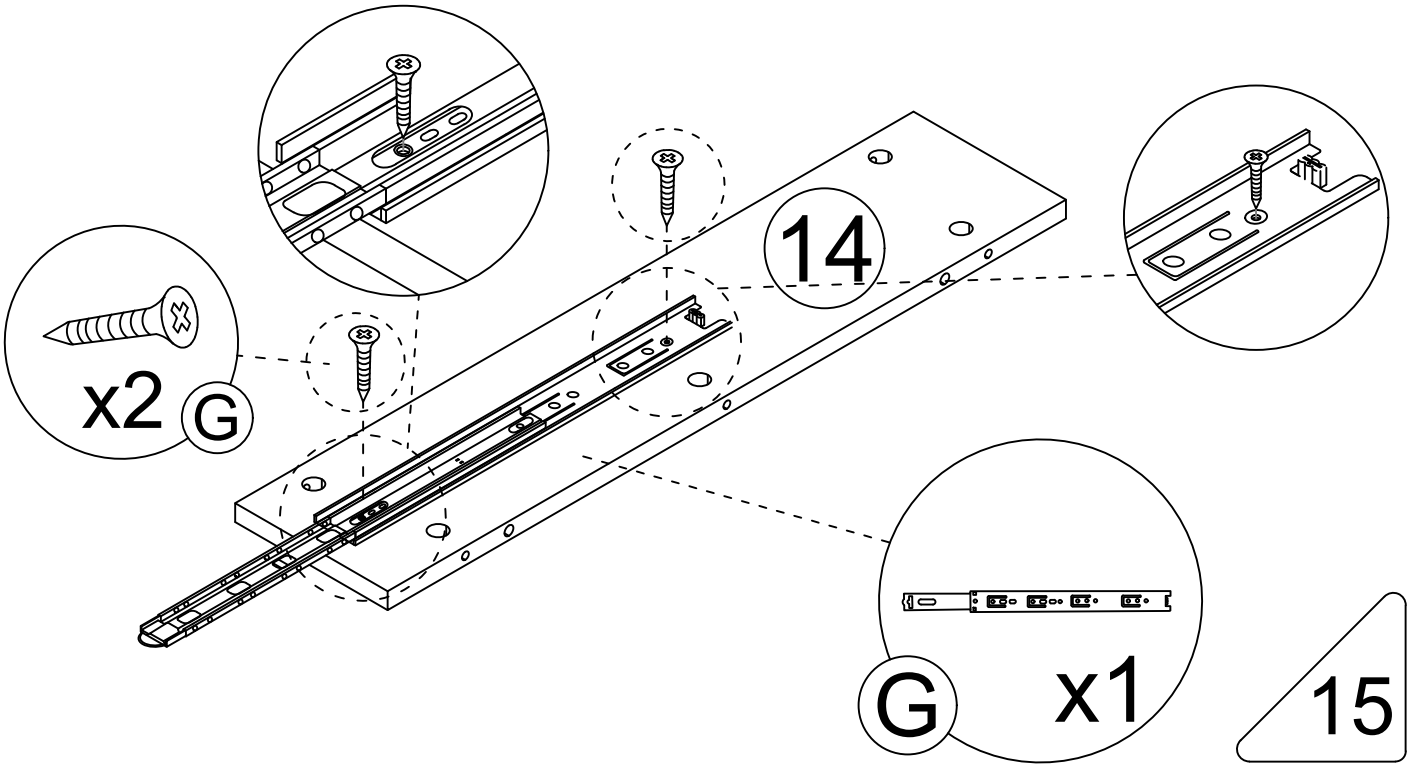

Step 17

Flip it over

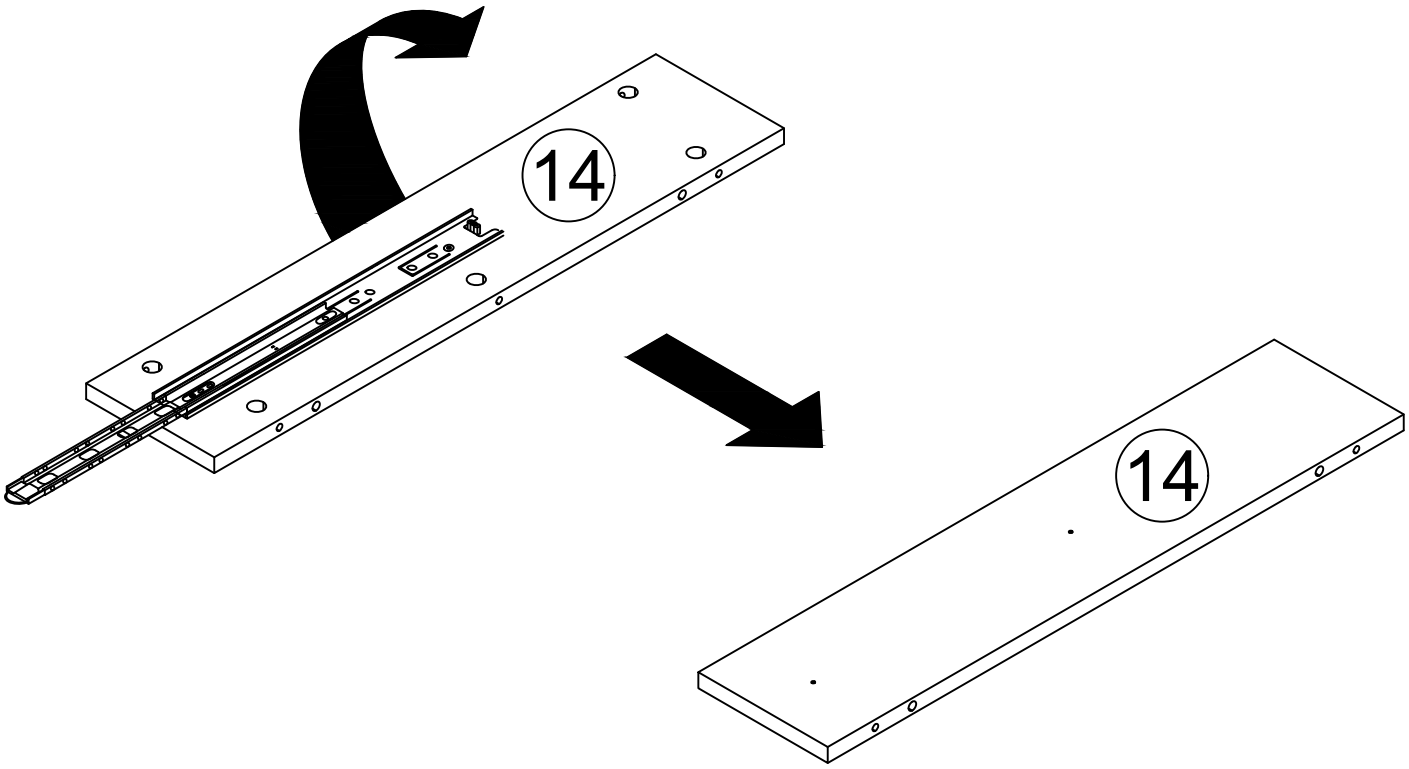

Step 18

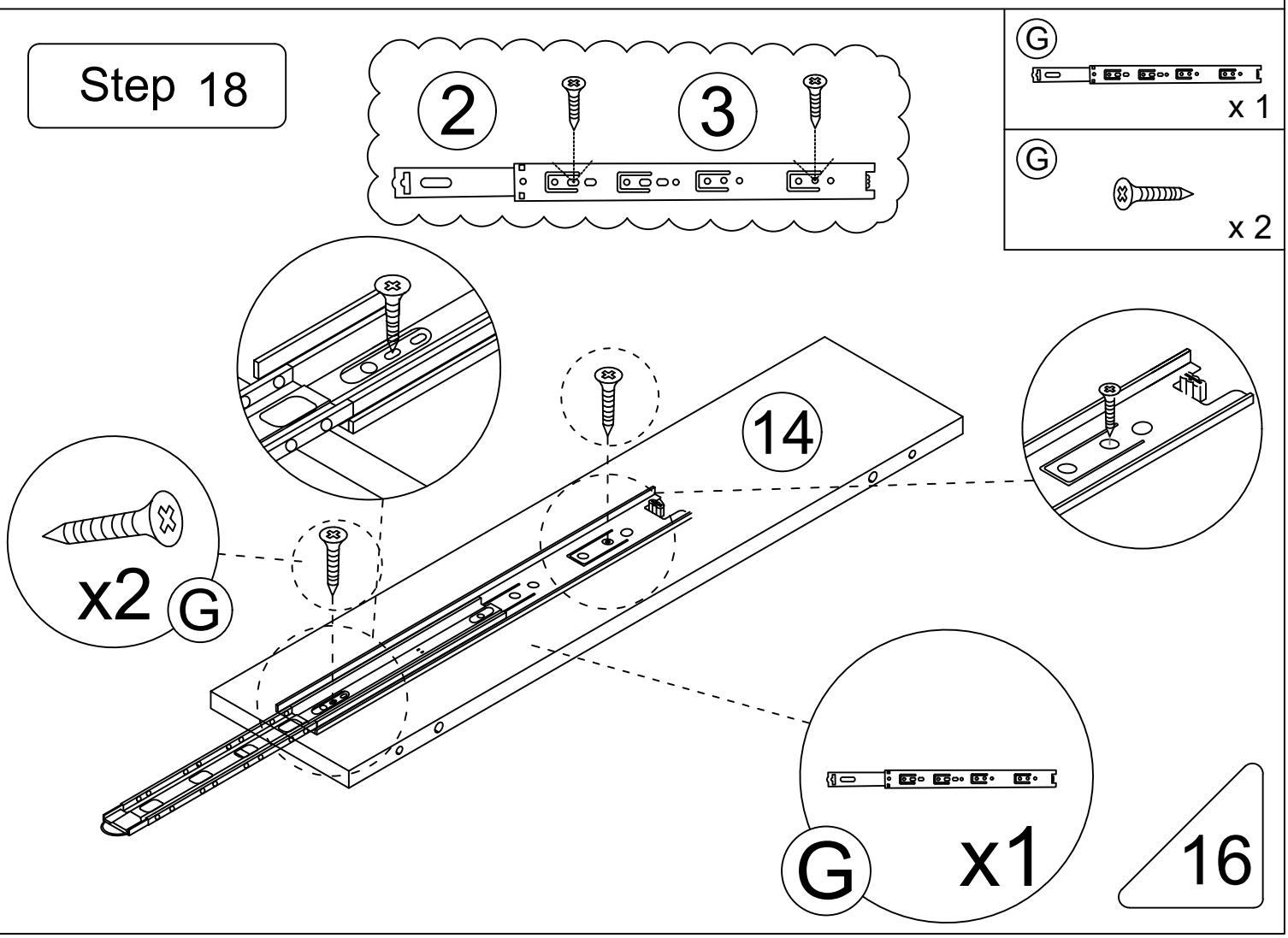

Step 19

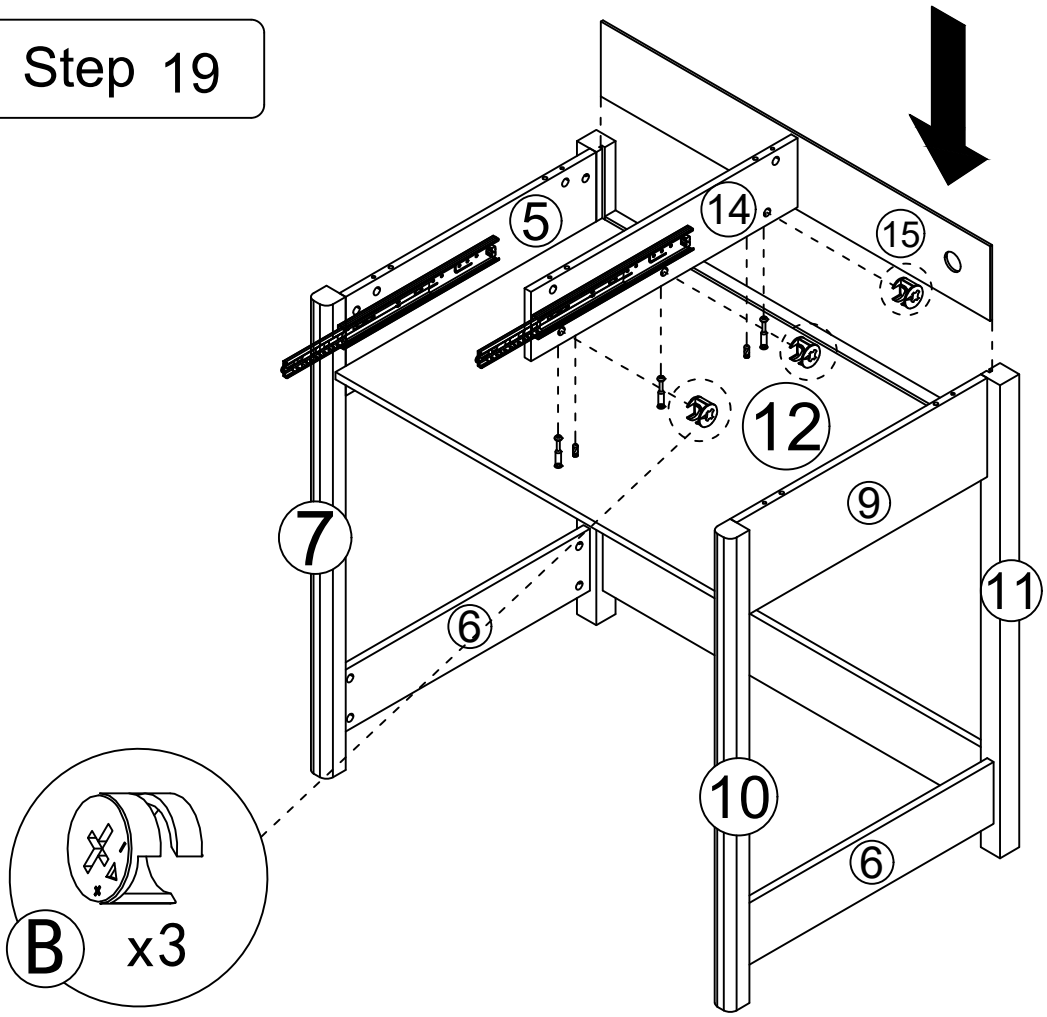

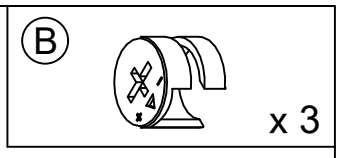

Step 20

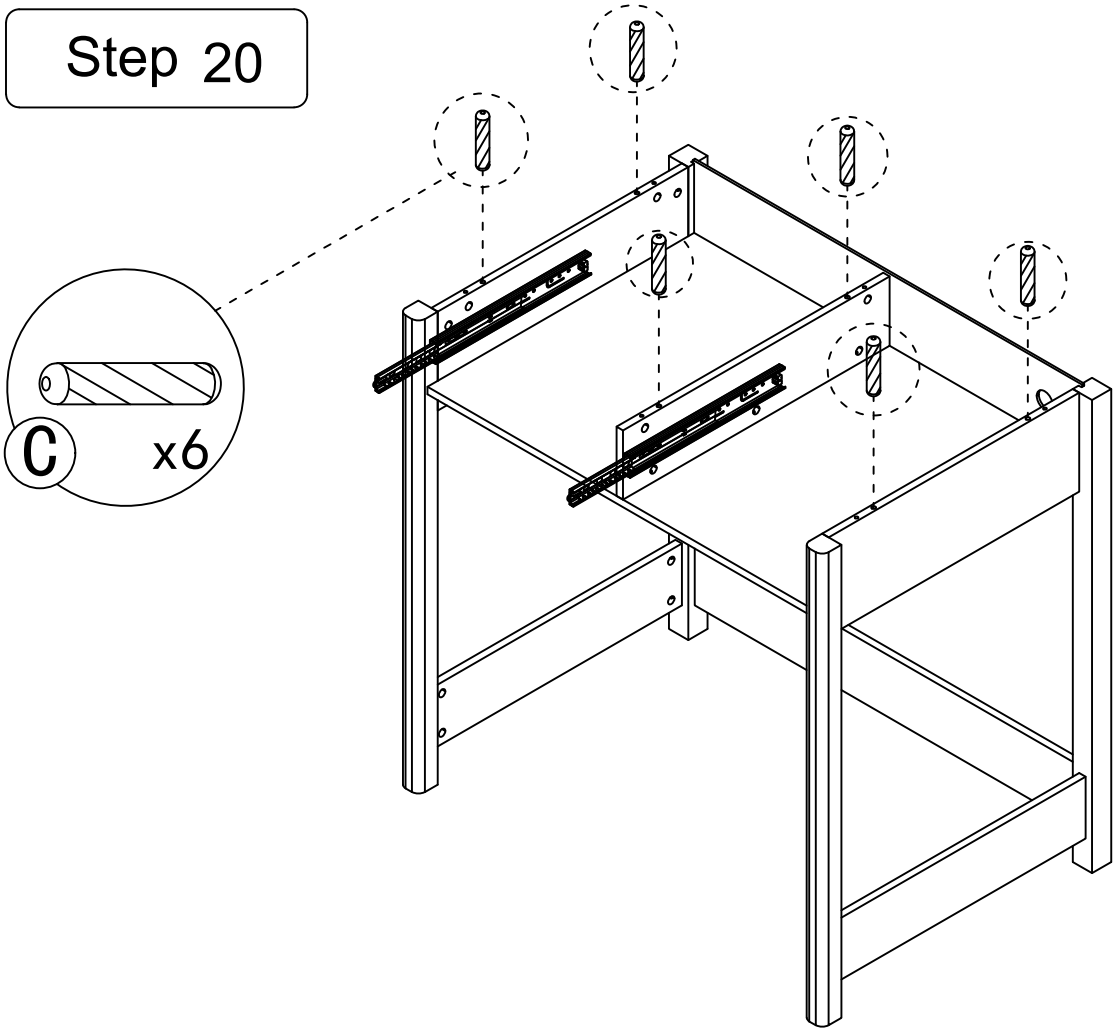

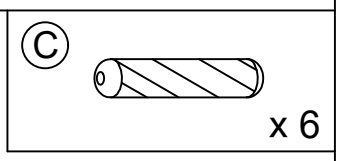

Step 21

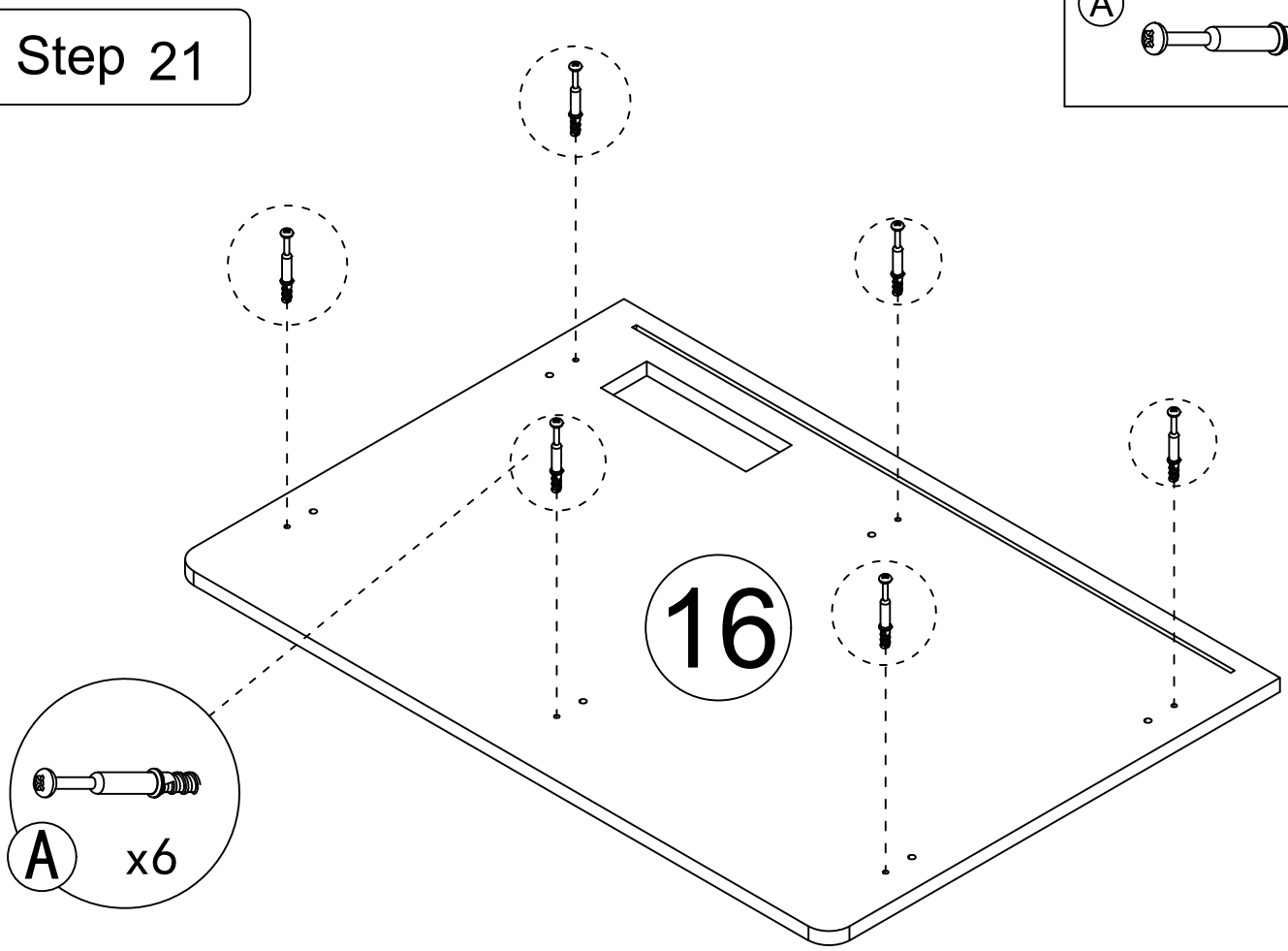

Step 22

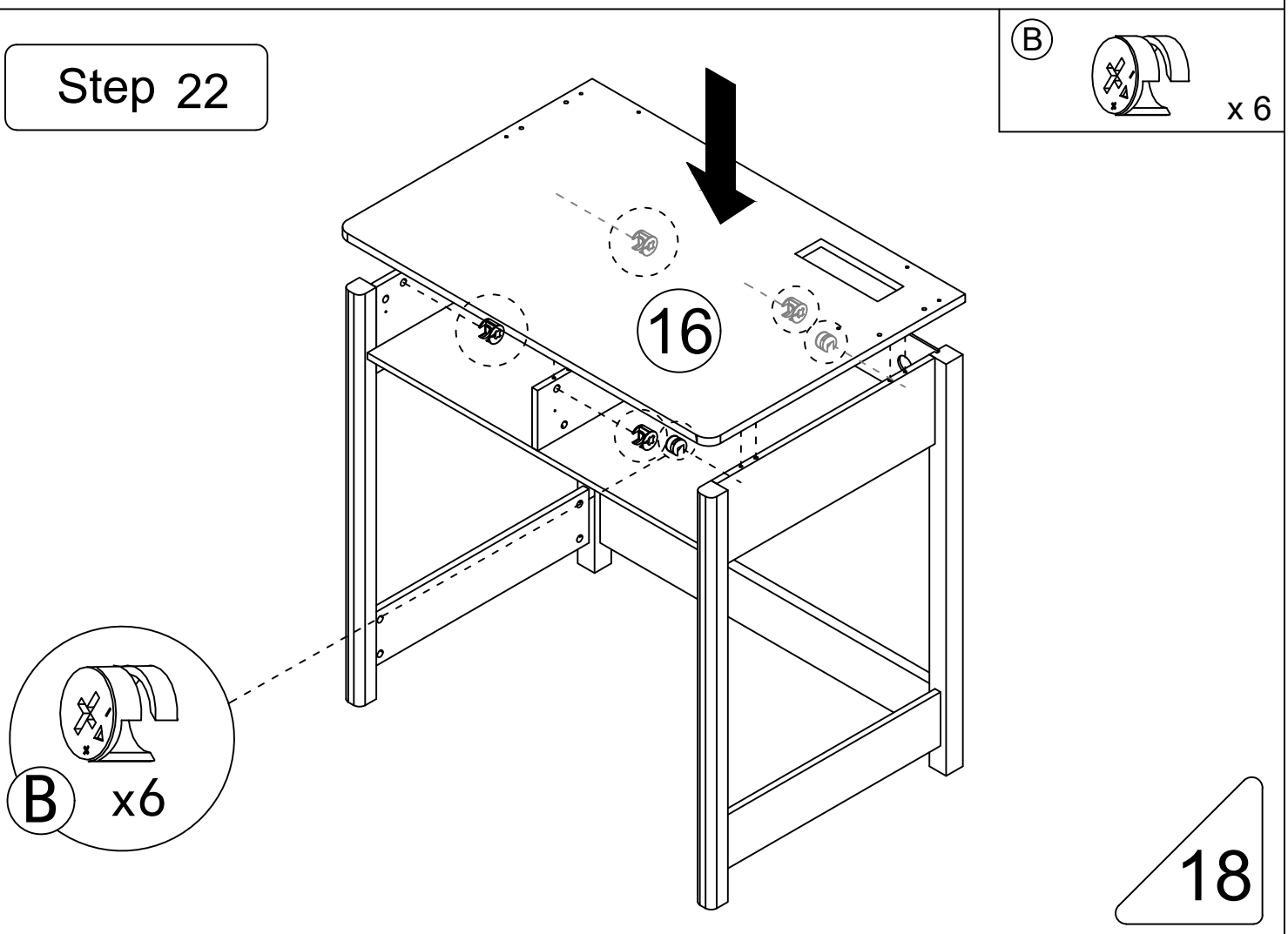

Step 23

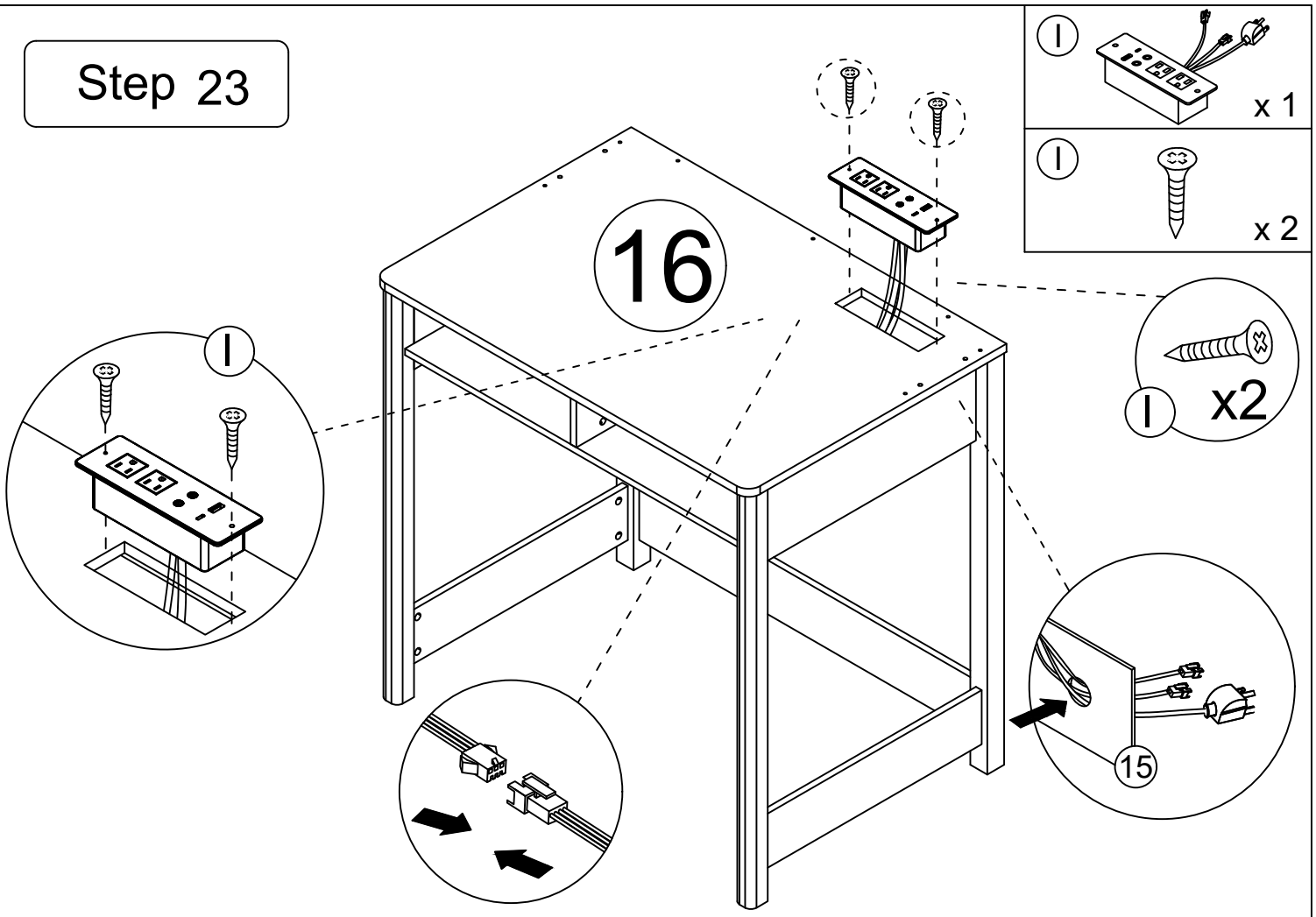

Step 24

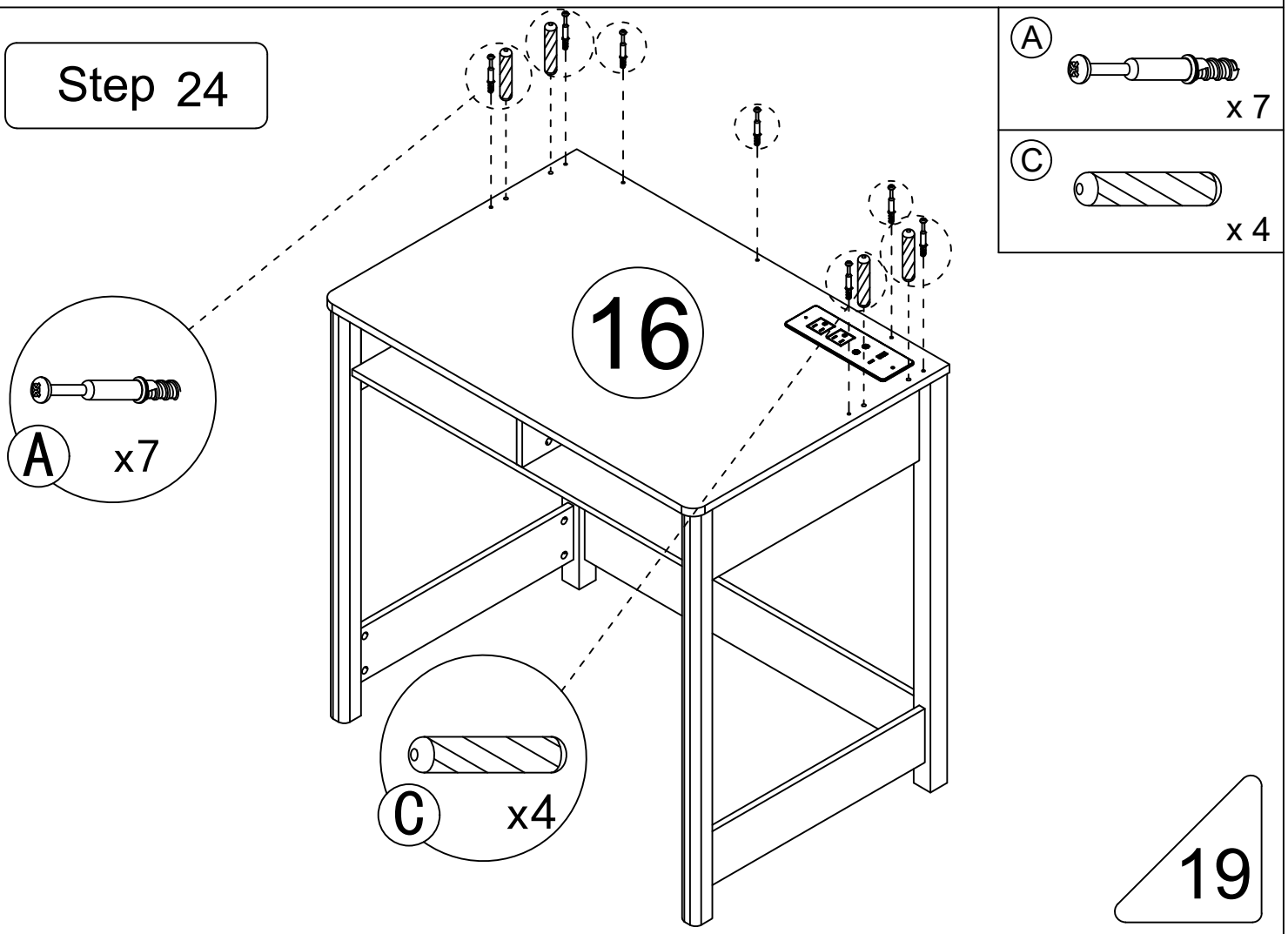

A		31pcs	H		2pcs / 8pcs
B		38pcs	C		8pcs
D		2pcs / 1pcs / 2pcs	E		16pcs
J		2pcs / 4pcs +1pcs / 2pcs / 2pcs / 2pcs / 4pcs	K	x2 / x2 / (3.5x14mm) x2 / x4 / x2 (4x45mm)	

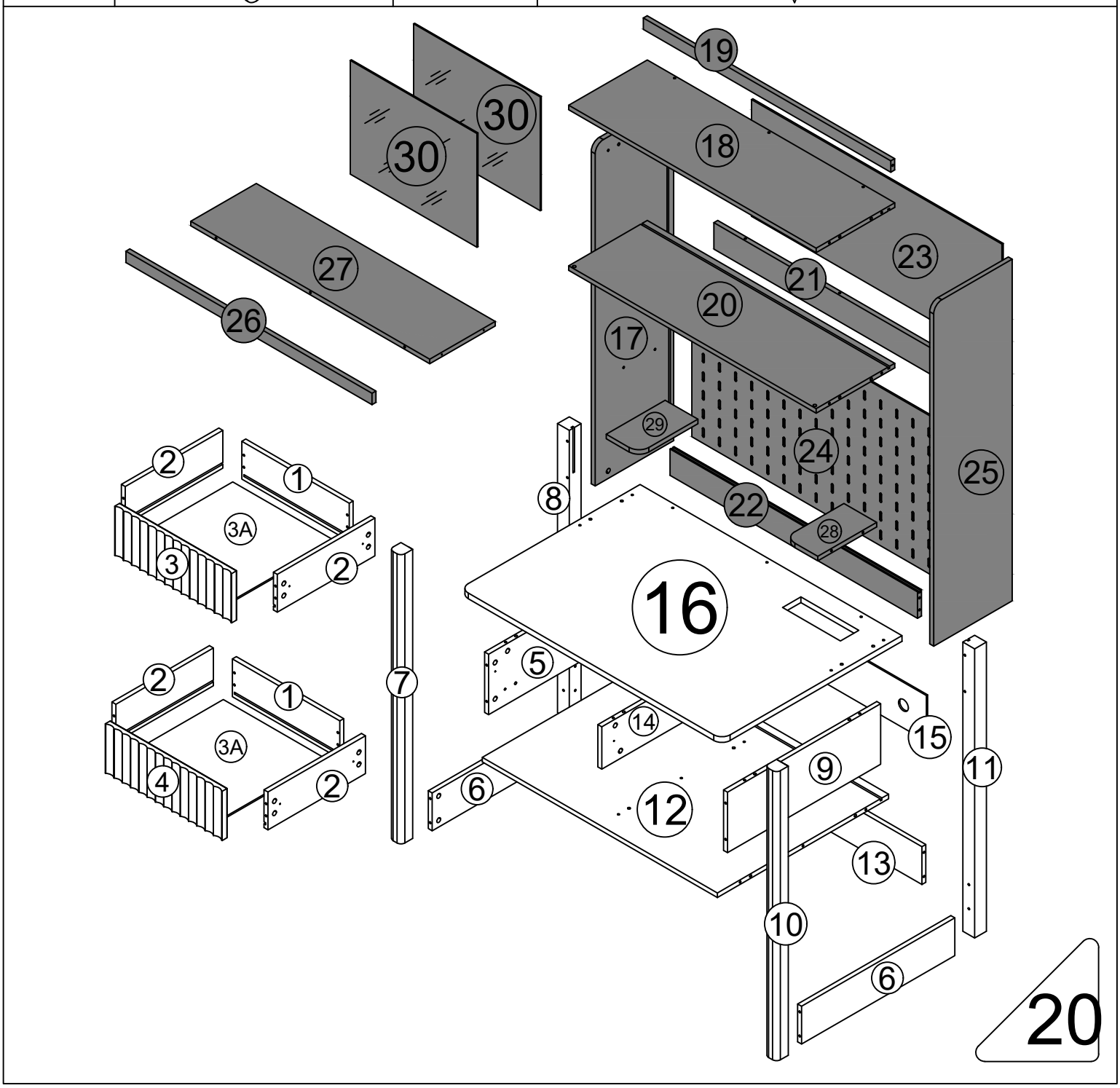

Step 25

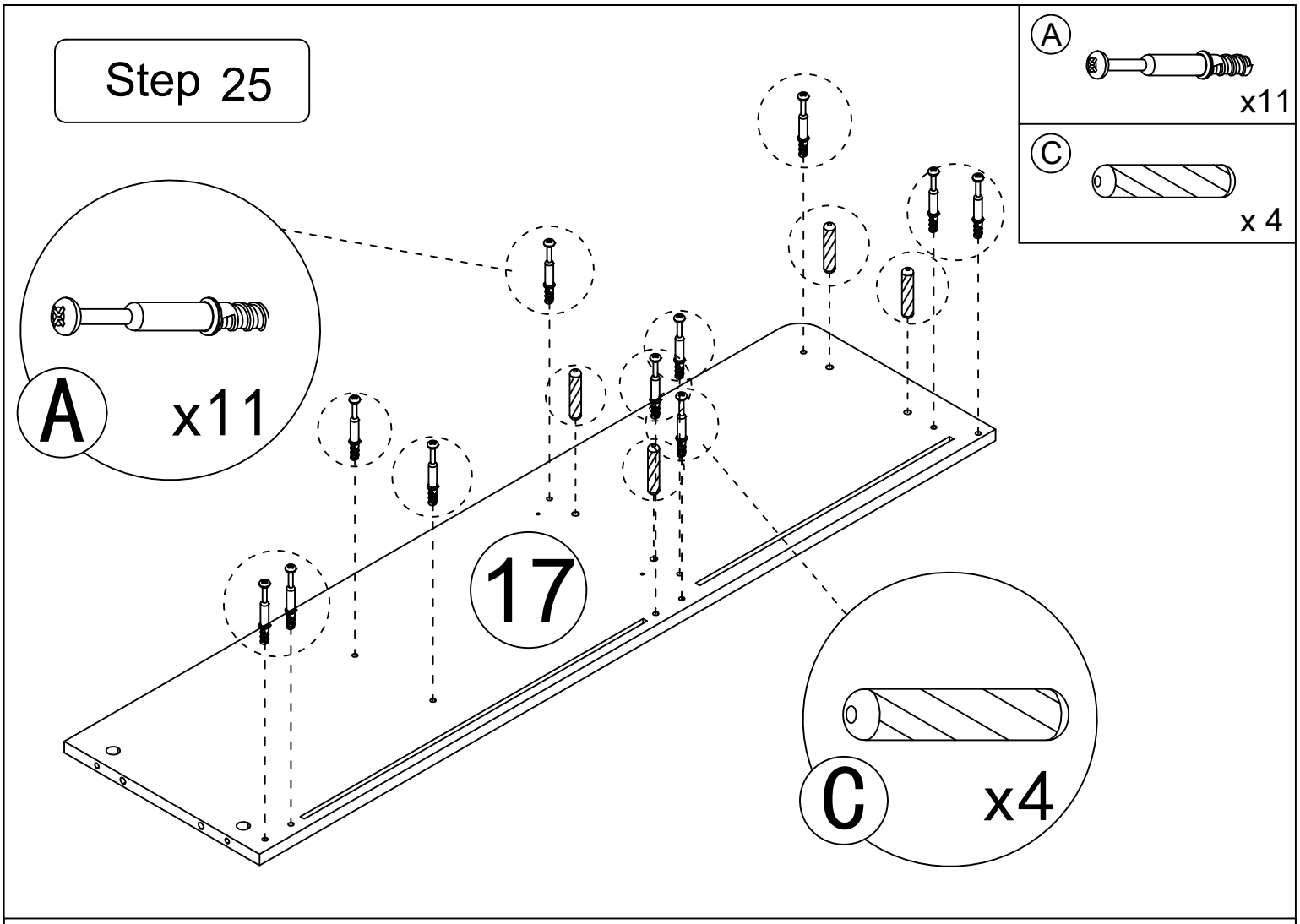

Drawer rail breakdown diagram

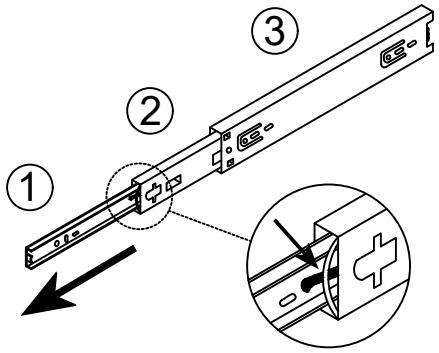

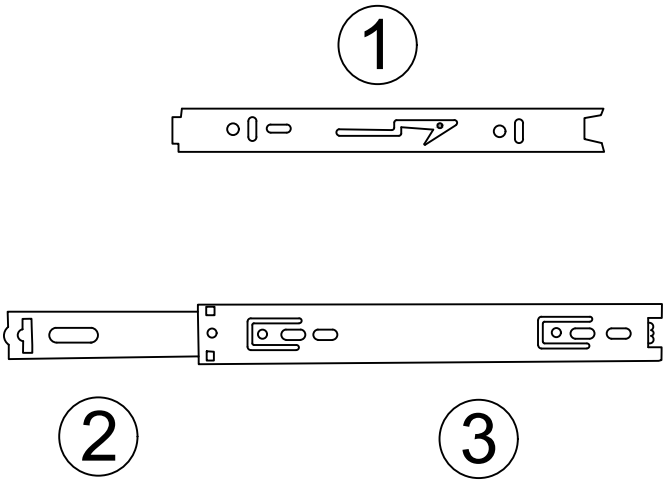

Step 1 : Pull the rails apart

Step 2 : Push the nylon buckle outward ①

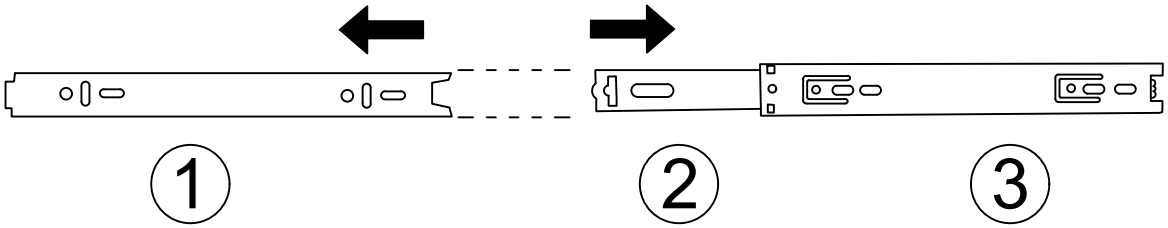

Step 26

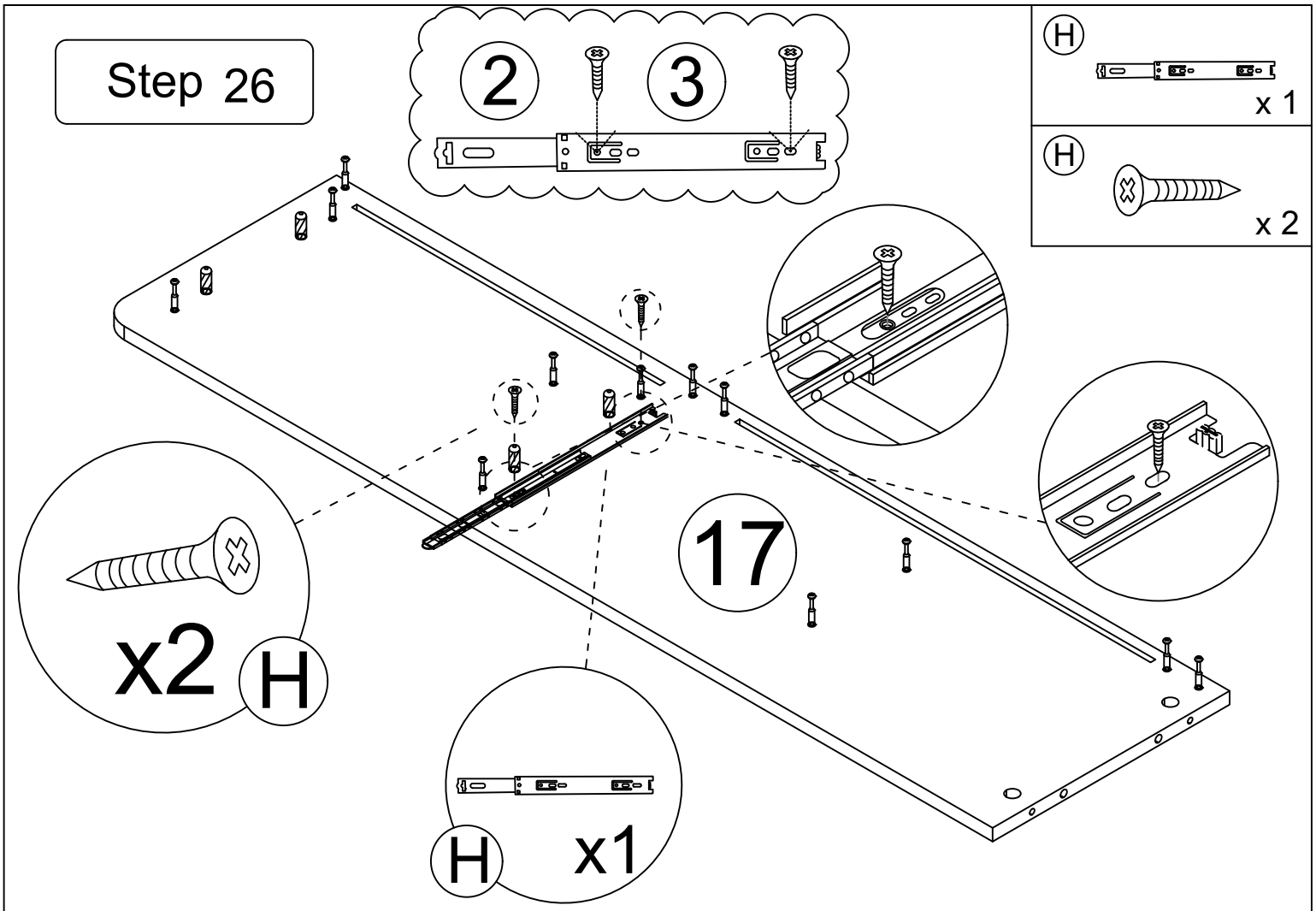

Step 27

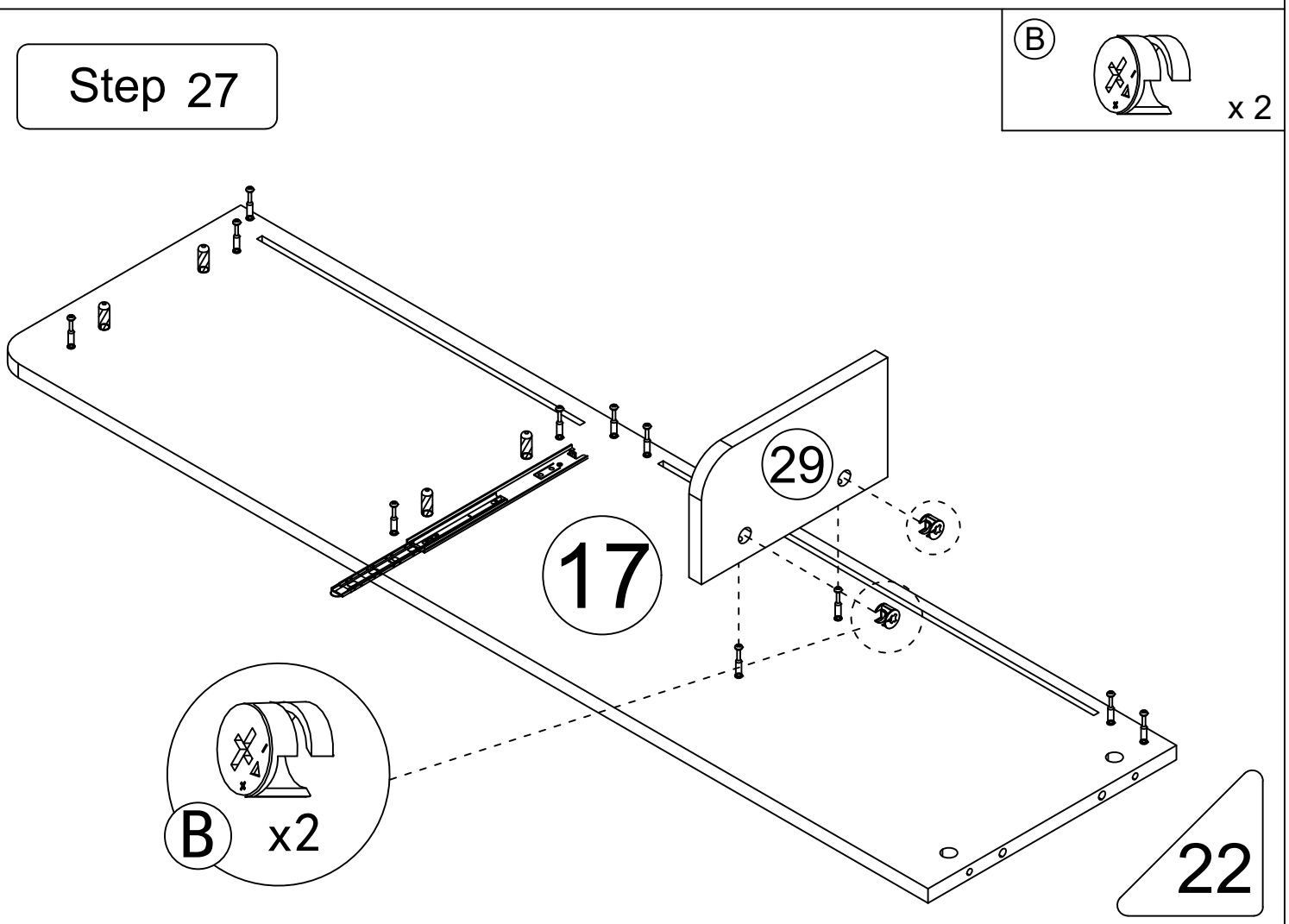

Step 28

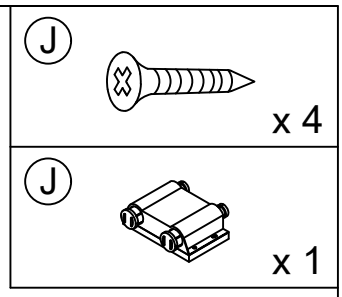

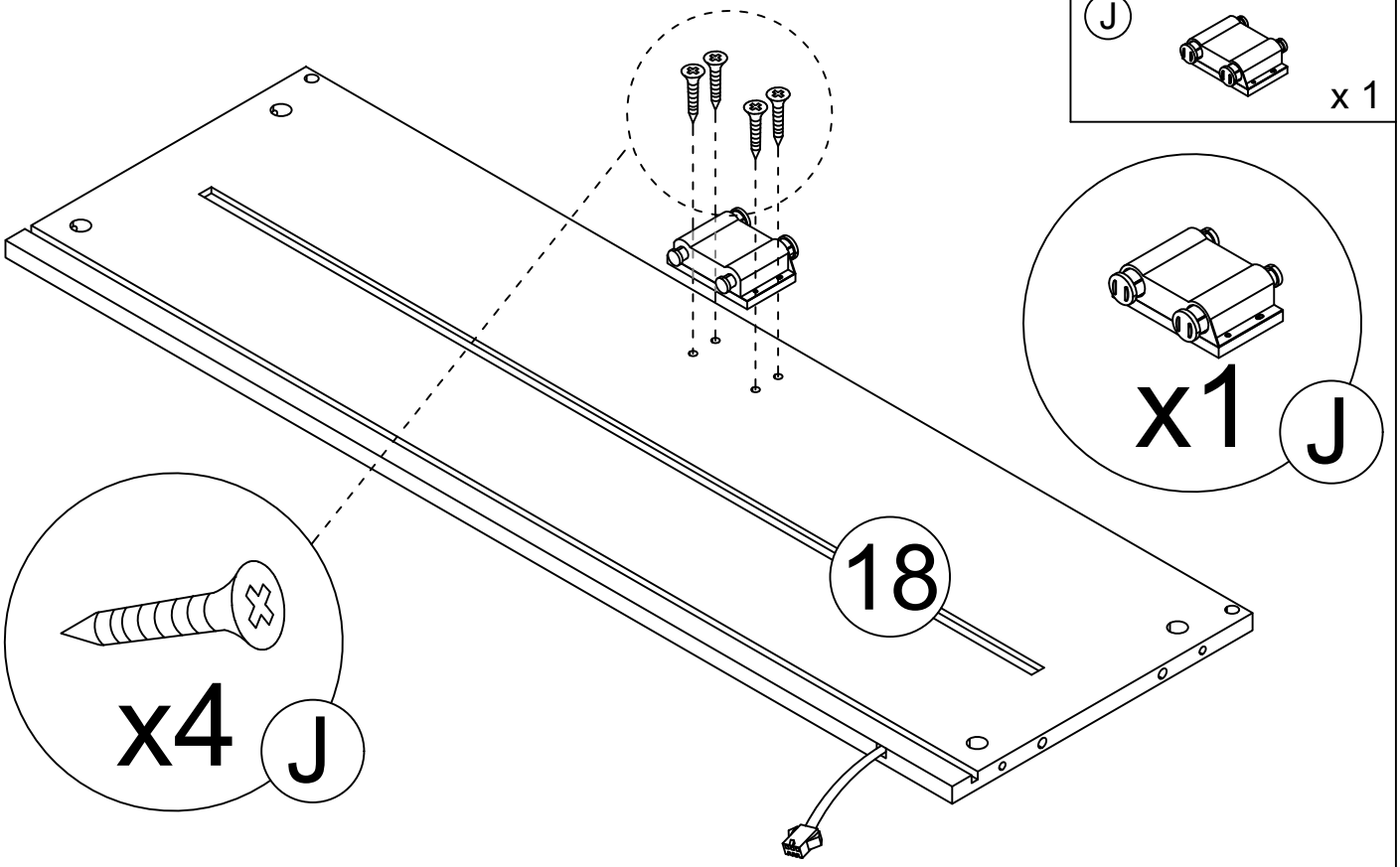

Step 29

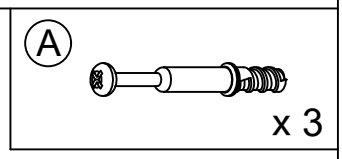

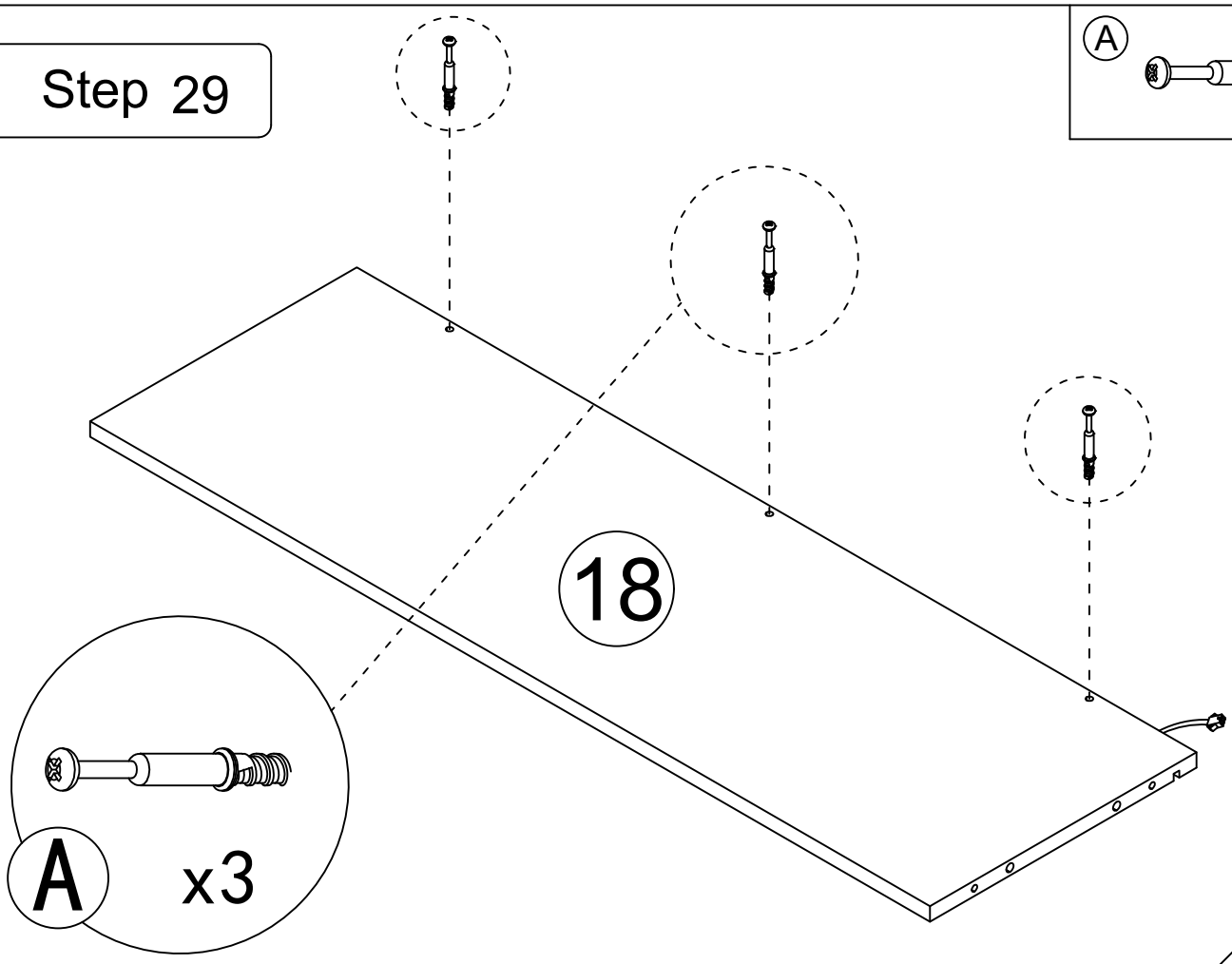

Step 30

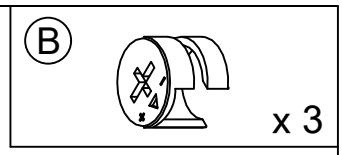

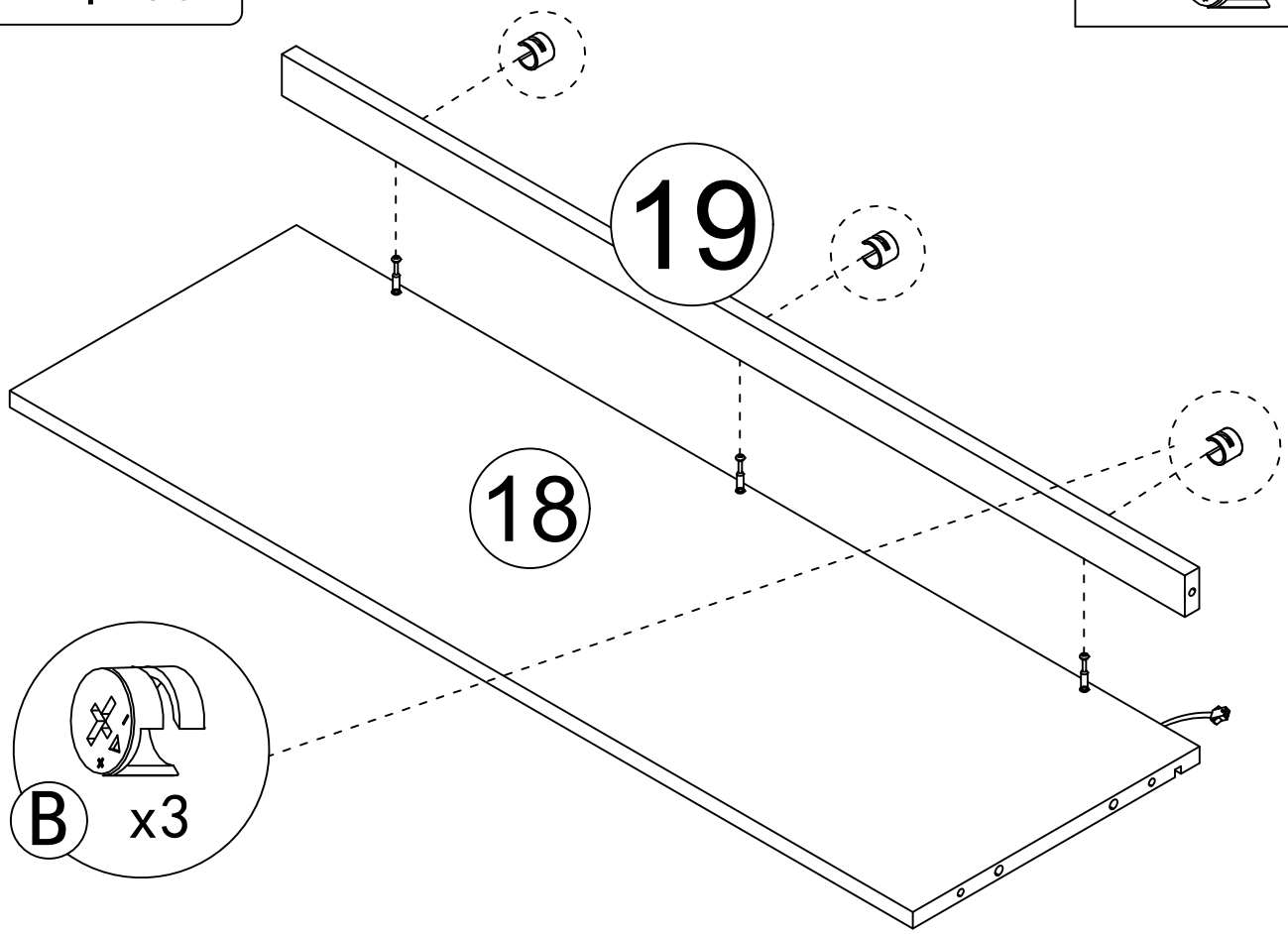

Step 31

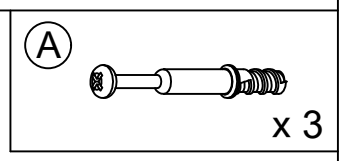

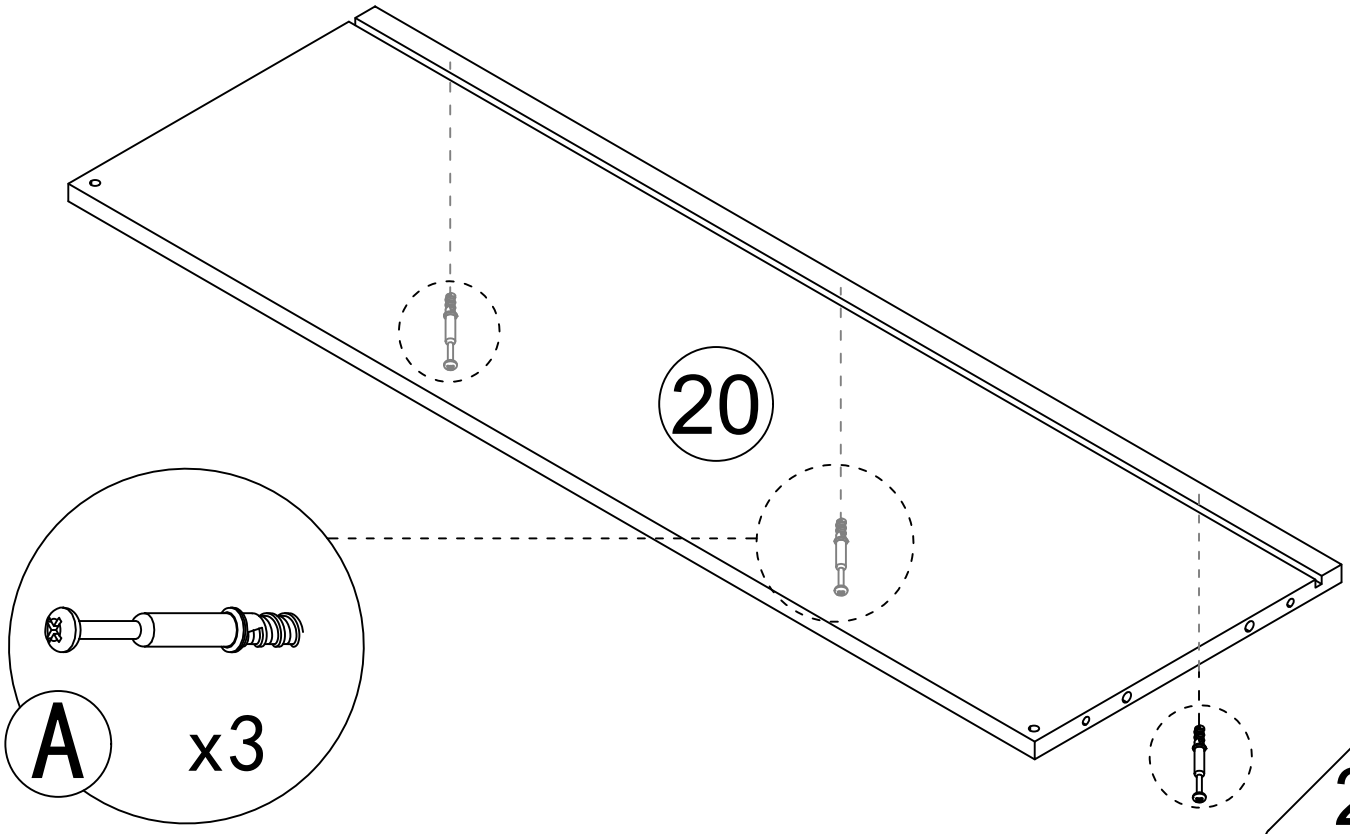

Step 32

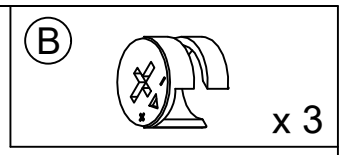

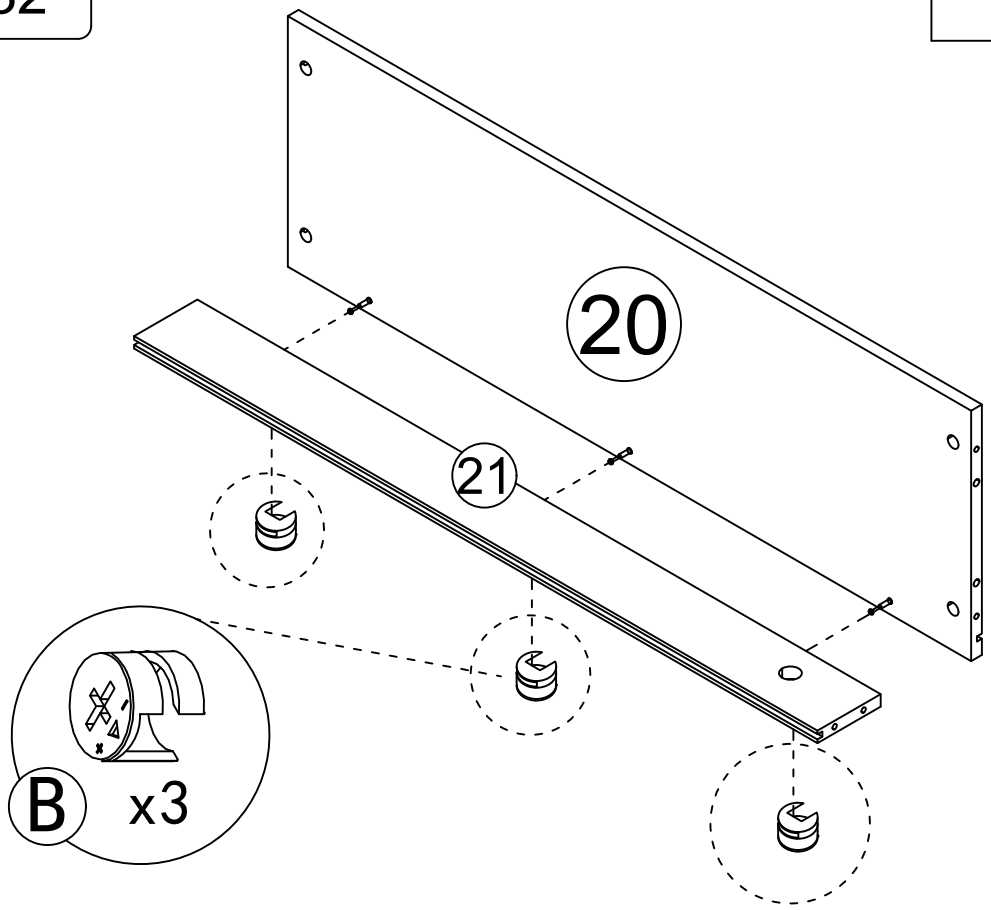

Step 33

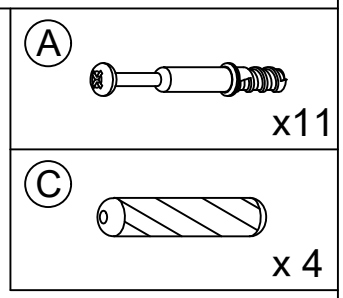

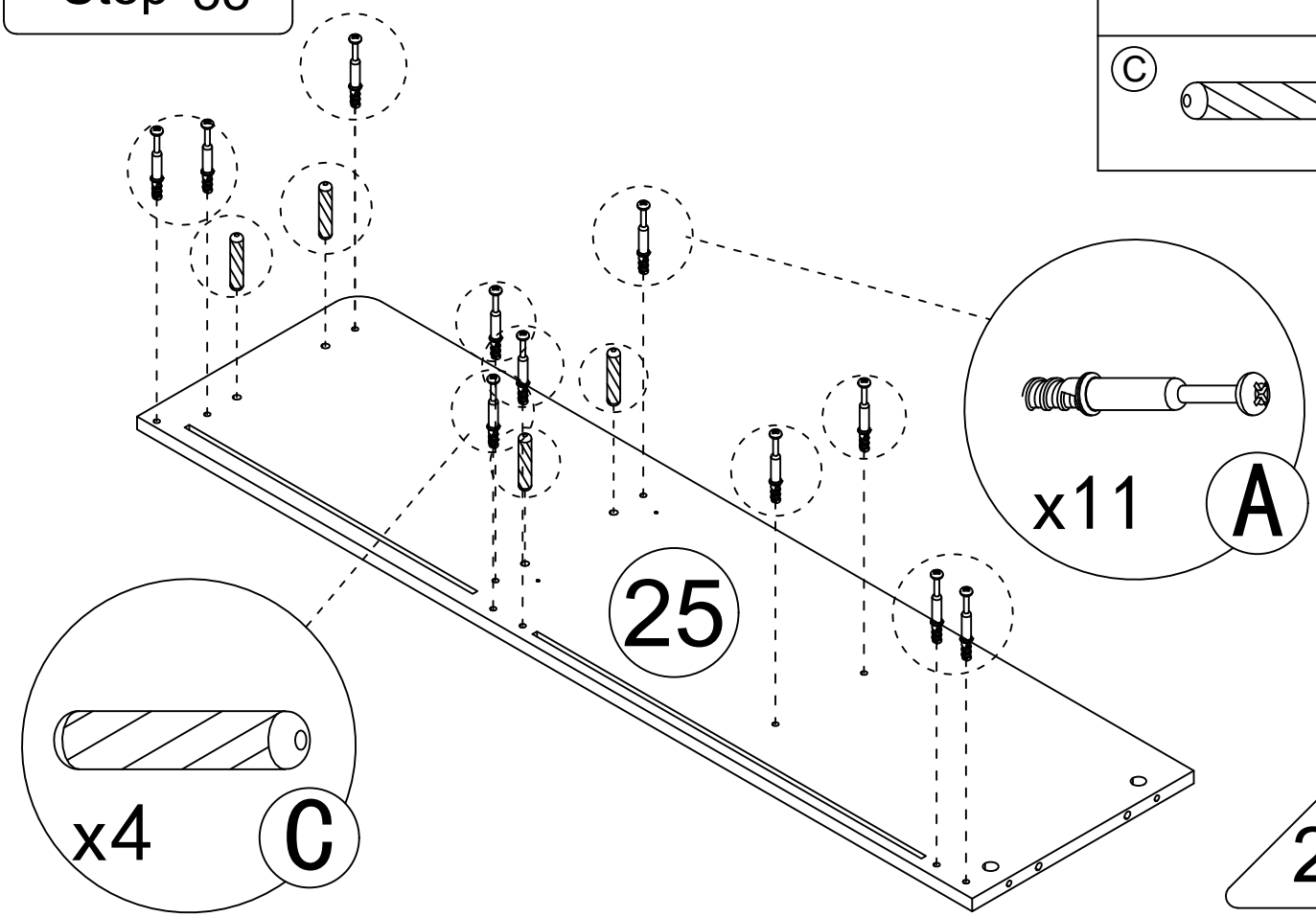

Step 34

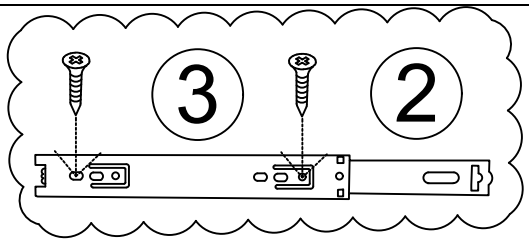

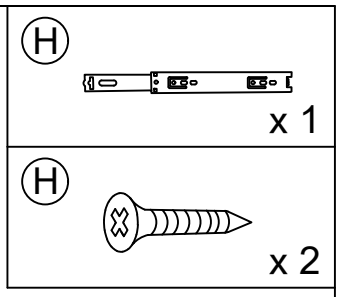

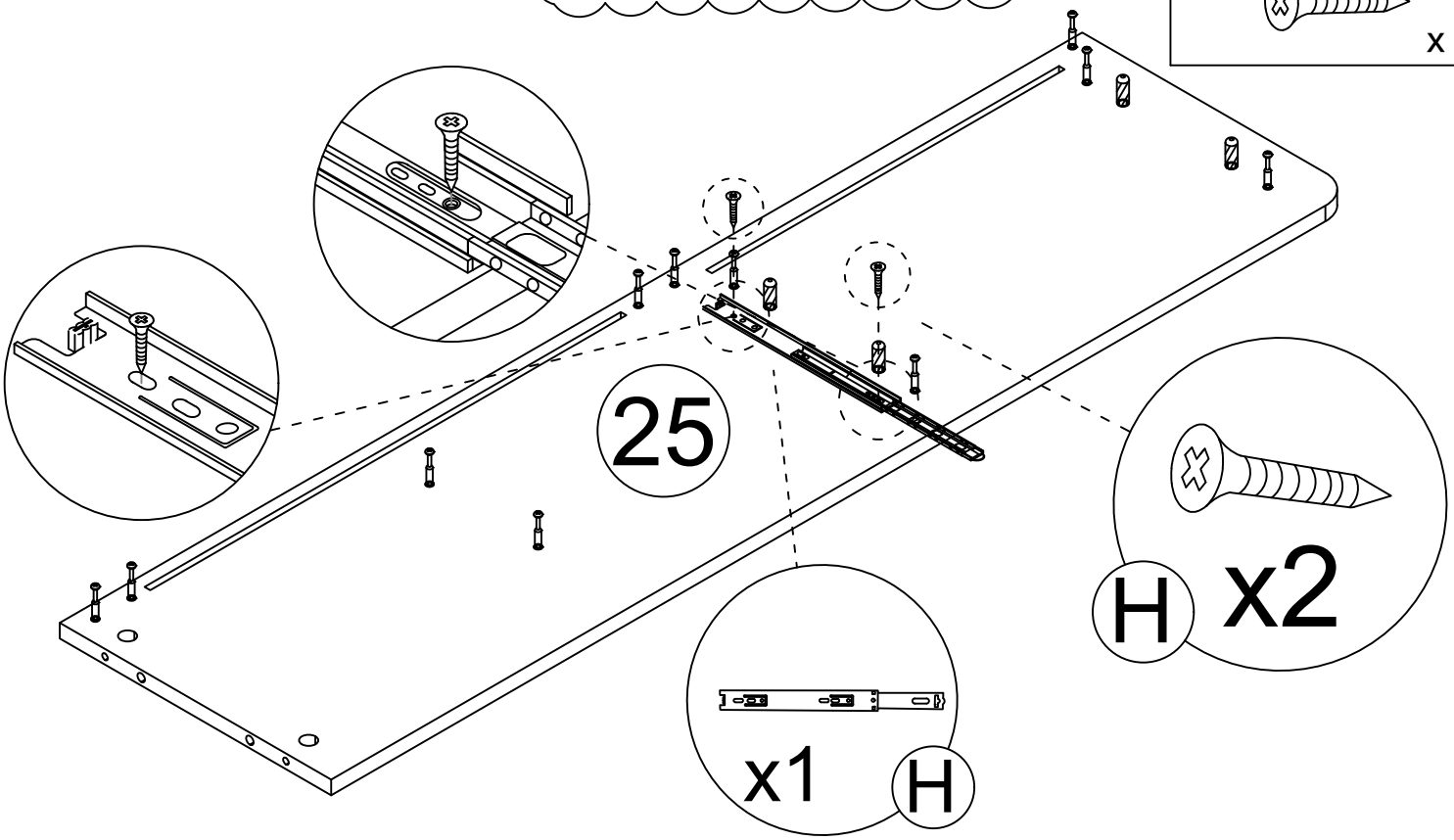

Step 35

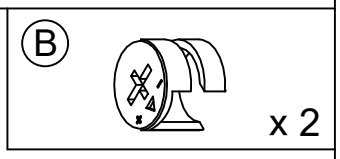

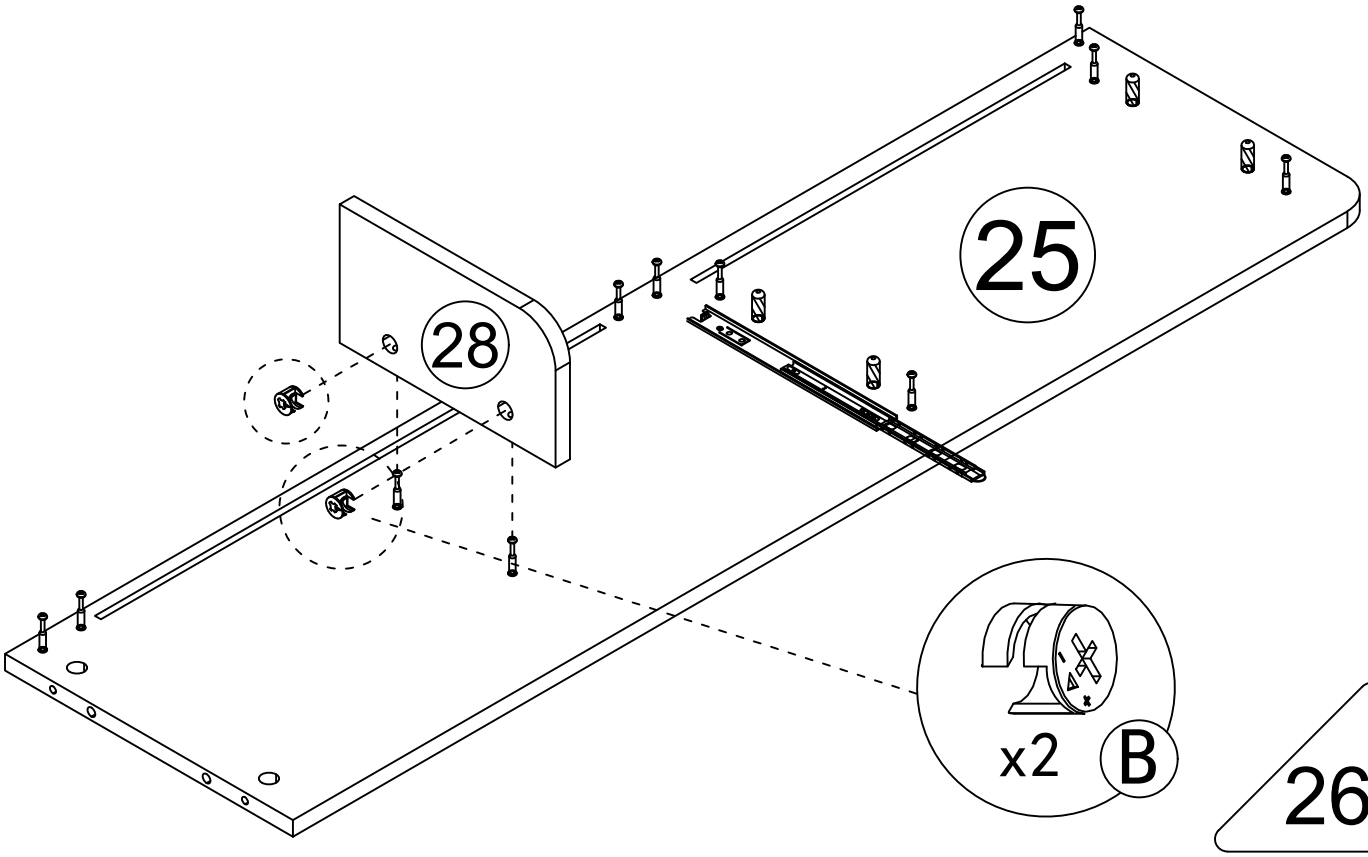

Step 36

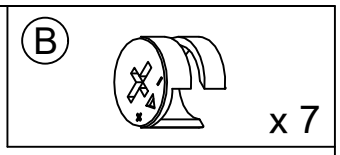

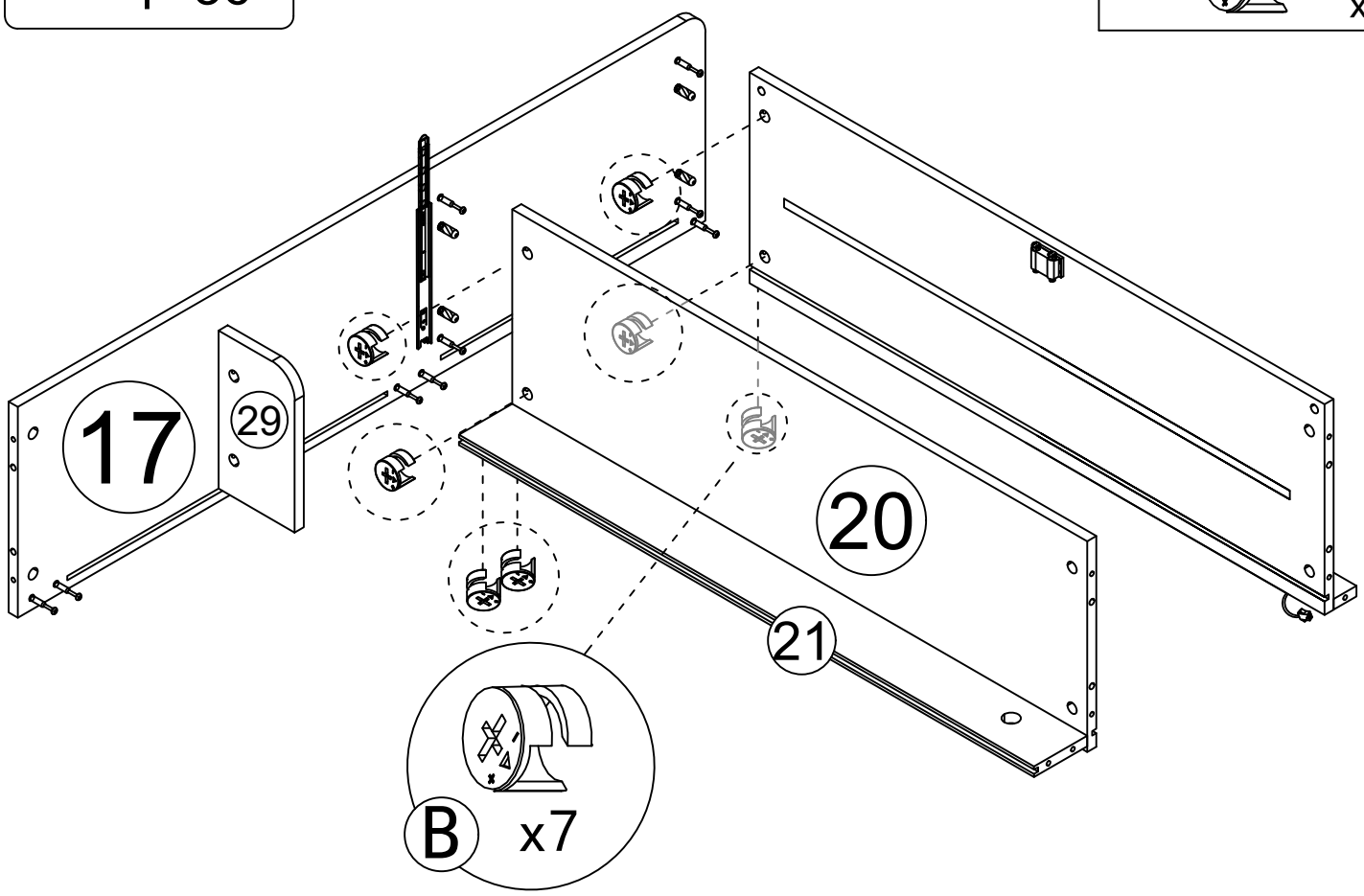

Step 37

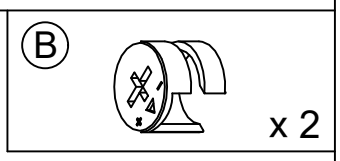

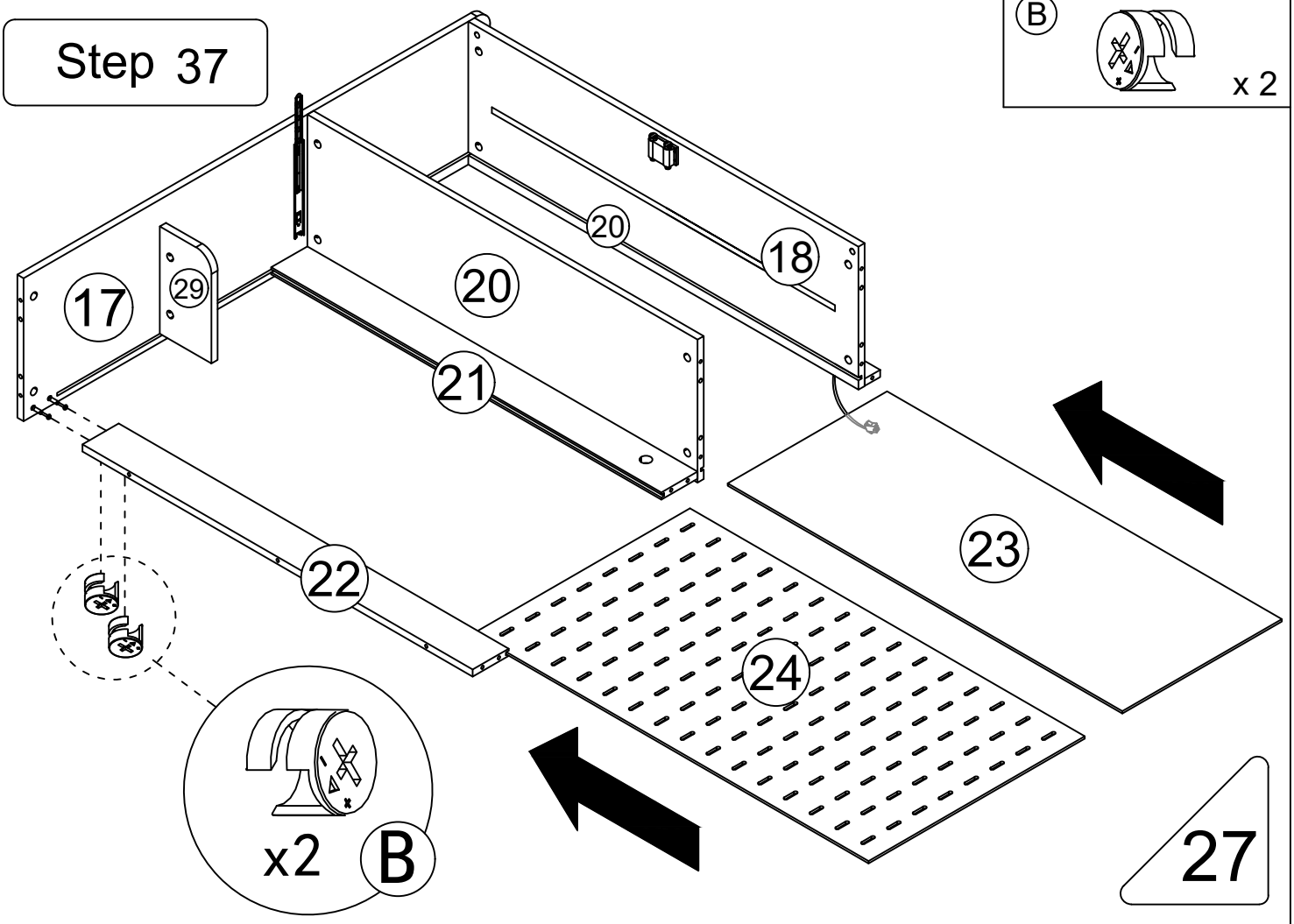

Step 38

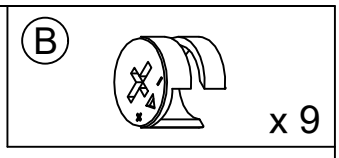

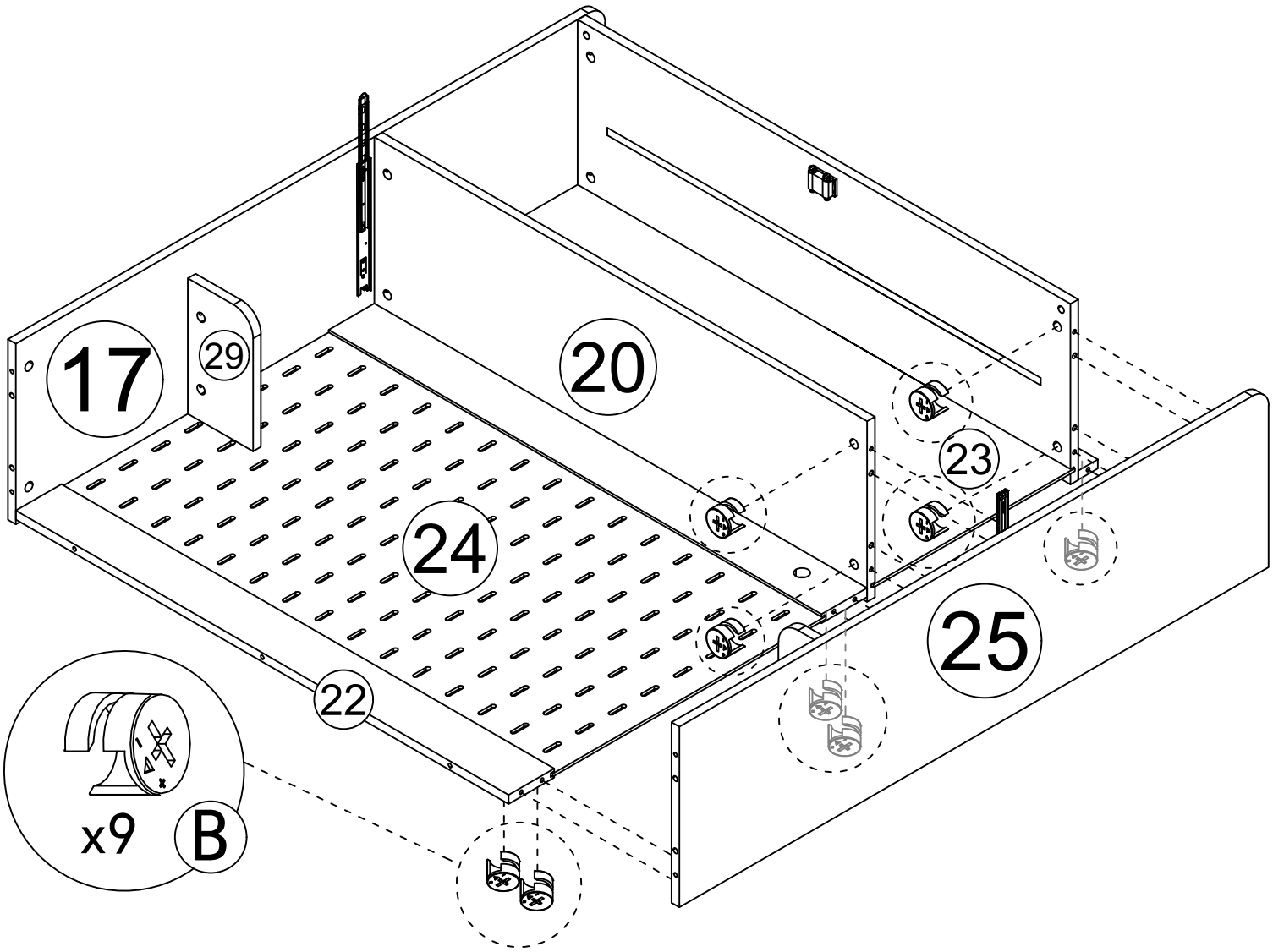

Step 39

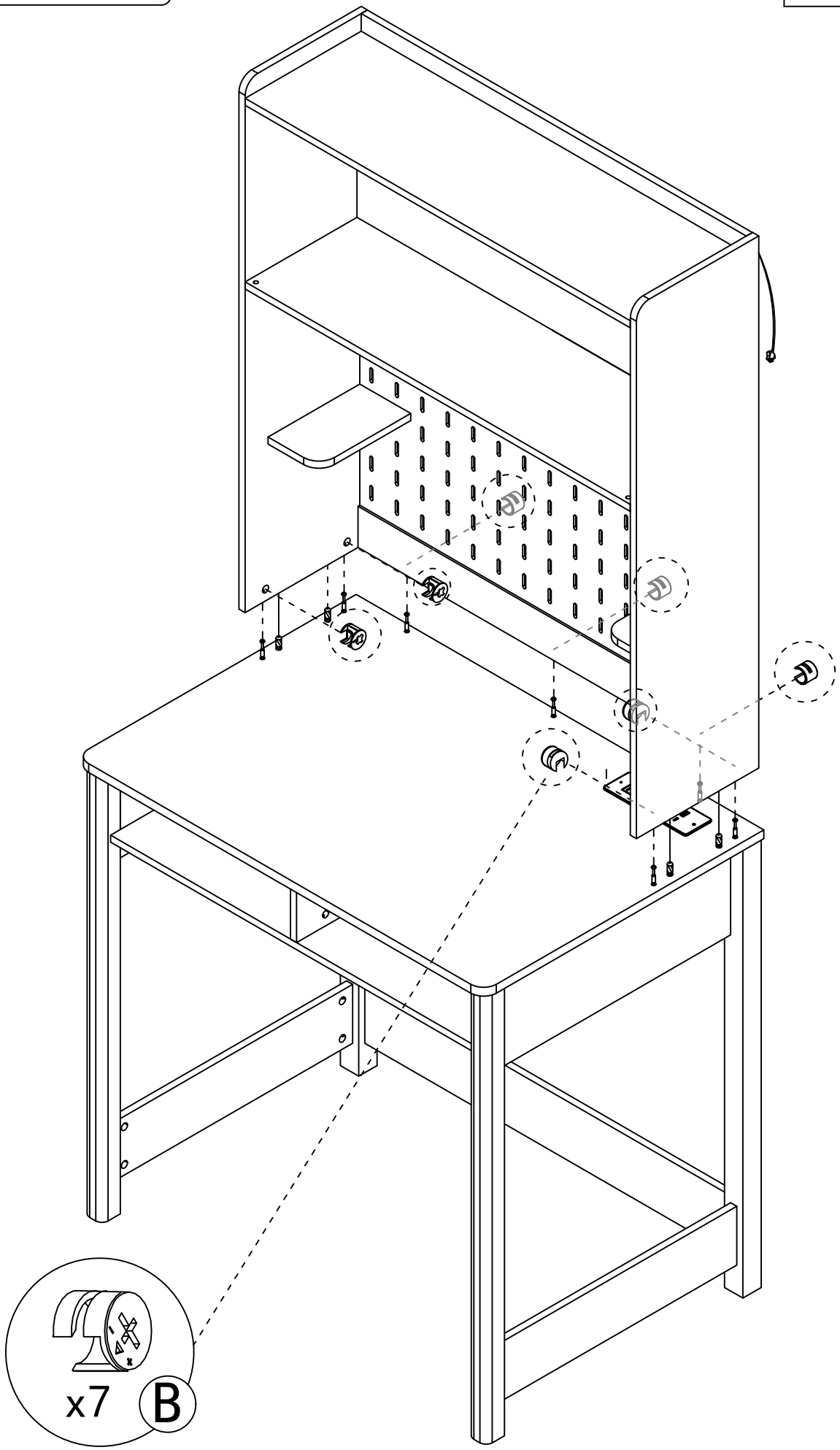

Step 40

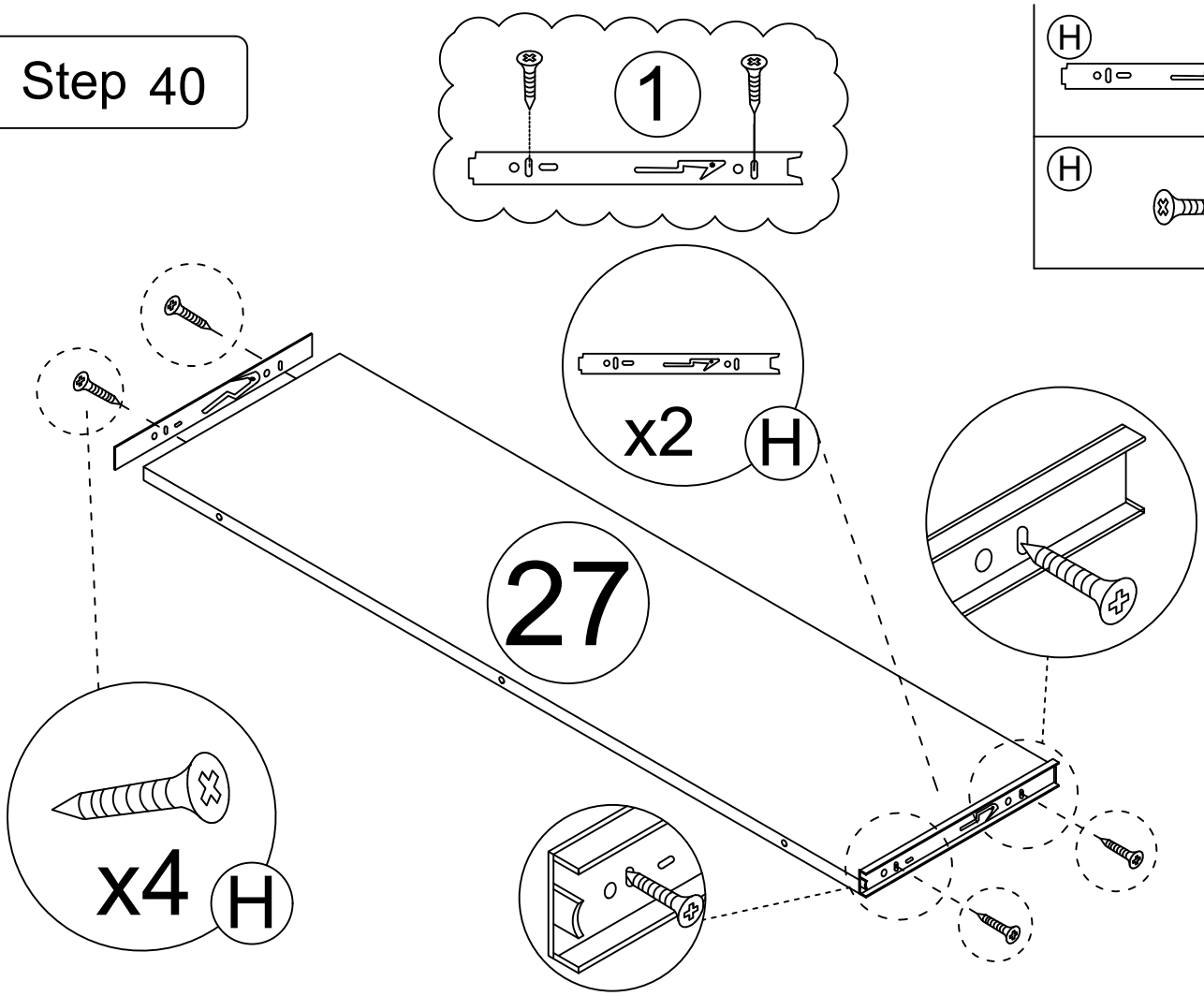

Step 41

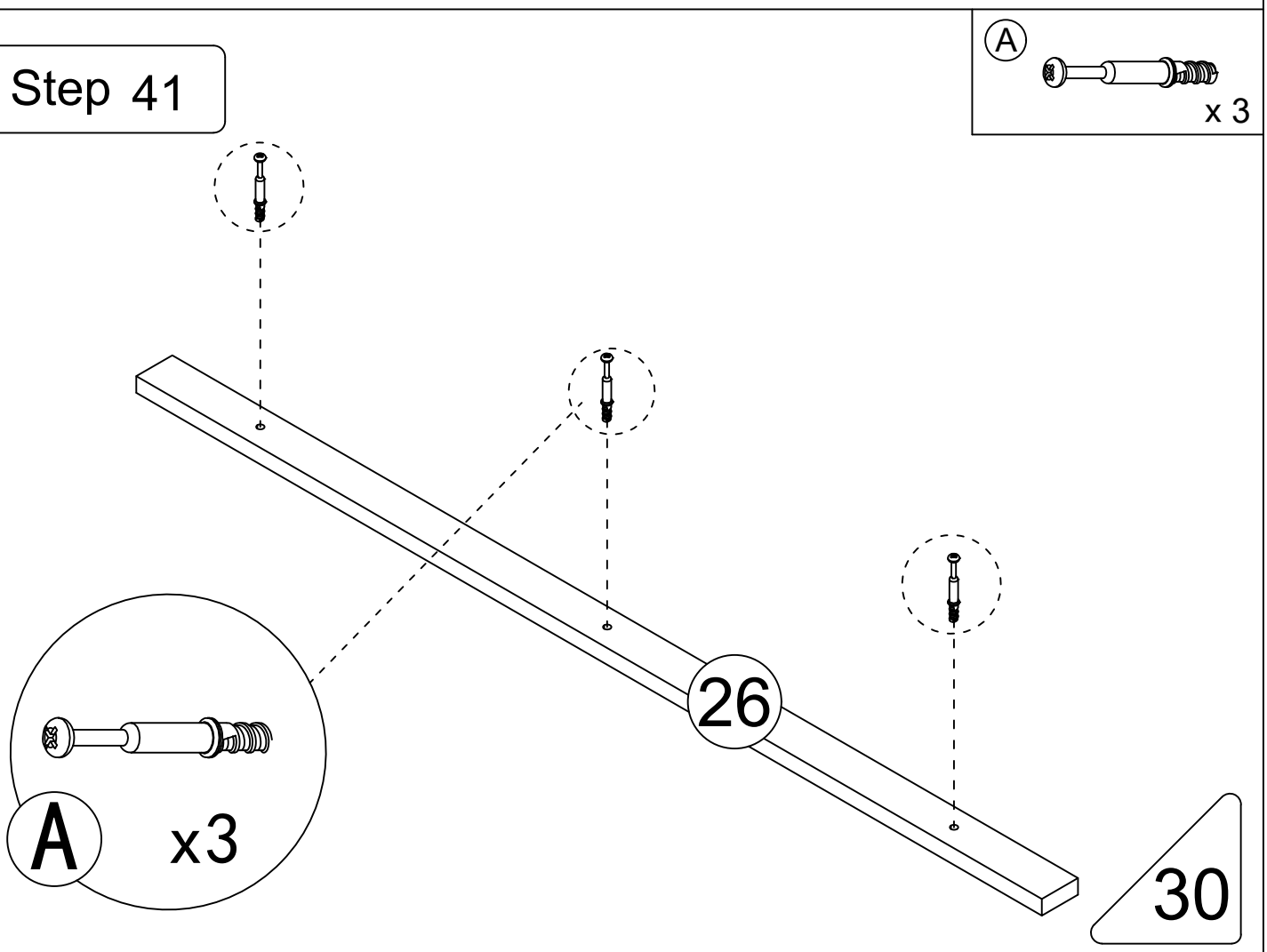

Step 42

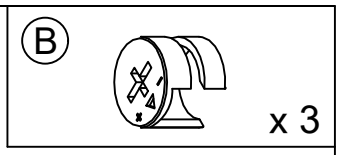

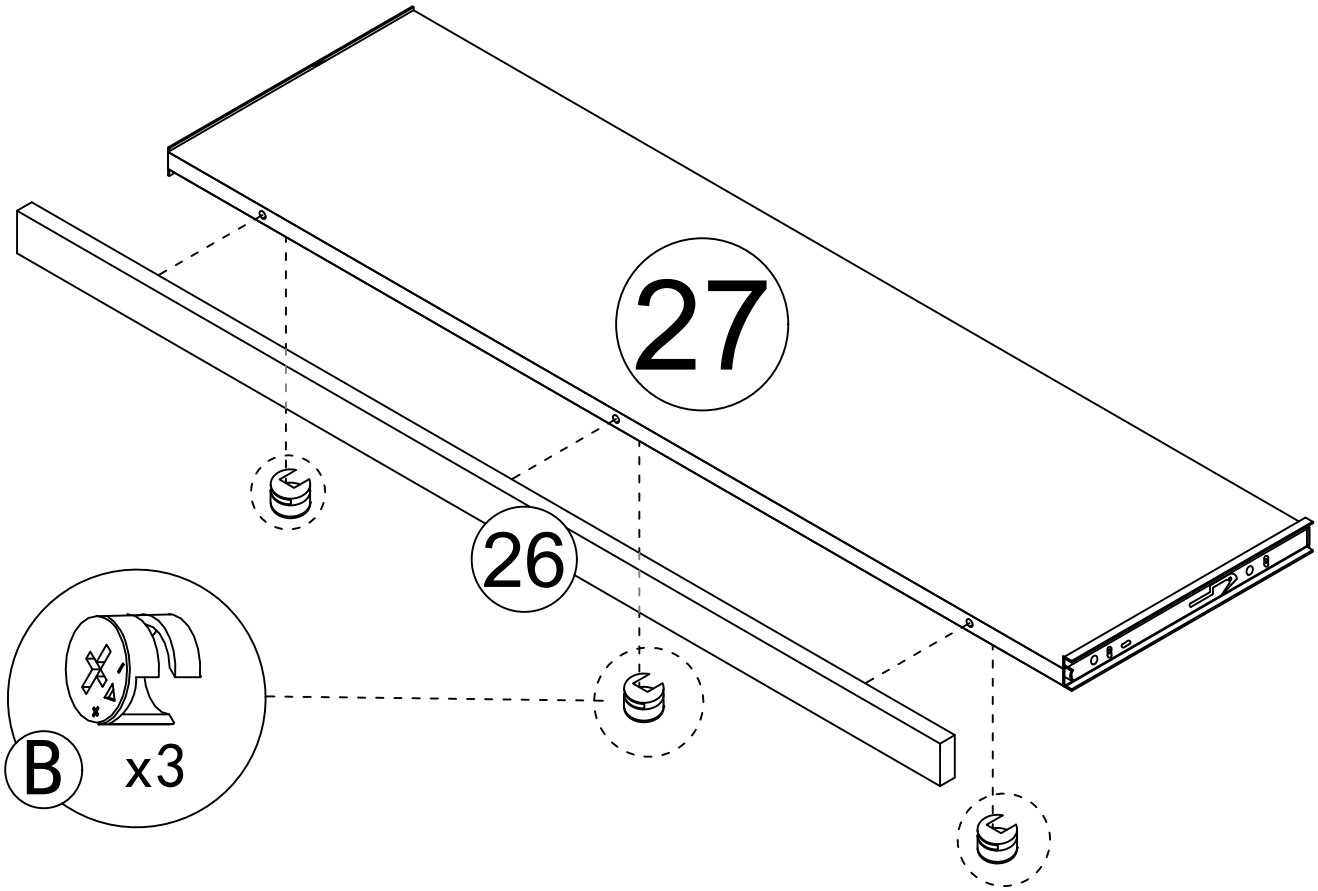

Step 43

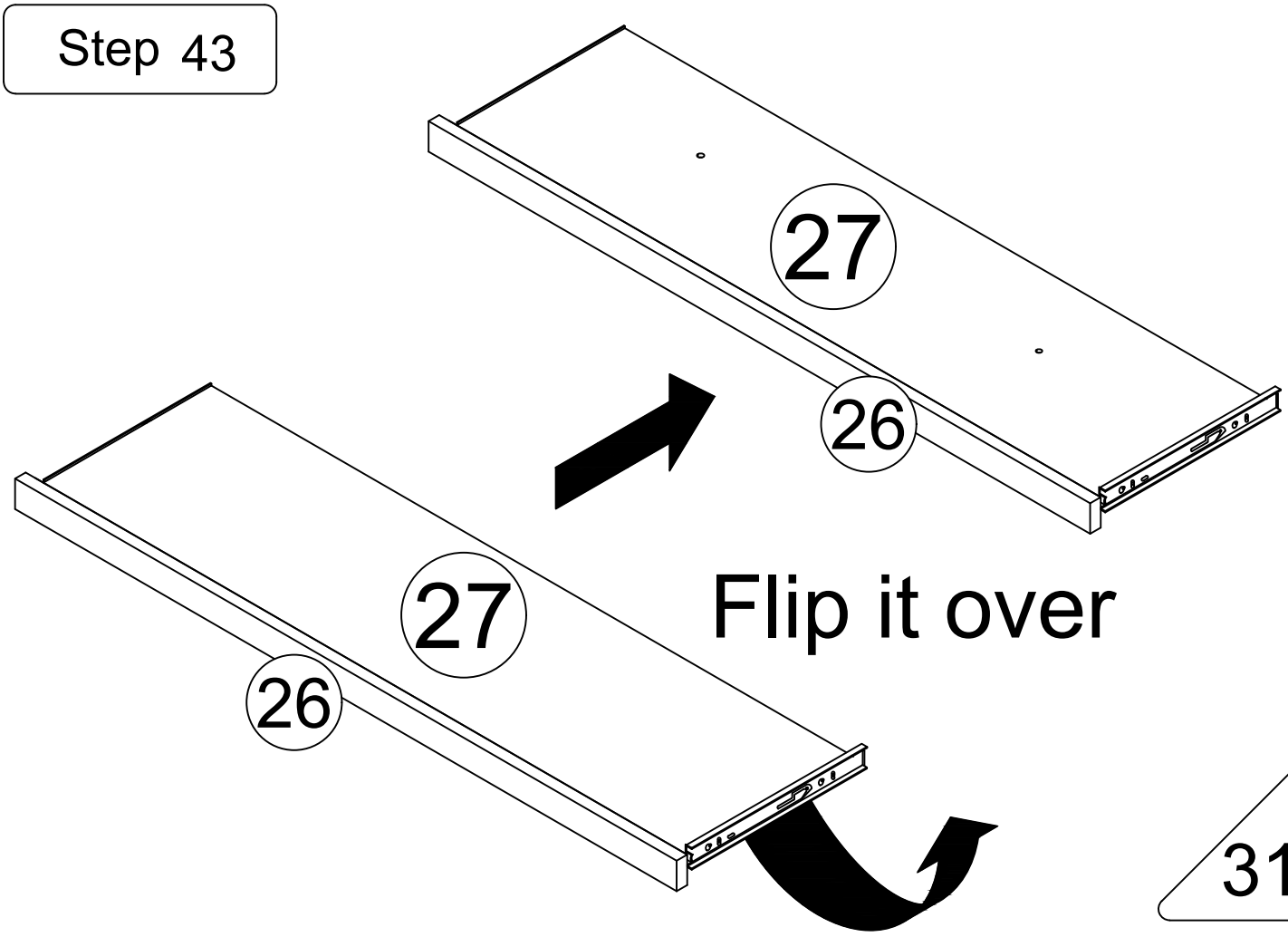

Step 44

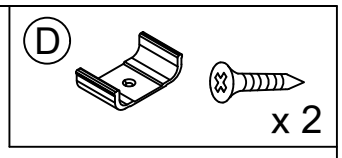

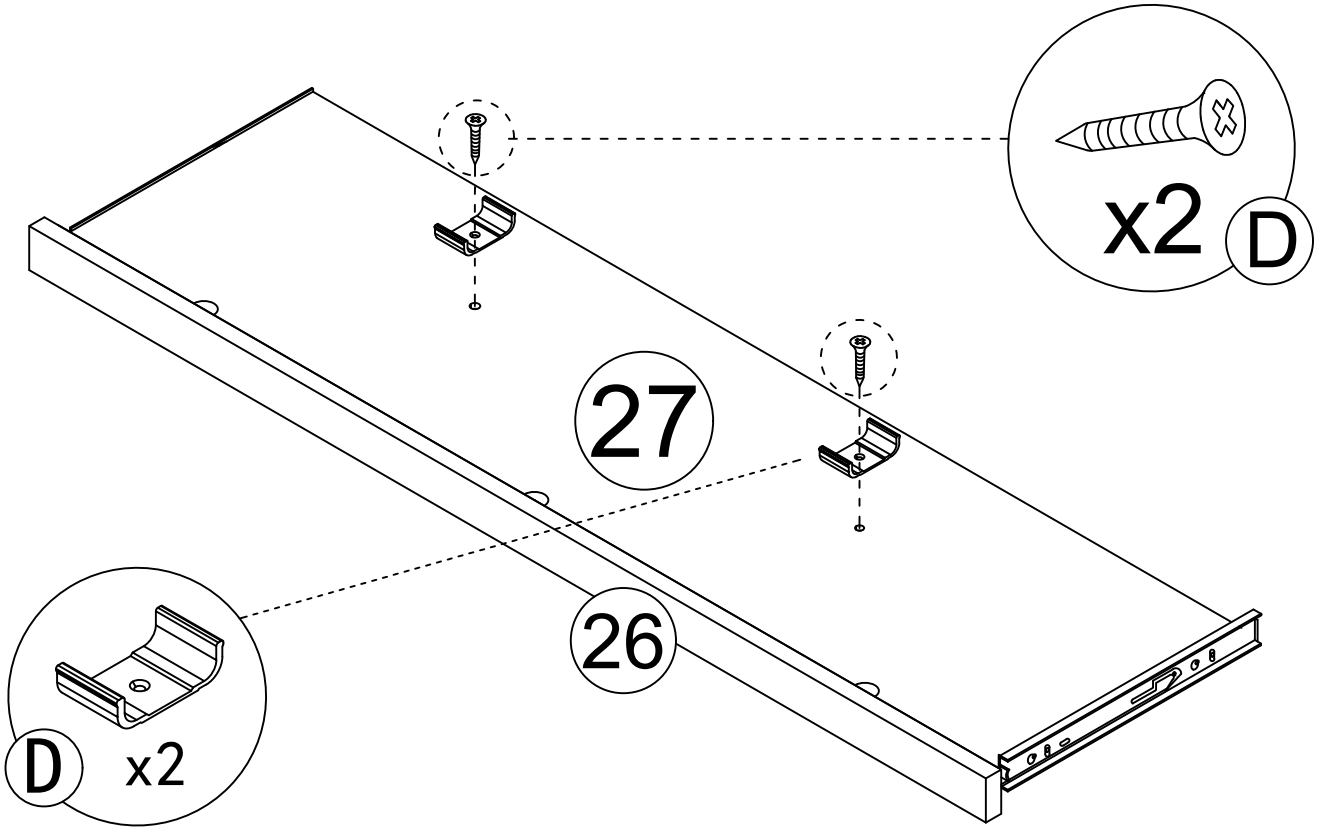

Step 45

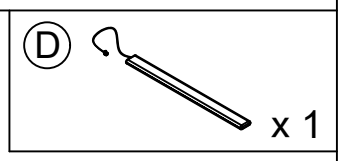

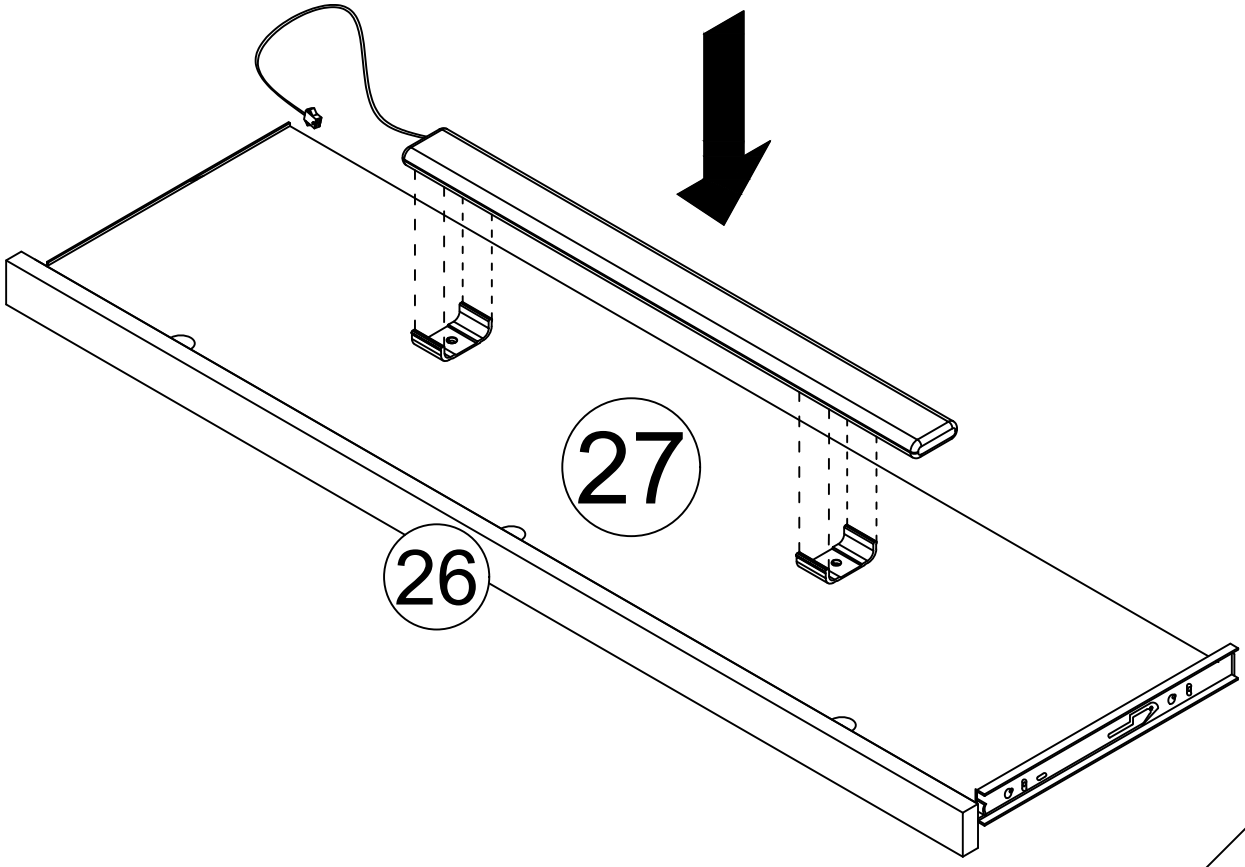

Step 46

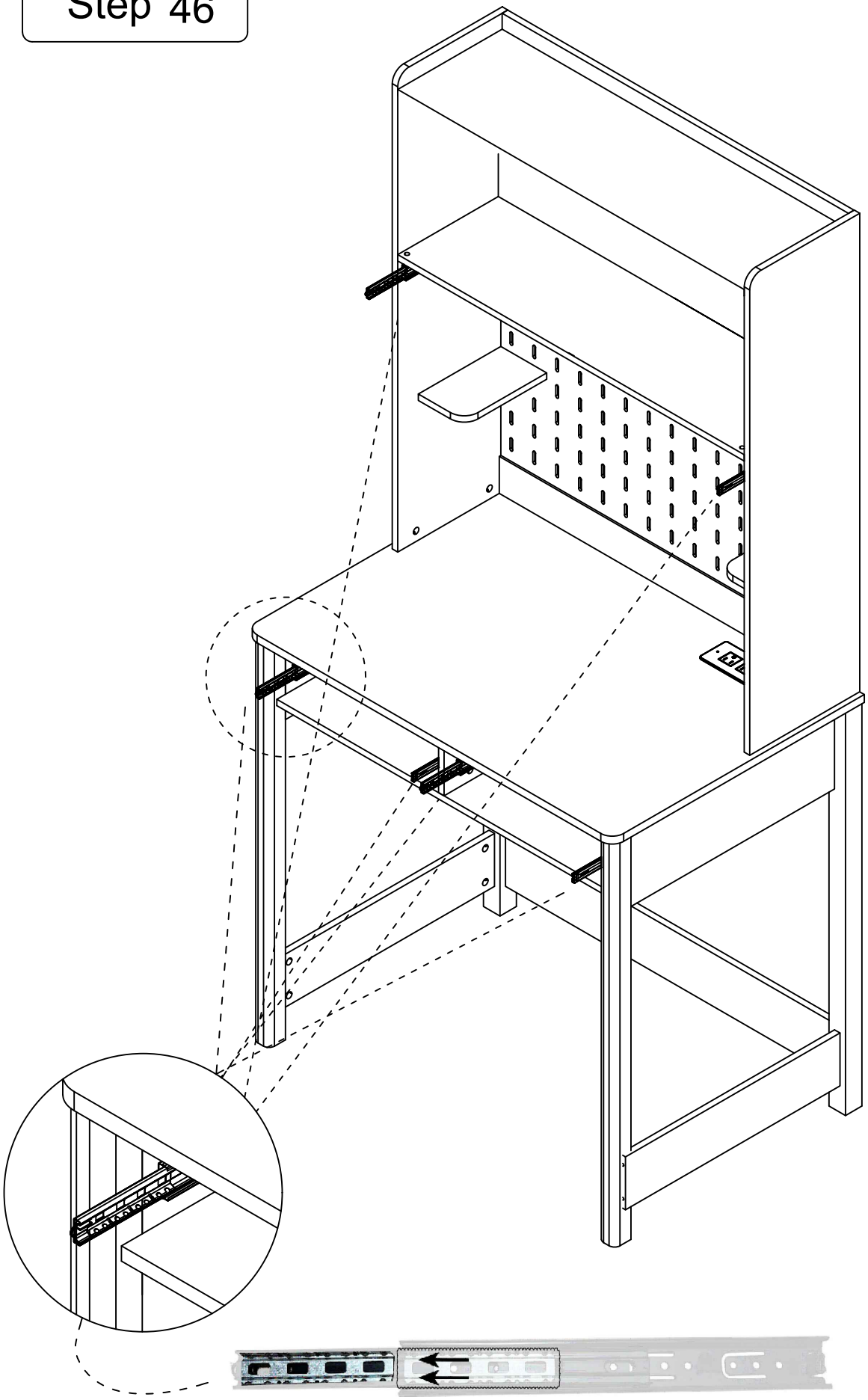

As shown，When installing the drawer,
pull the guide rail out first, Slide beads are also pulled out.

Step 47

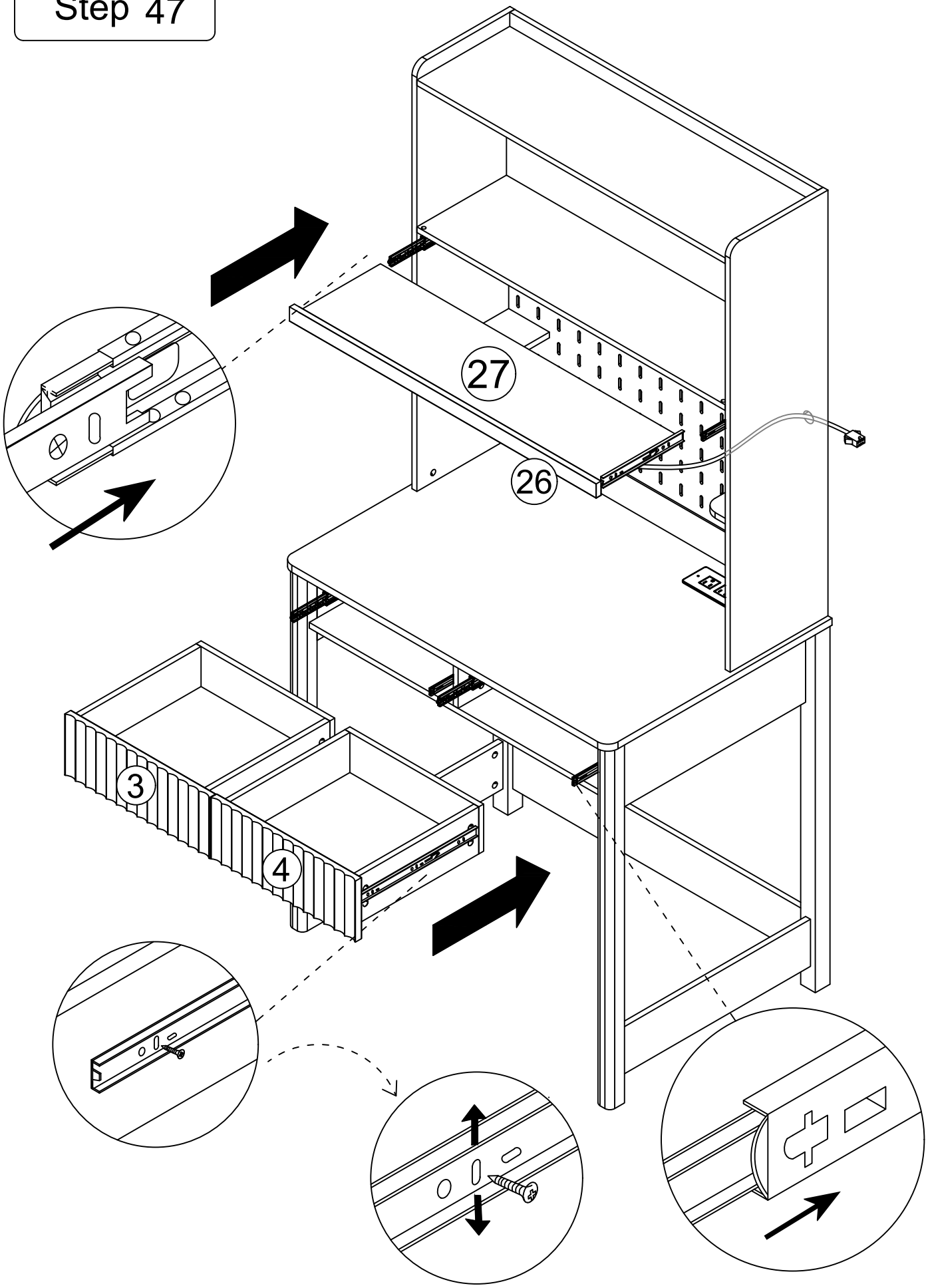

If a large gap is found after installing the drawer the slide railcan be moved up and down to adjust the gap.

Step 48

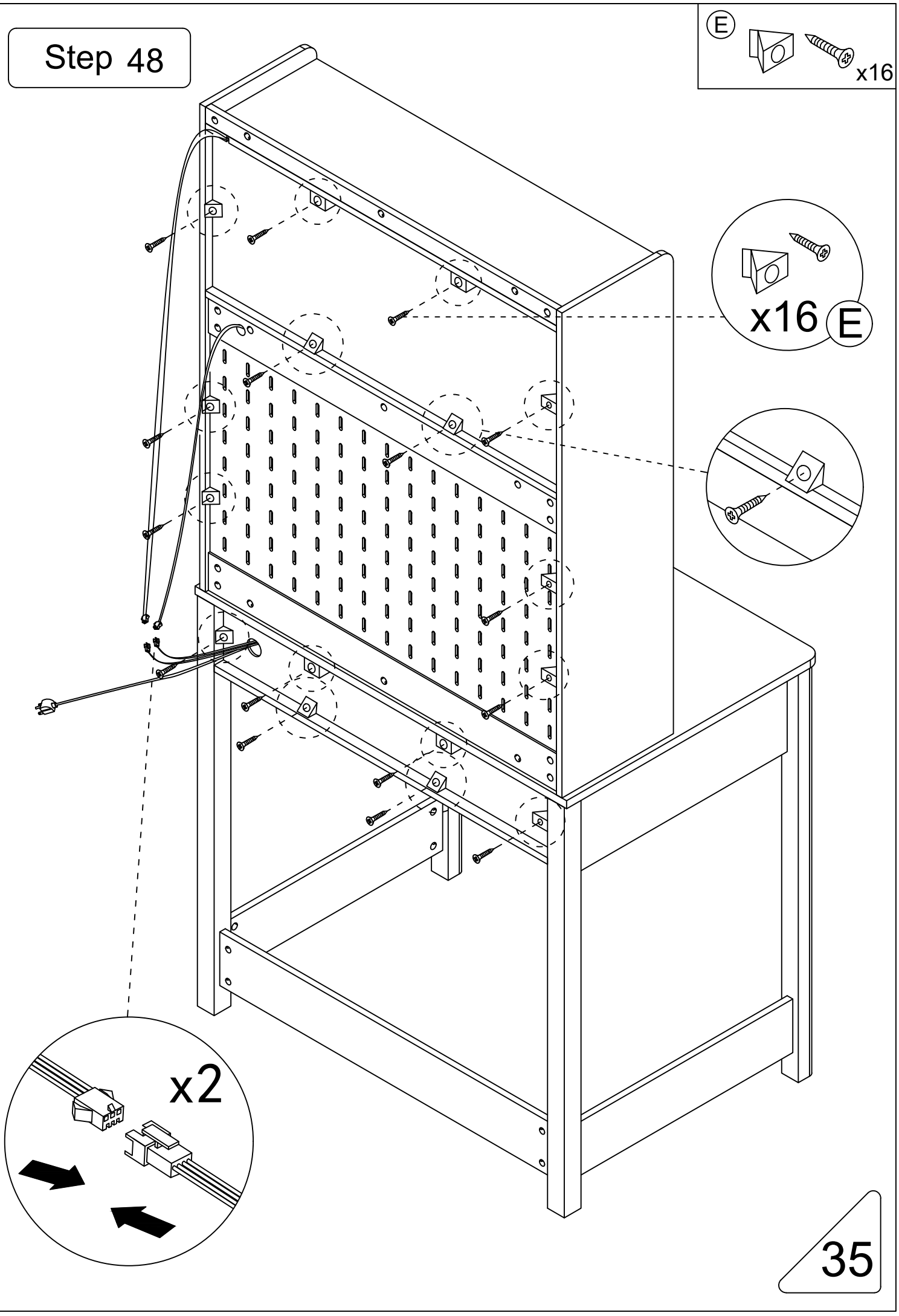

Step 49

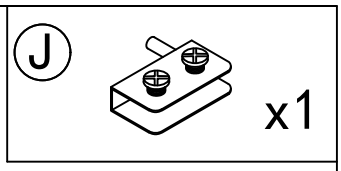

The white pad remains unchanged inside the part.

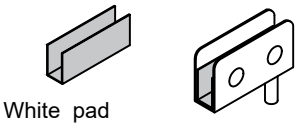

First, completely unscrew the screws on the parts

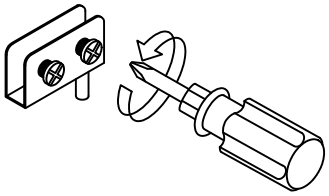

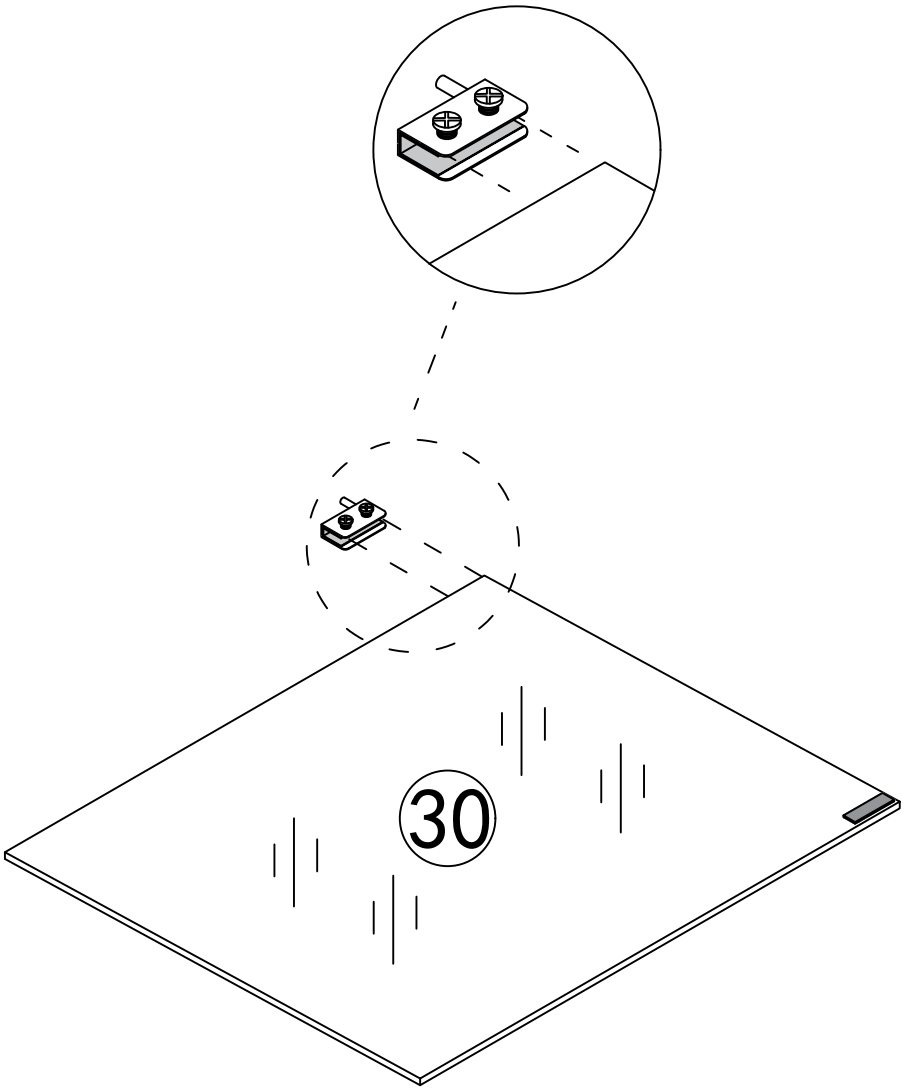

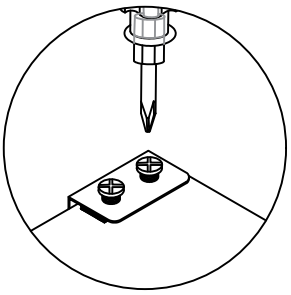

Locking screw

Pay attention to the direction of the door hinge, rotate the screws to compress the white pad and do not place it in the opposite direction

Step 50

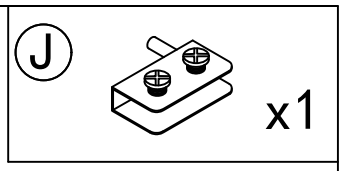

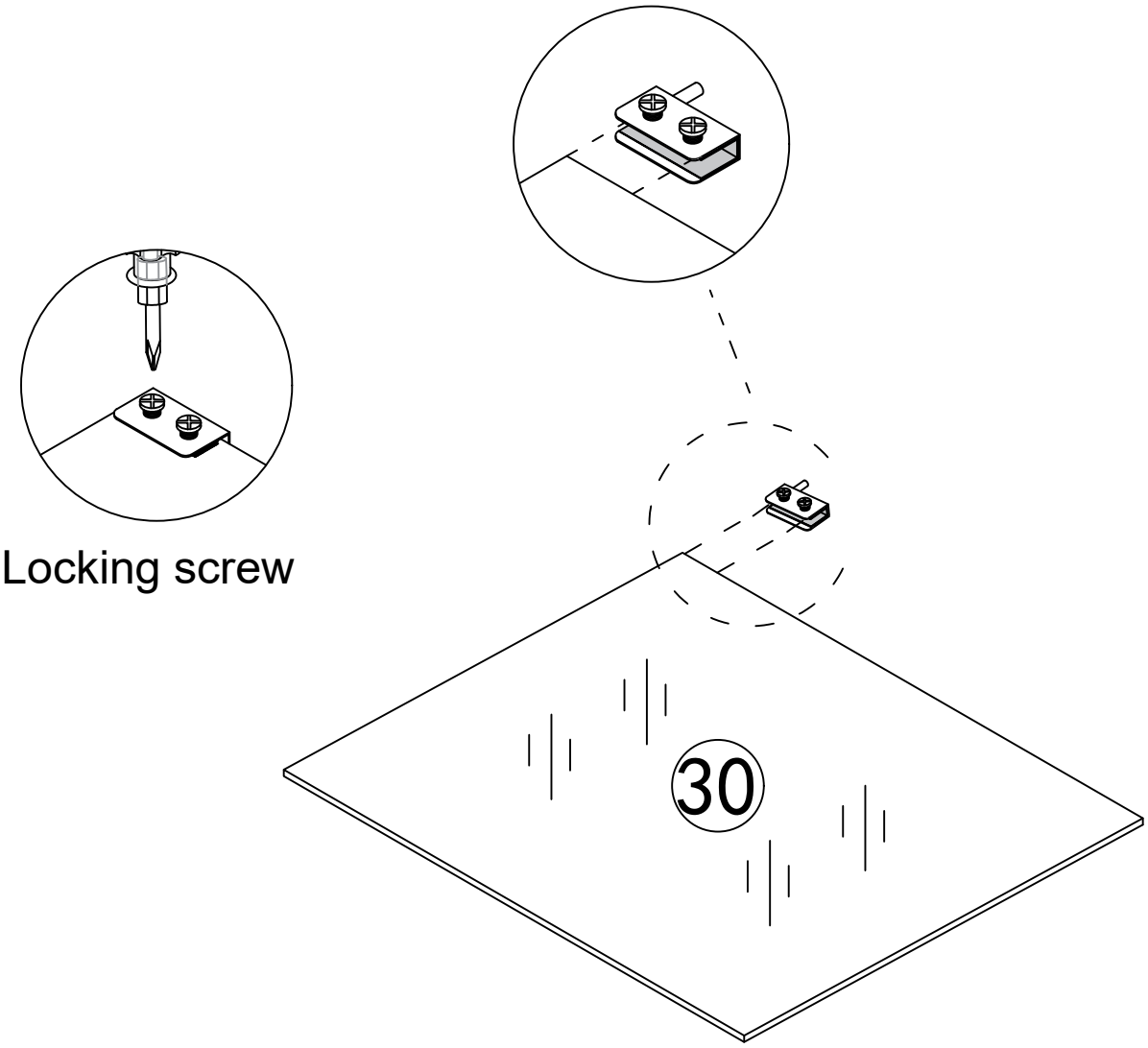

Pay attention to the direction of the door hinge, rotate the screws to compress the white pad and do not place it in the opposite direction

Step 51

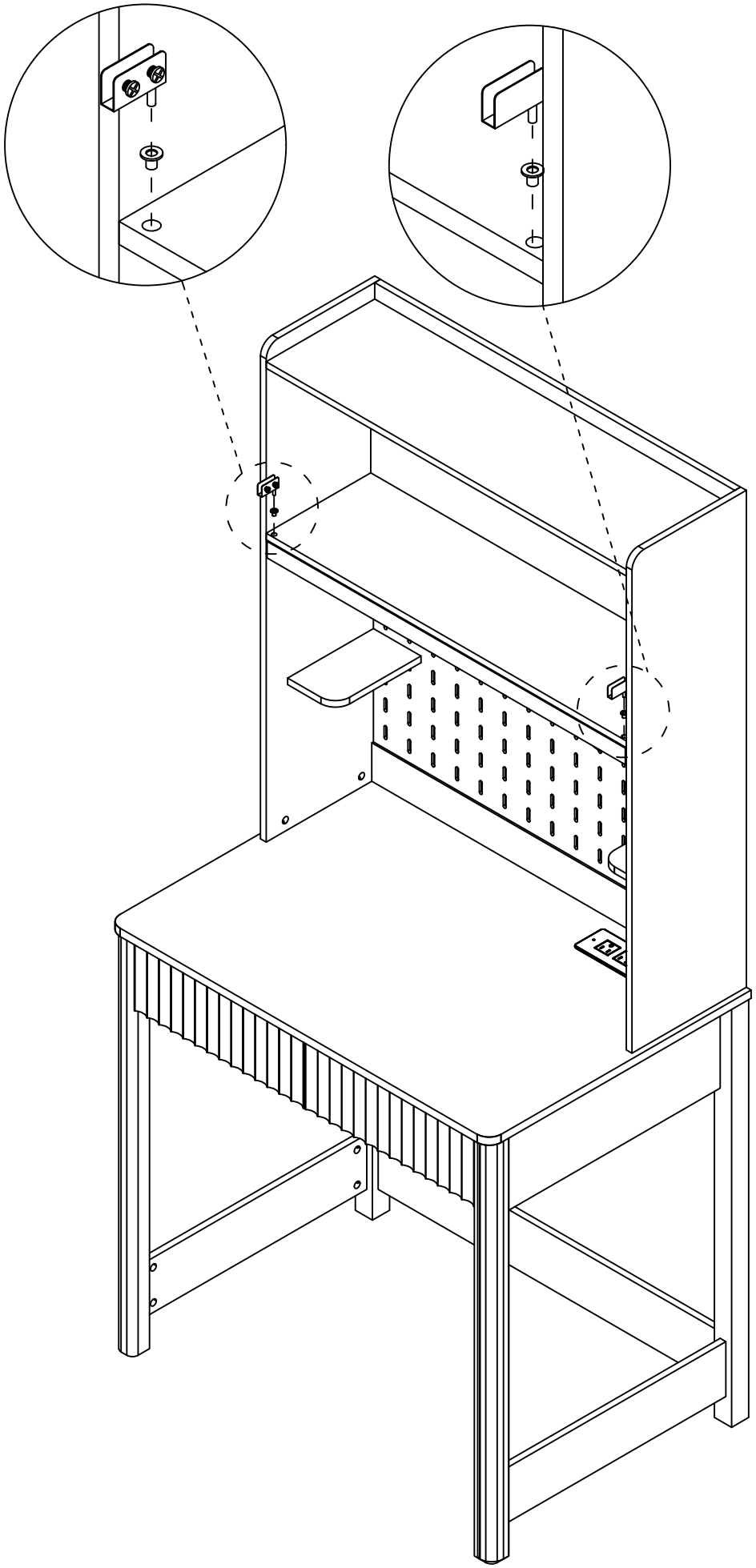

J	x 1
J	x 1
J	x 2

Step 52

J

x 2

Pay attention to the direction of
the door hinge during installation

When installing a glass door, it is recommended to have two people install it to avoid the glass door colliding or hitting oneself.

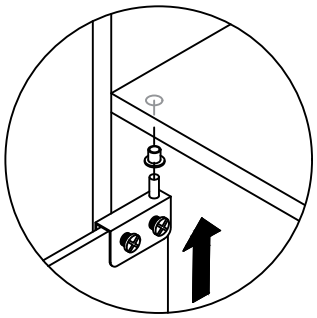

first

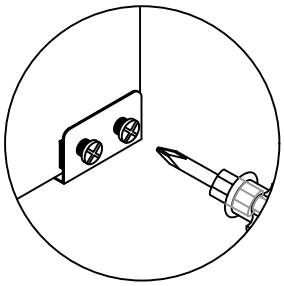

third

Locking screw

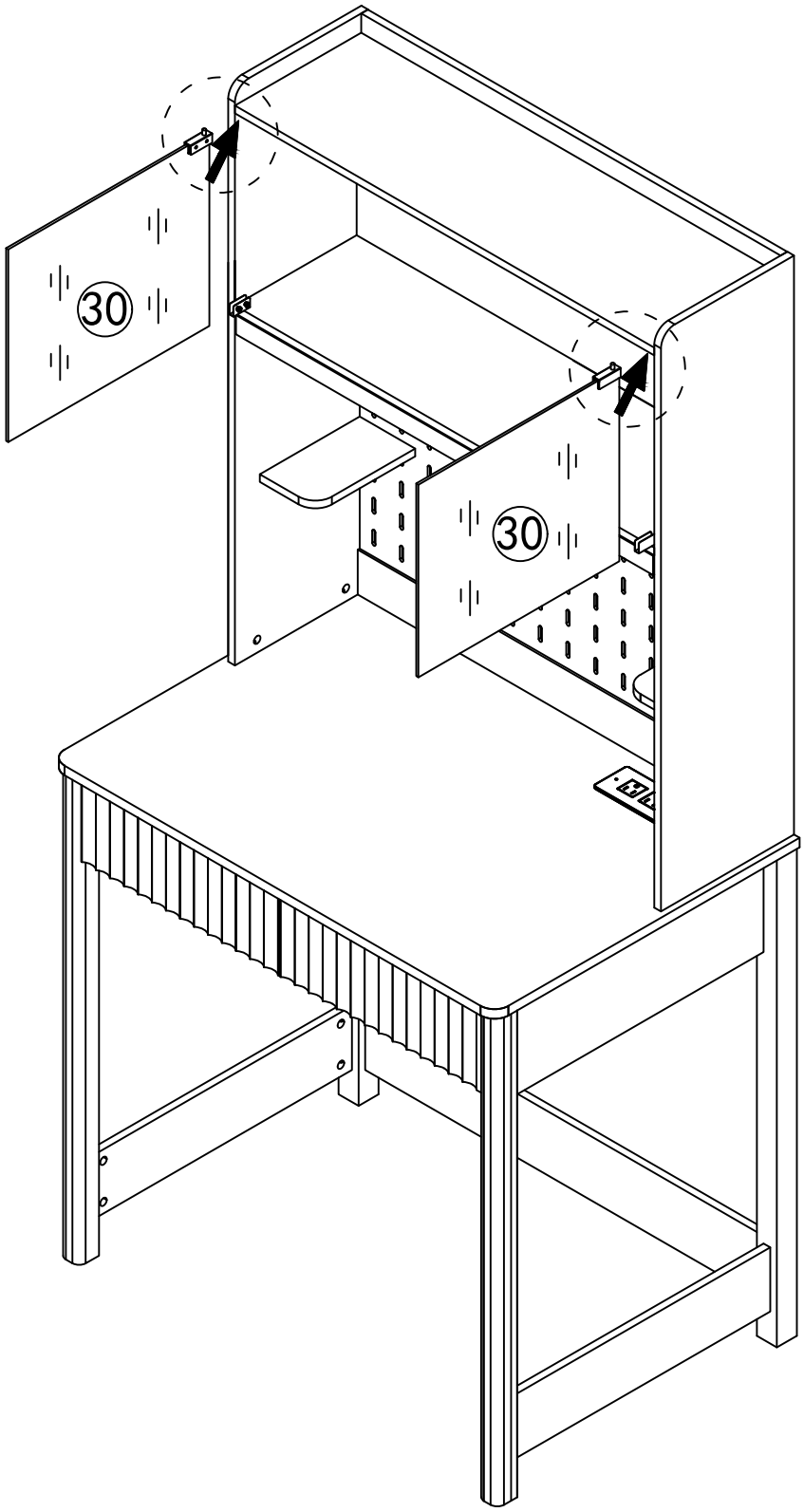

Step 53

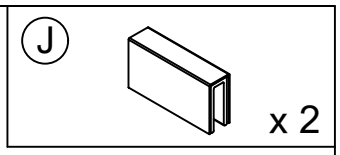

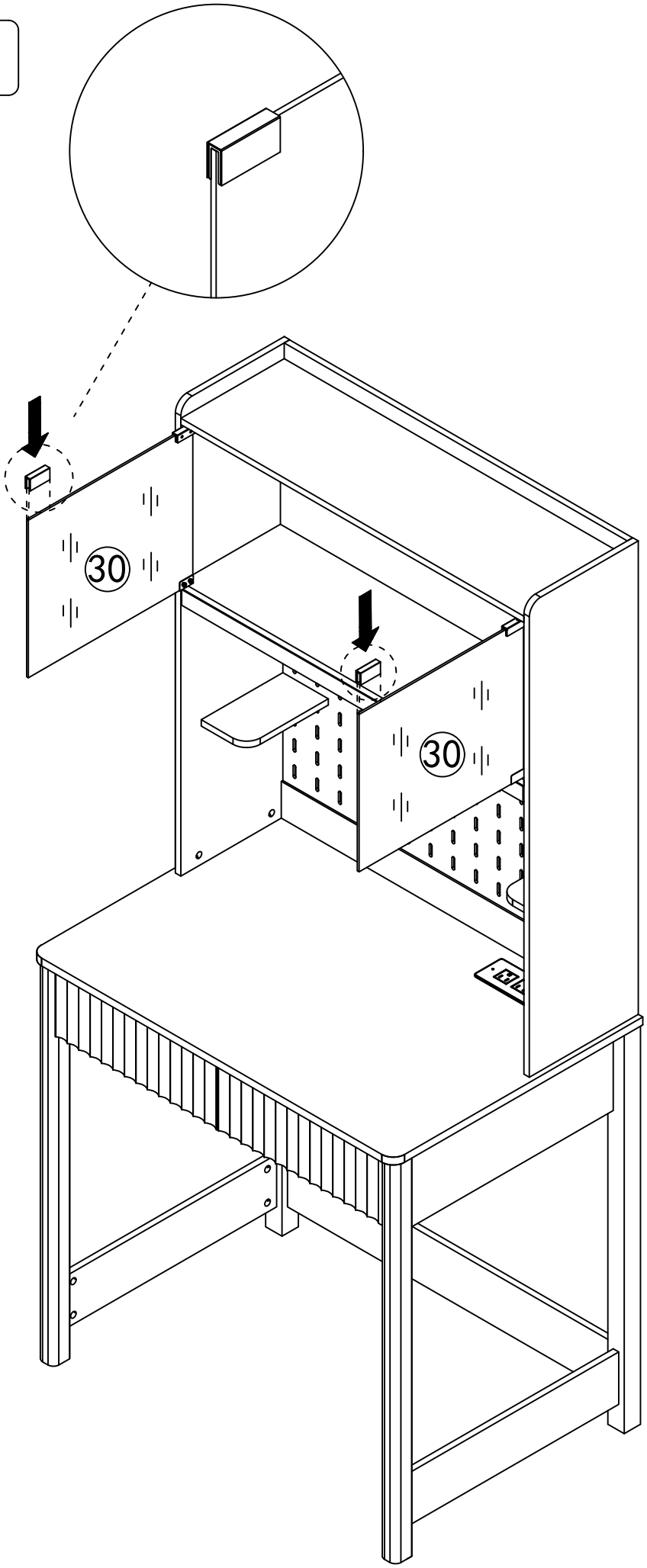

Step 54

wall

Install as required

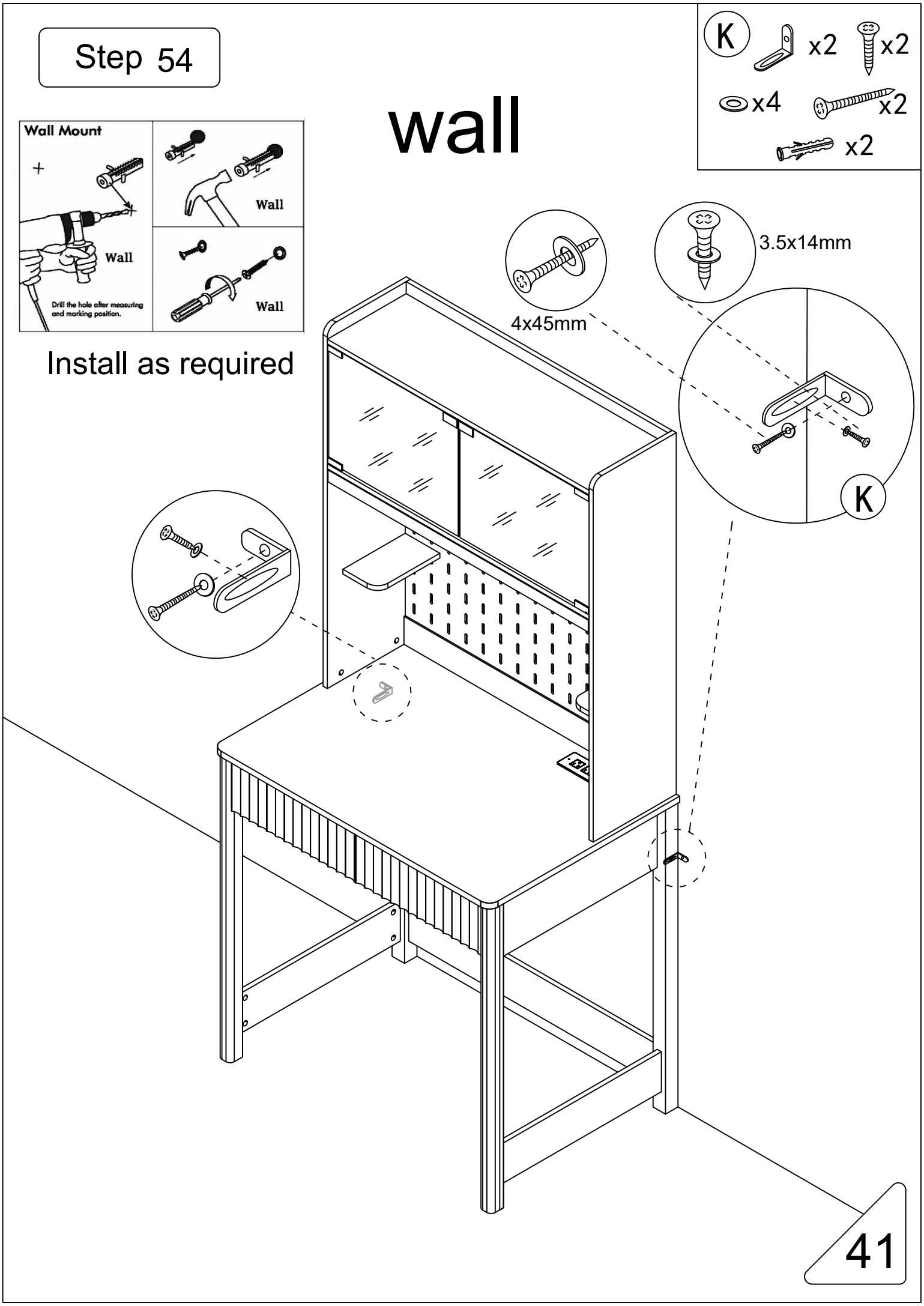

Step 55

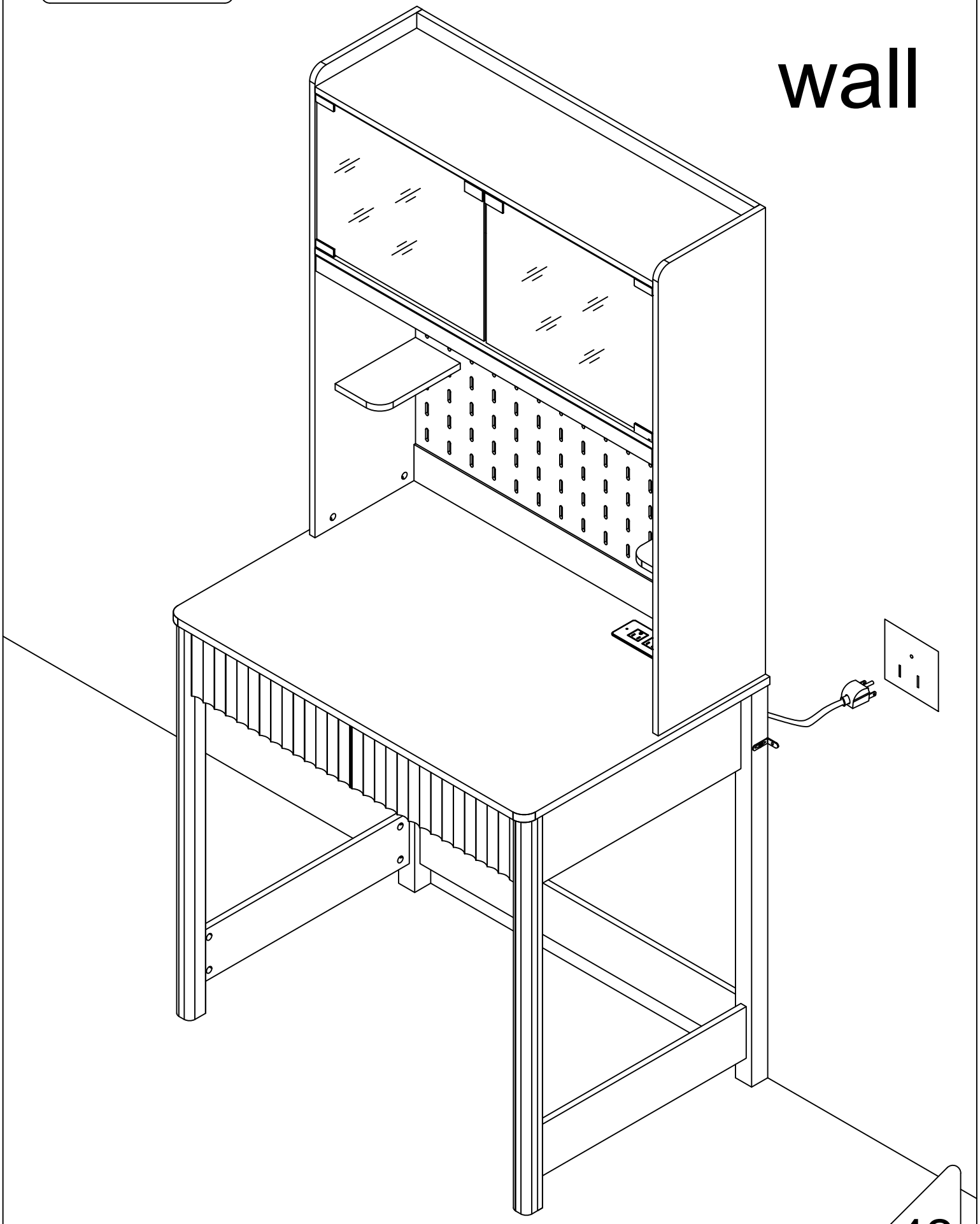

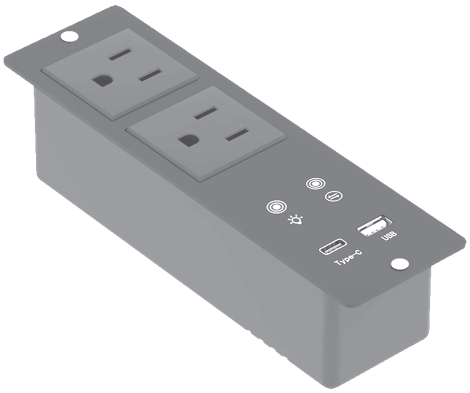

User's Guide

A27

Thank you for purchasing this product.

To use this product, please connect it to a power source.

Please use if the product works normally after connecting to power.

Introduction

The box is an intelligent controller. It has 1 USB output port 1 Type-c port and can distribute the current output up to 5V DC-2A. With 2 touch buttons, it can turn. ON/OFF the light, change light colors, and adjust the light luminance.

Operation

This touch button controls the on/off of the light

Short touch -> lighting on -> short touch -> lighting off.

This touch button controls the color switching and brightness adjustment of the light

1. It can only be used when the light is on
2. Offering 3 different colors to choose from.Simply tap to cycle through the options.
3. Long touch -> adjust the luminance.

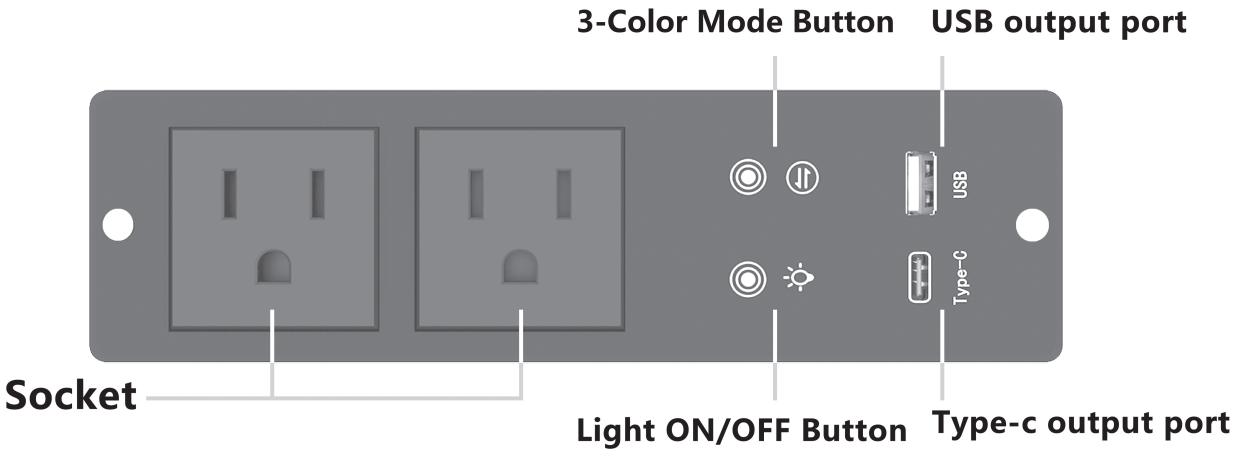

⚠ ATTENTION PLEASE

1. If there is no touch response suddenly, Re-plug the power to reset the touch static electricity.

2. If you have any questions when installing, please feel free to contact us. Thank you.