ASSEMBLY INSTRUCTIONS

WARNING !

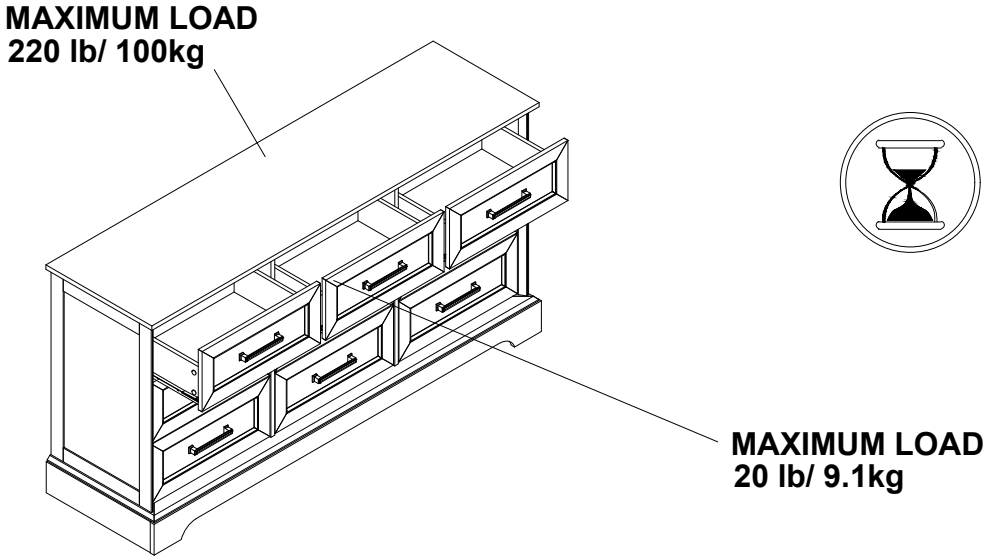

Estimated Time for Assembly

60 mins

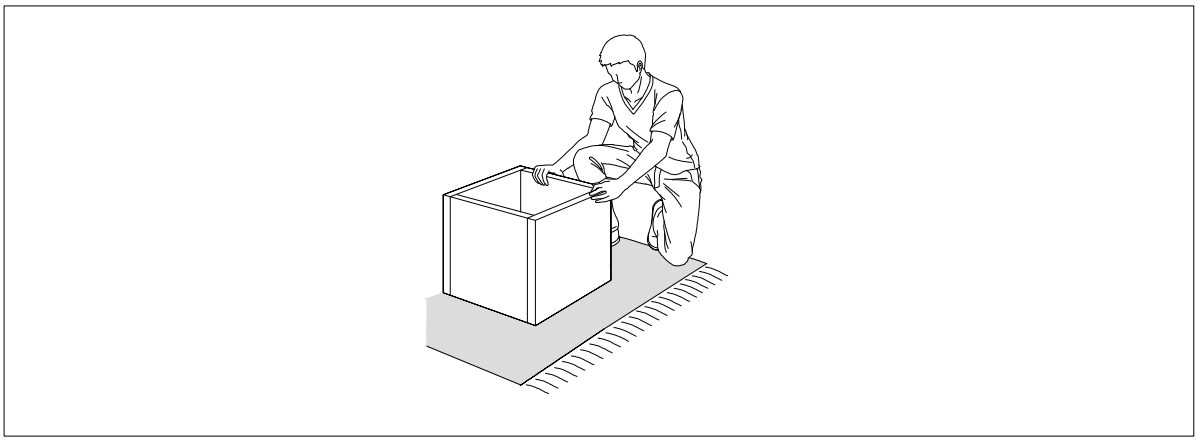

Assembly the furniture on empty carton, carpet, or rug to prevent scratches or damage.

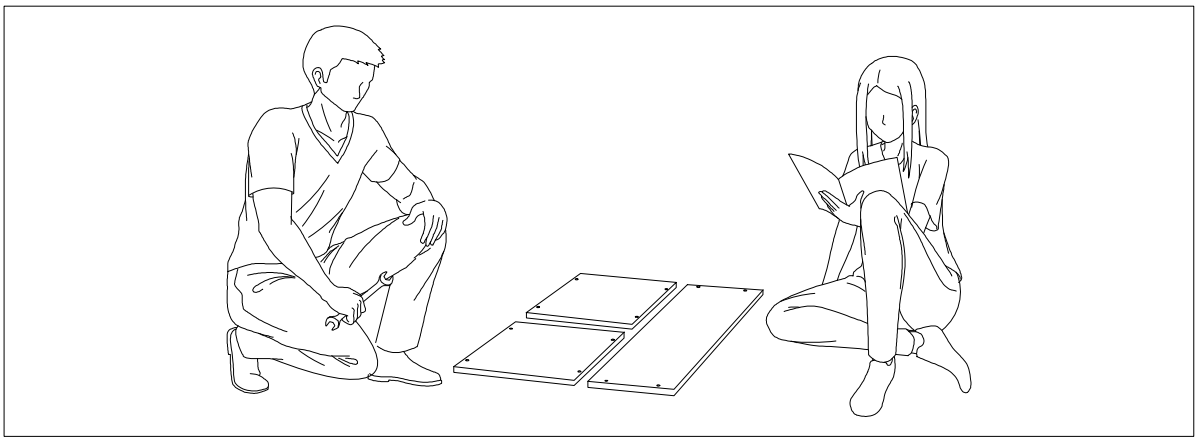

This furniture requires 2 people to assembly.

Make sure no parts are missing or damaged before assembly.

Board Identification

Not actual size

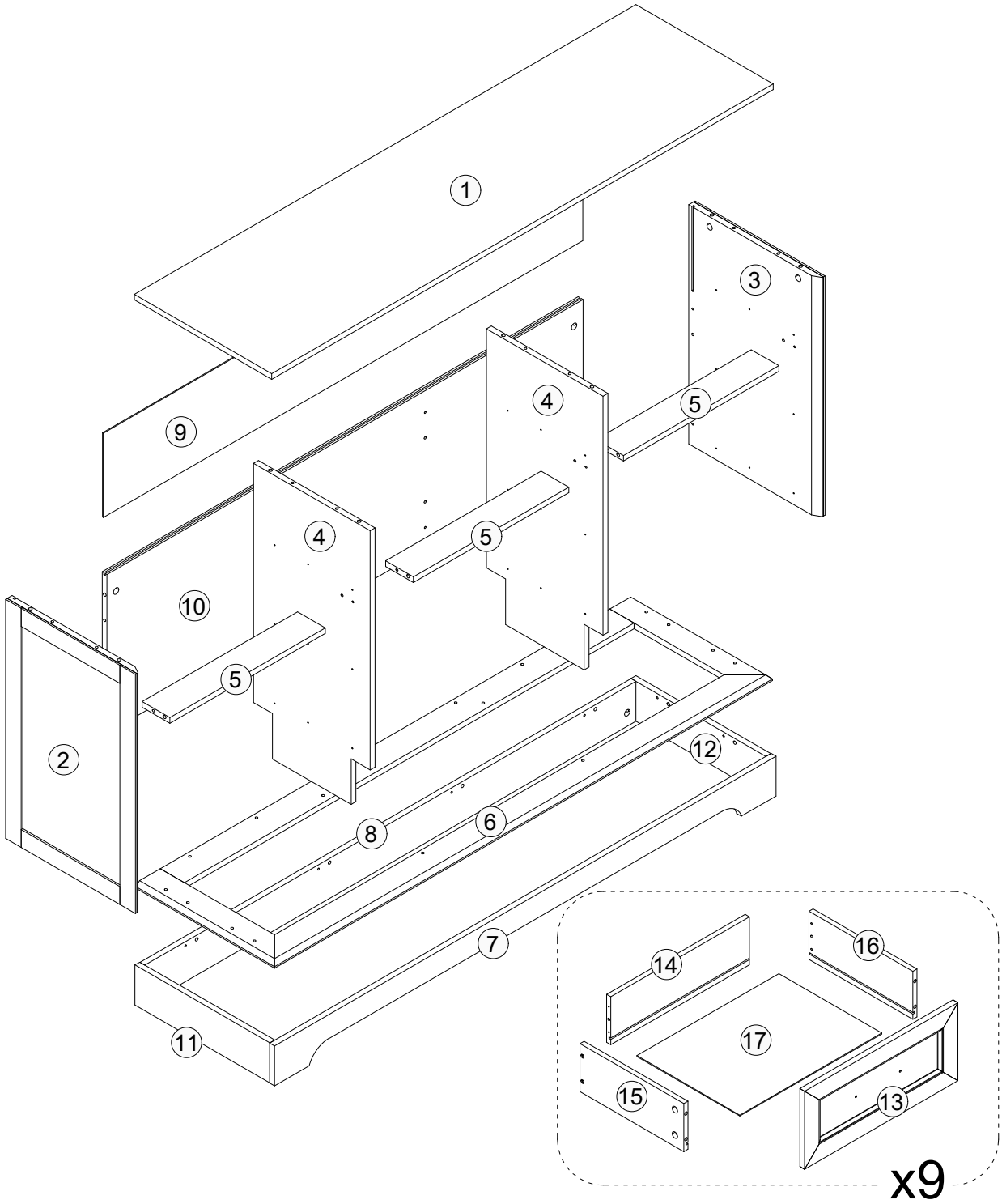

BOARD IDENTIFICATION

Not actual size

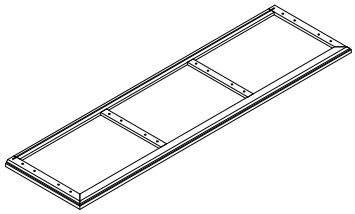

1 x1

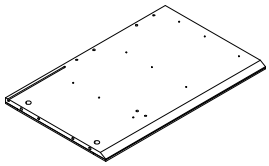

2 x1

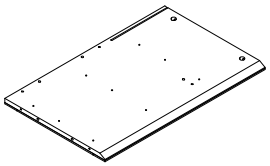

3 x1

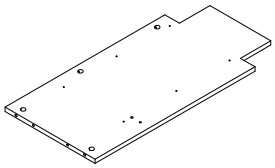

4 x2

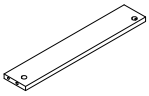

5 x3

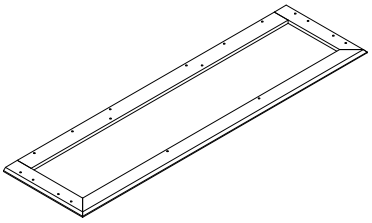

6 x1

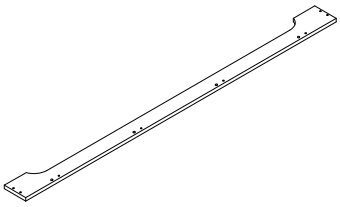

7 x1

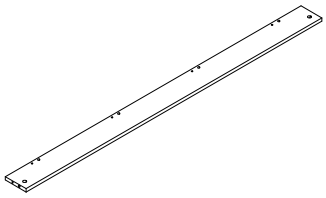

8 x1

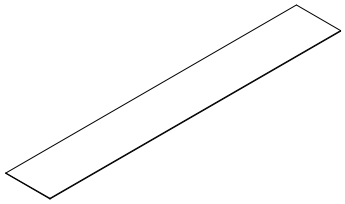

9 x1

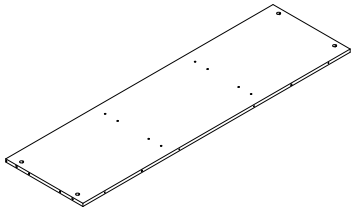

10 x1

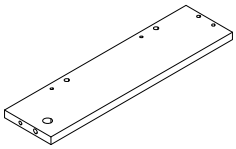

11 x1

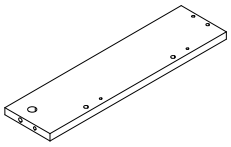

12 x1

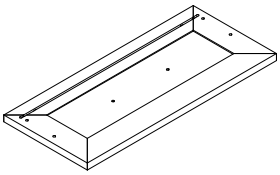

13 x9

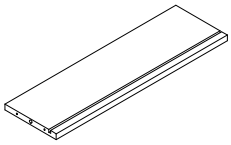

14 x9

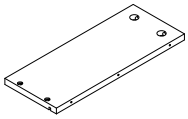

15 x9

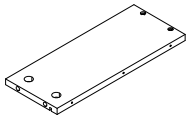

16 x9

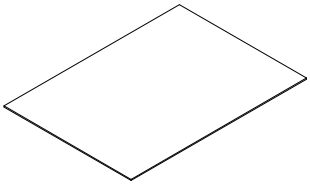

17 x9

HARDWARE LIST

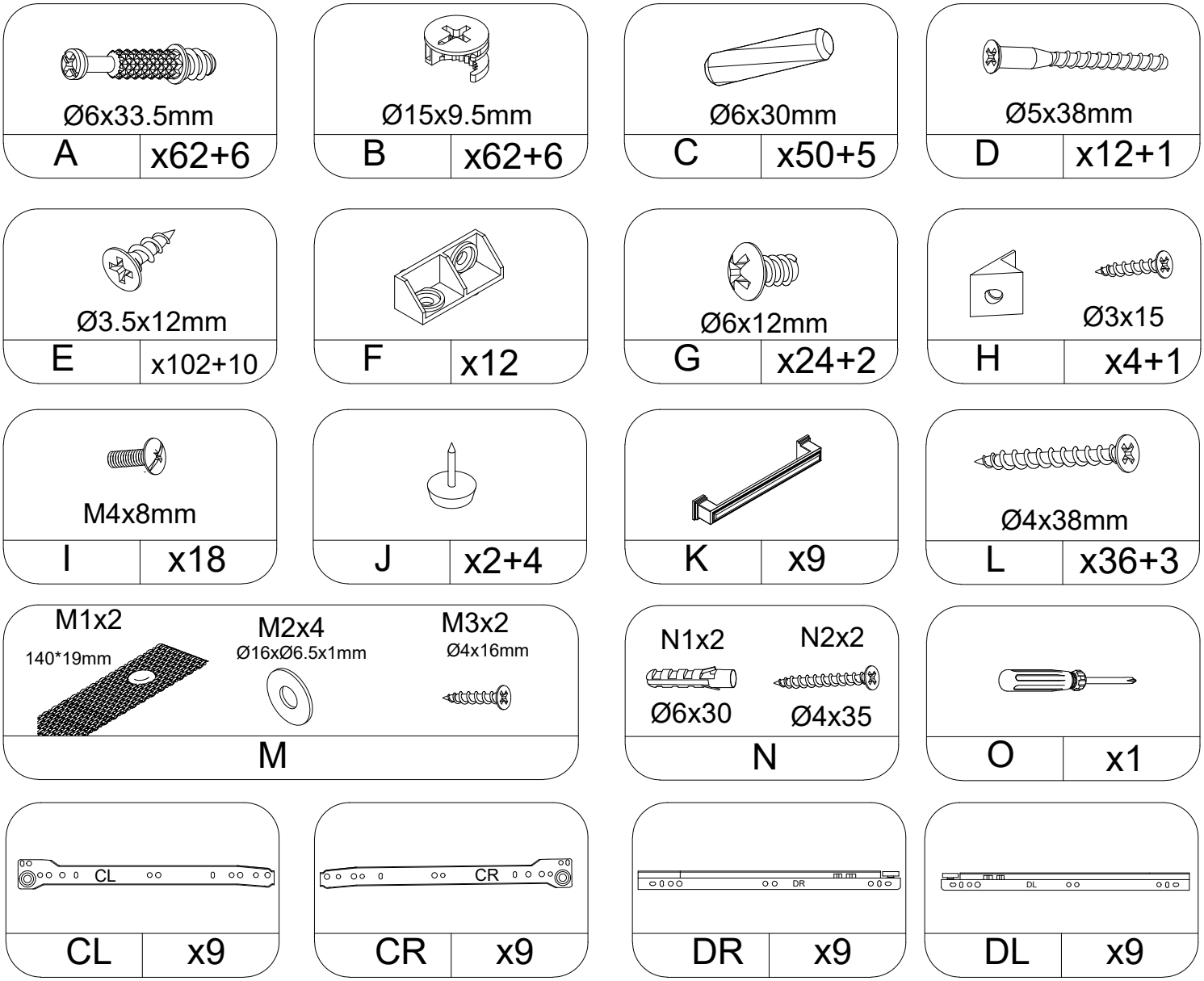

Cam Lock Fastening System

Insert the cam bolt into the hole first, then insert the cam lock and lock it.

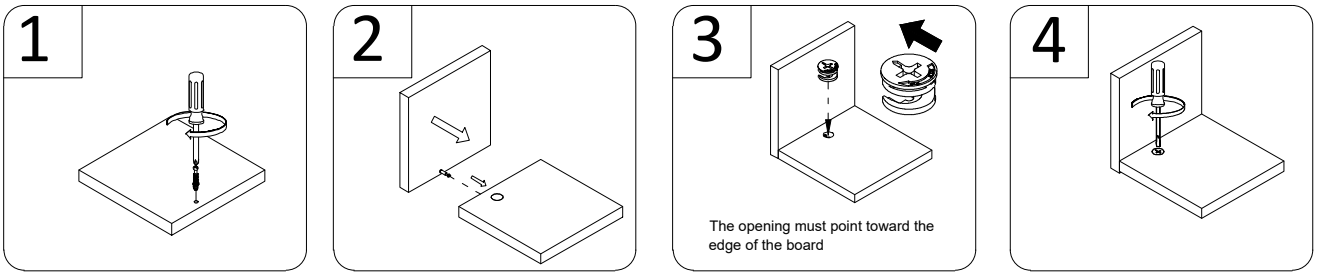

STEP 1

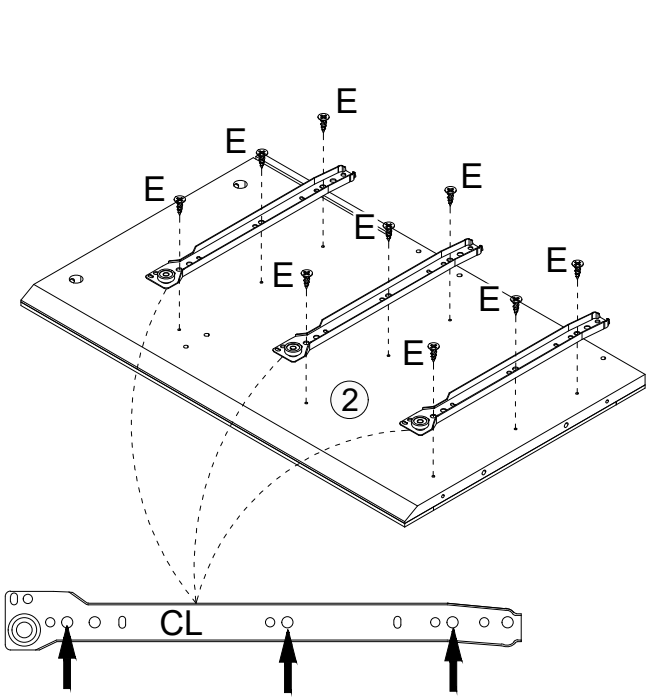
E
E
E
E
E
E
E
E
E
2
CL

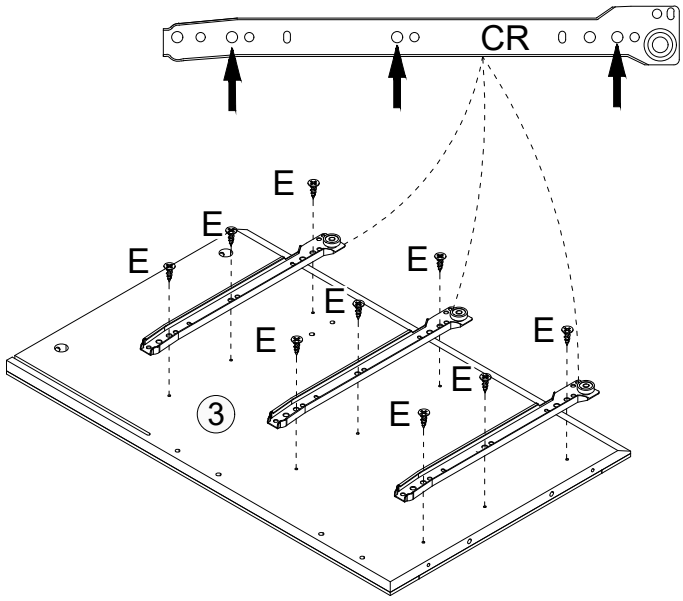
CR
E
E
E
E
E
E
E
E
E
3

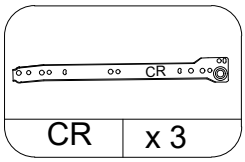
CR
CR
x 3

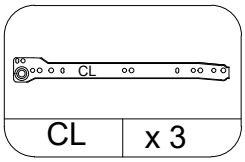
CL
CL
x 3

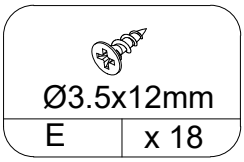
Ø3.5x12mm
E
x 18

STEP 2

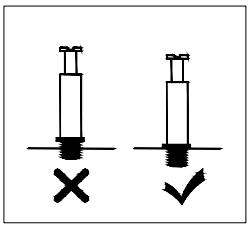

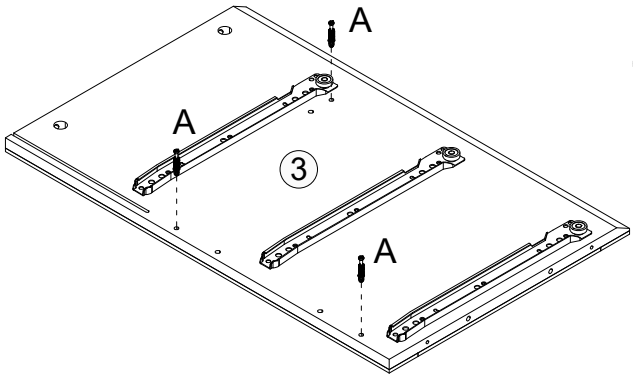
A
A
3
A

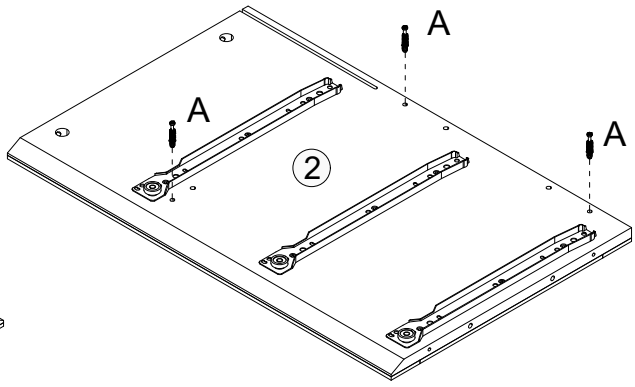
A
A
A
2

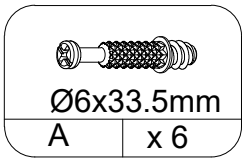
Ø6x33.5mm
A
x 6

STEP 3

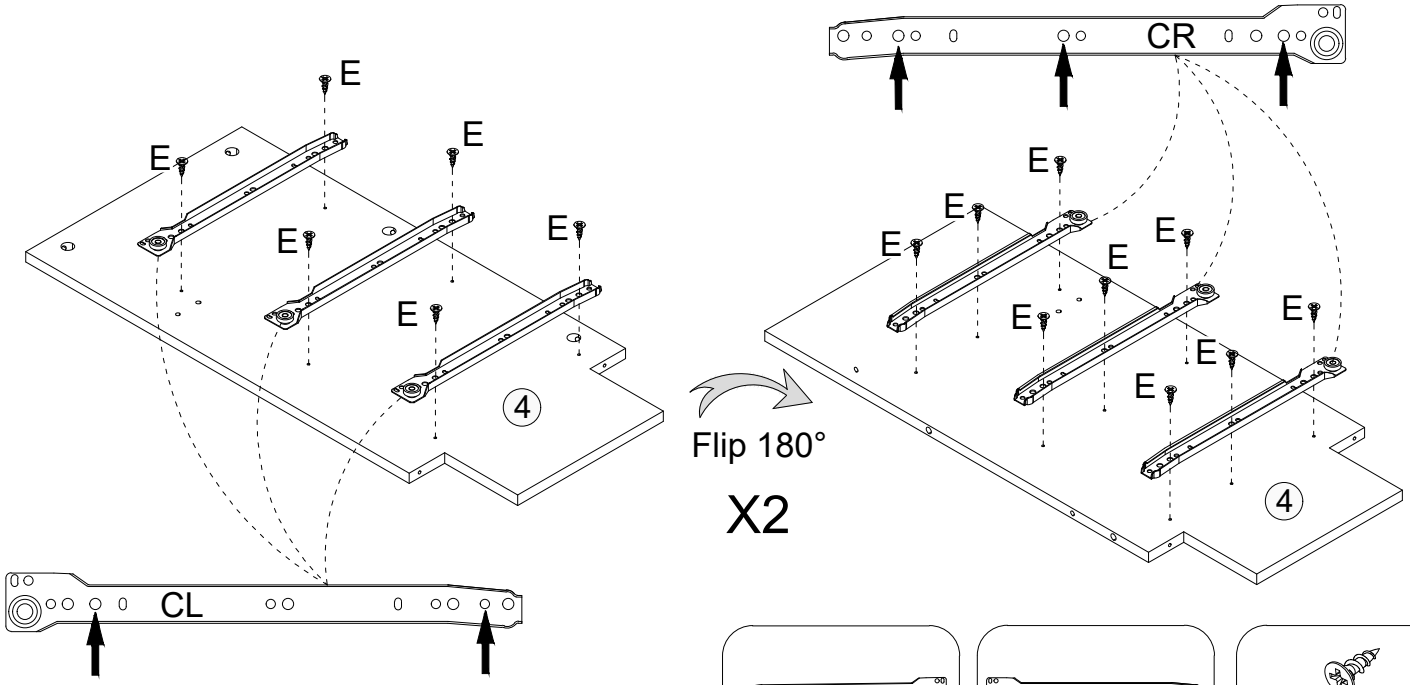

CR	x 6

CL	x 6

Ø3.5x12mm	
E	x 30

STEP 4

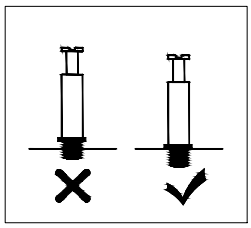

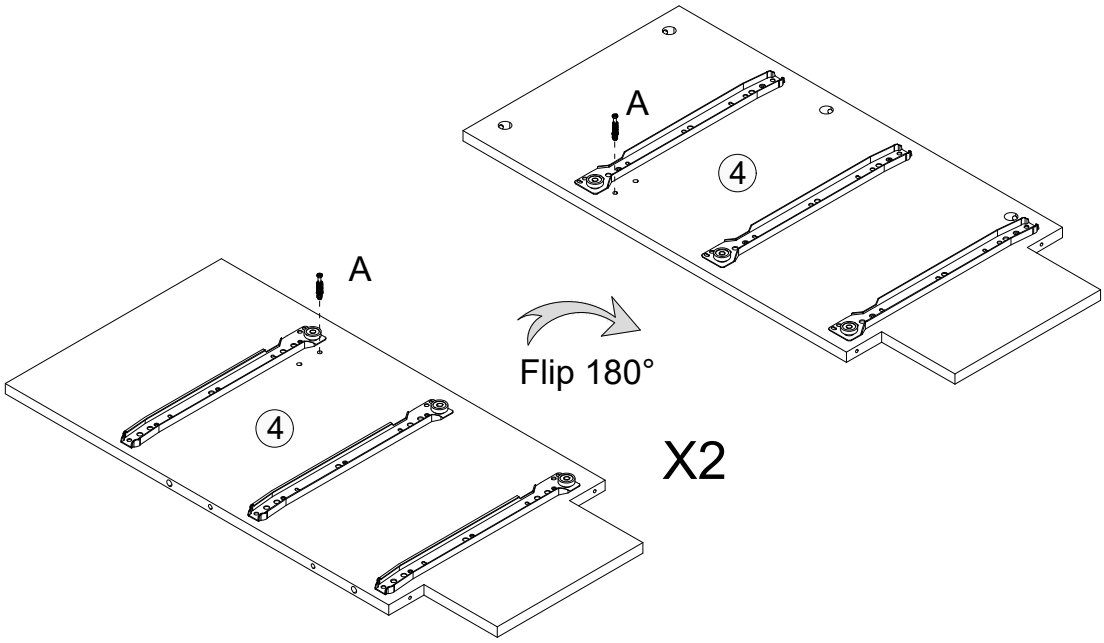

Ø6x33.5mm	
A	x 4

STEP 5

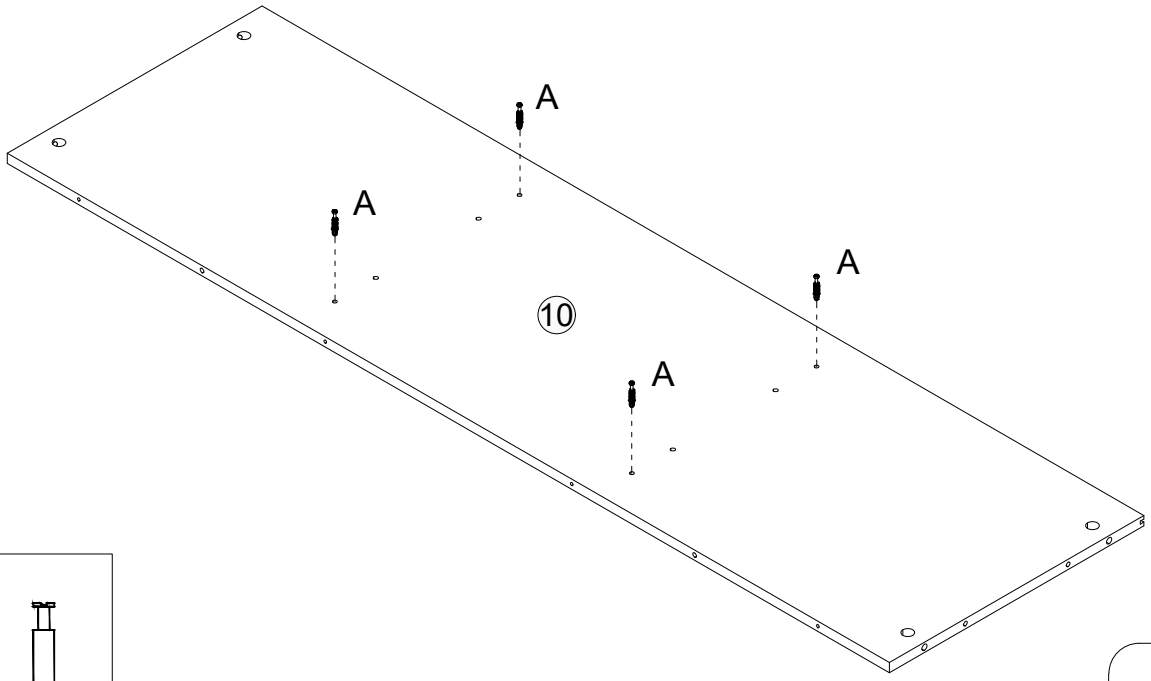

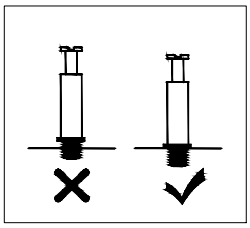

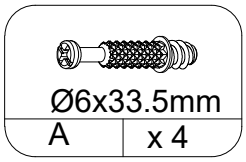

STEP 6

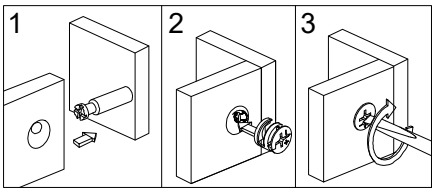

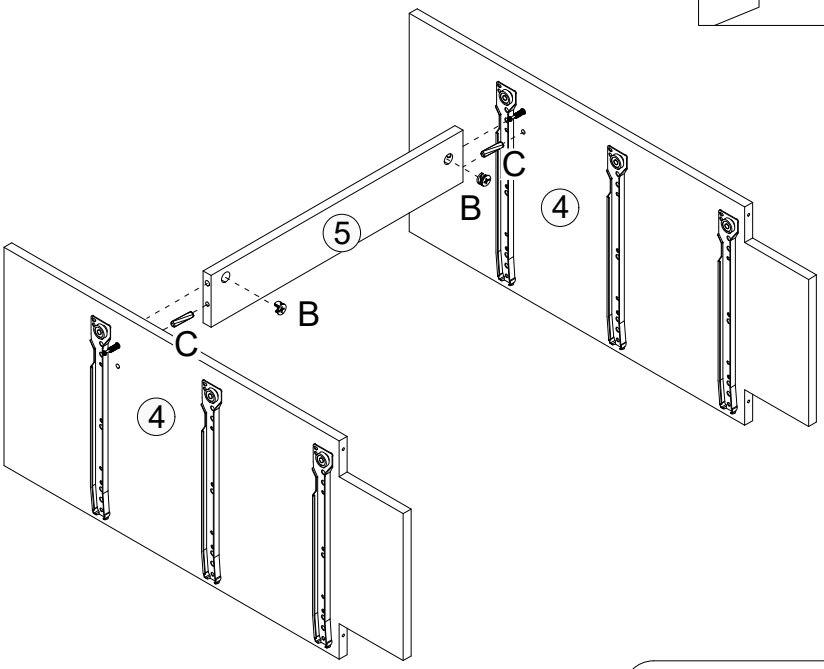

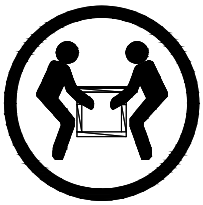

CAUTION: Heavy! You may need assistance with this step

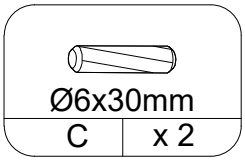

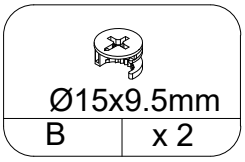

STEP 7

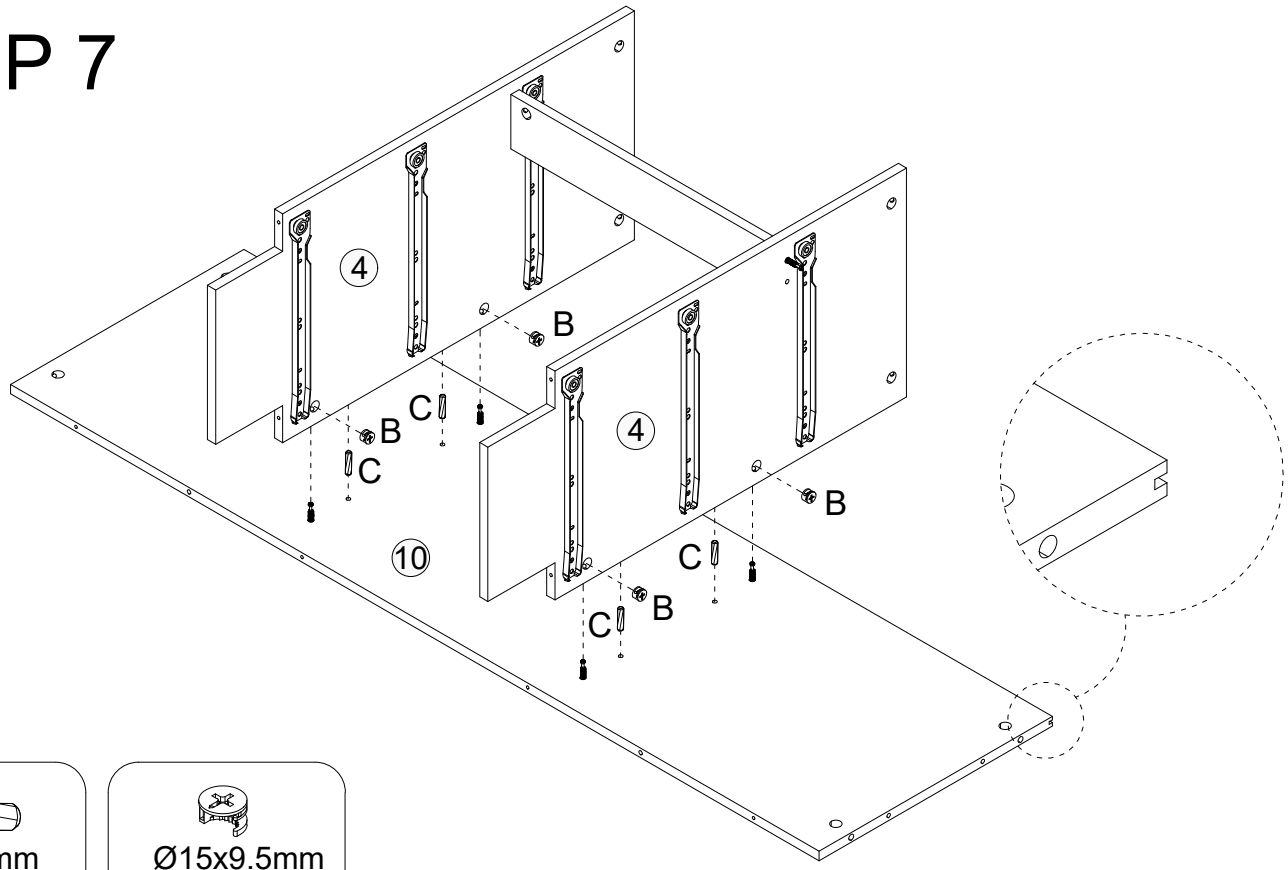

Ø6x30mm	
C	x 4

Ø15x9.5mm	
B	x 4

STEP 8

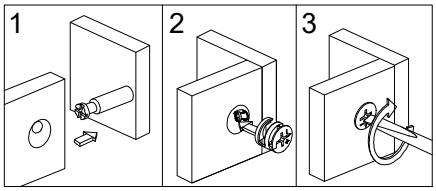

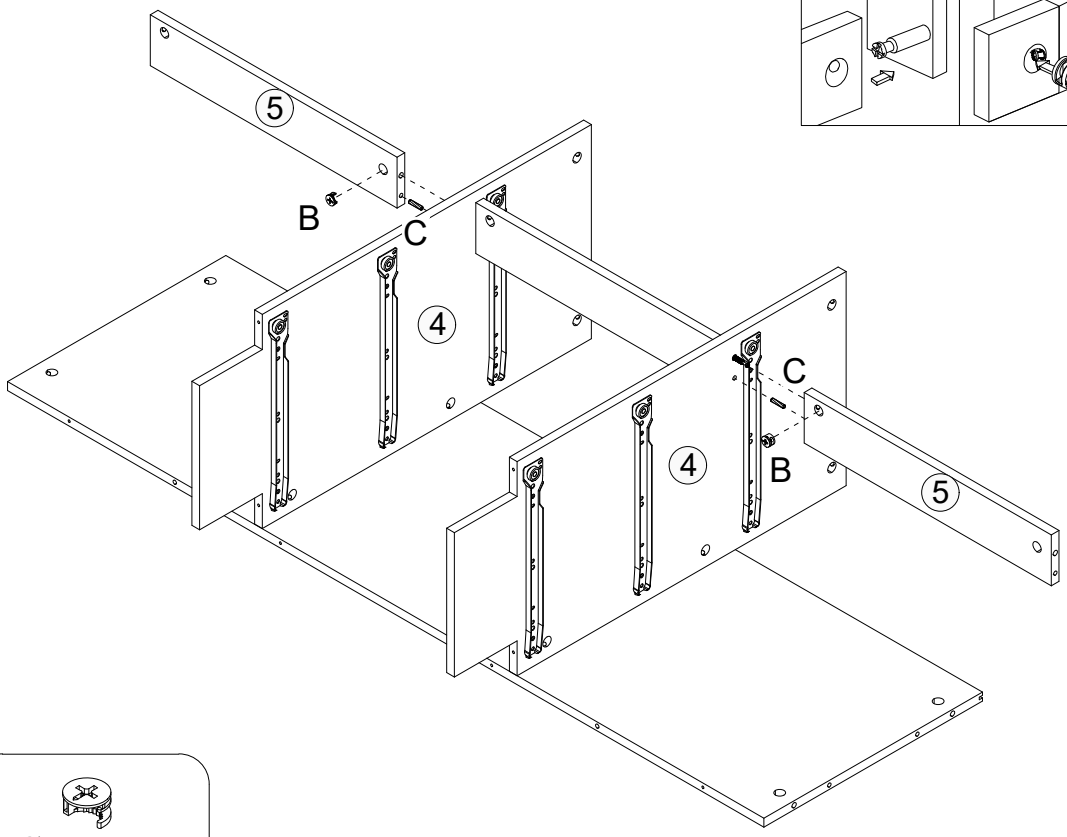

Ø6x30mm	
C	x 2

Ø15x9.5mm	
B	x 2

STEP 9

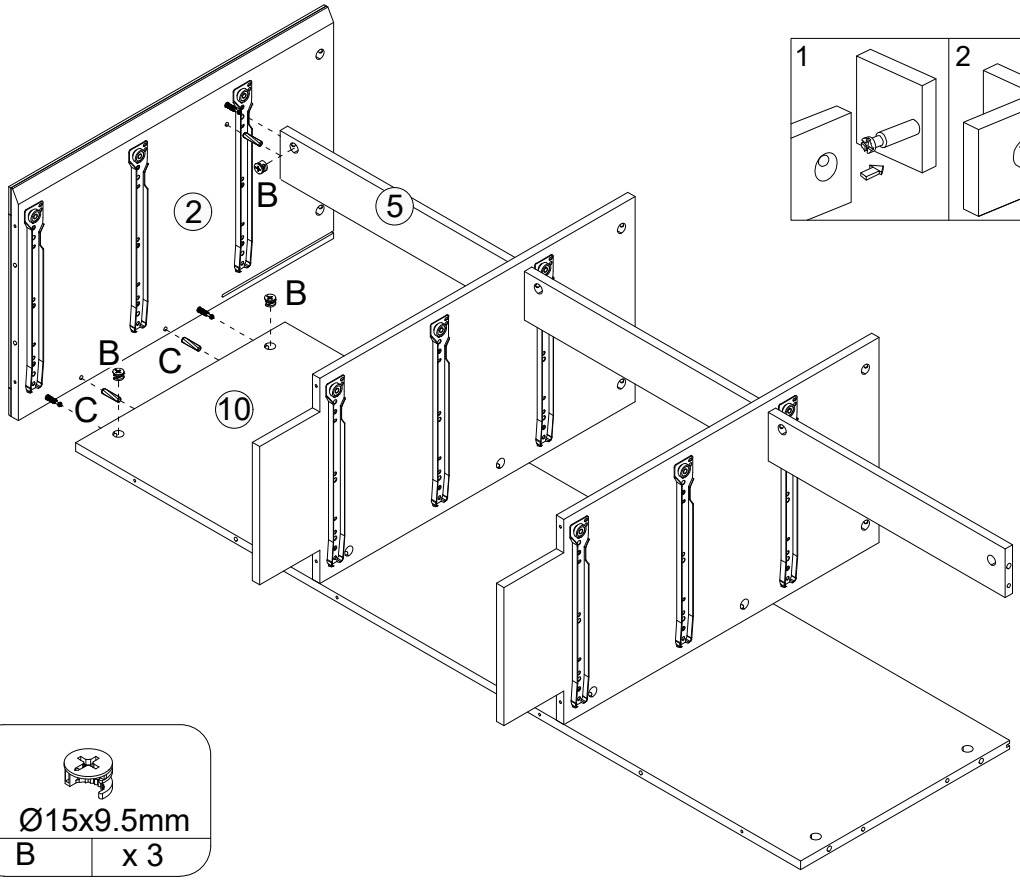

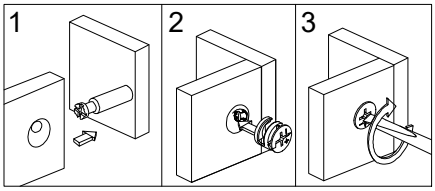

Ø6x30mm	
C	x 3

Ø15x9.5mm	
B	x 3

STEP 10

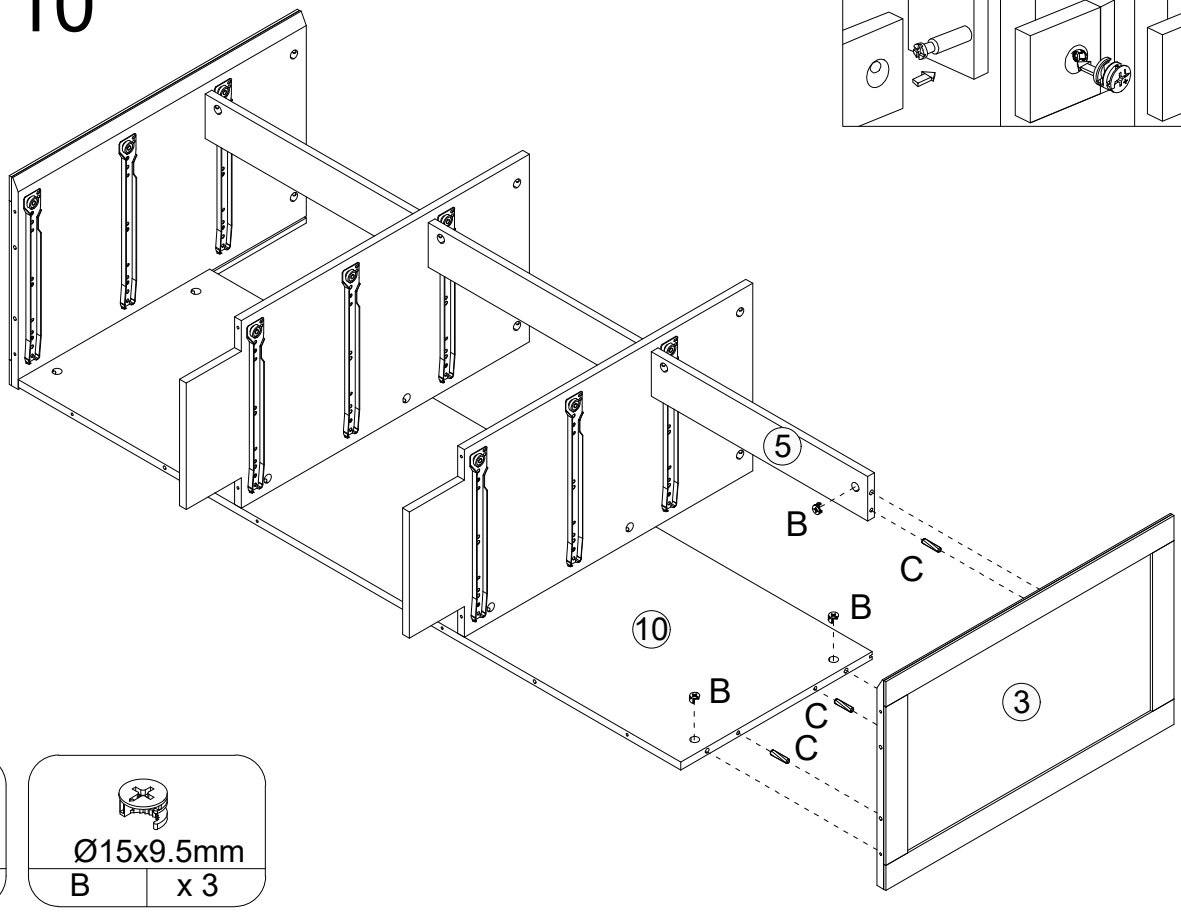

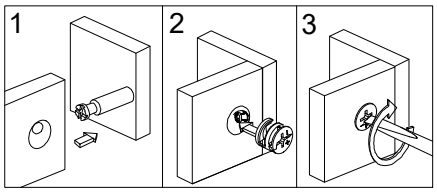

Ø6x30mm	
C	x 3

Ø15x9.5mm	
B	x 3

STEP 11

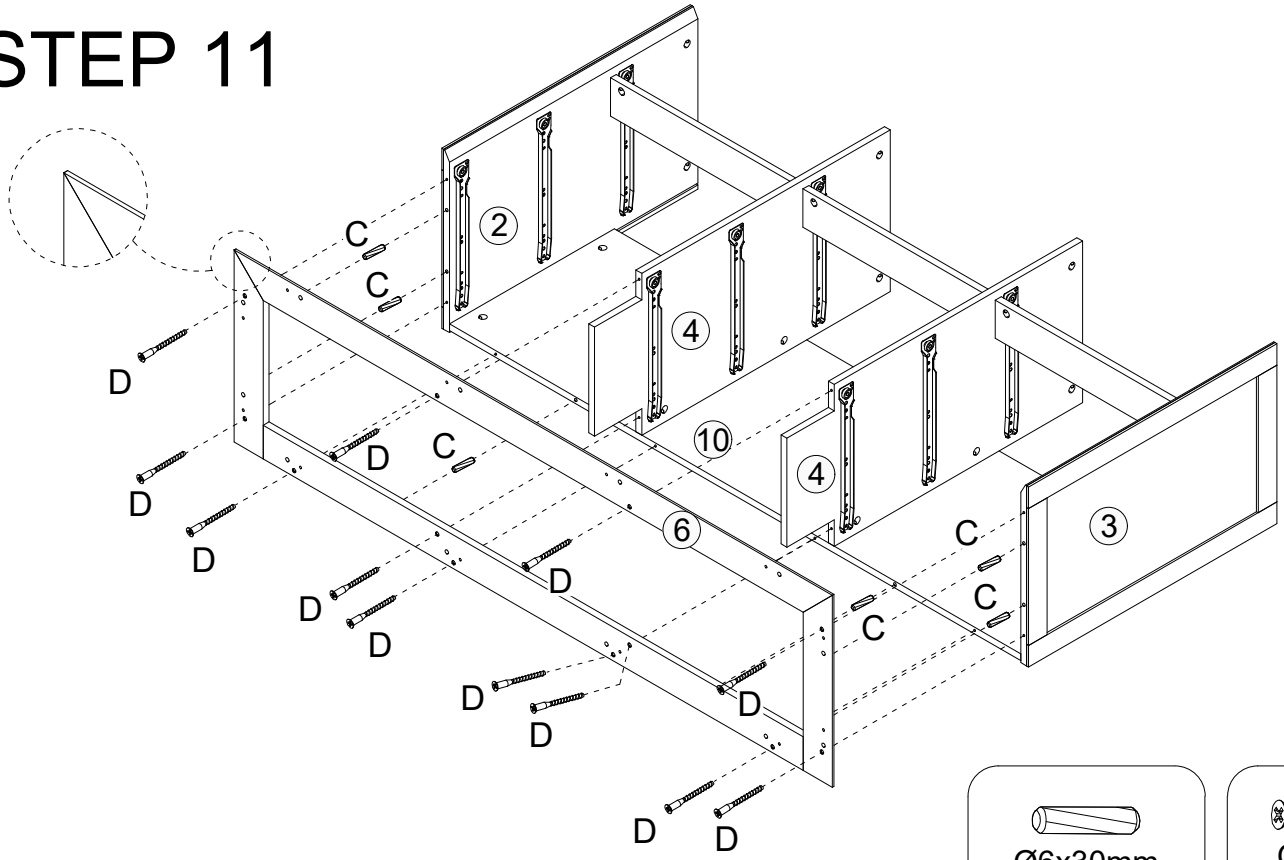

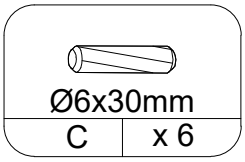

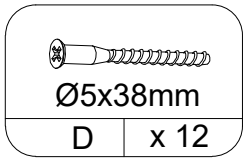

STEP 12

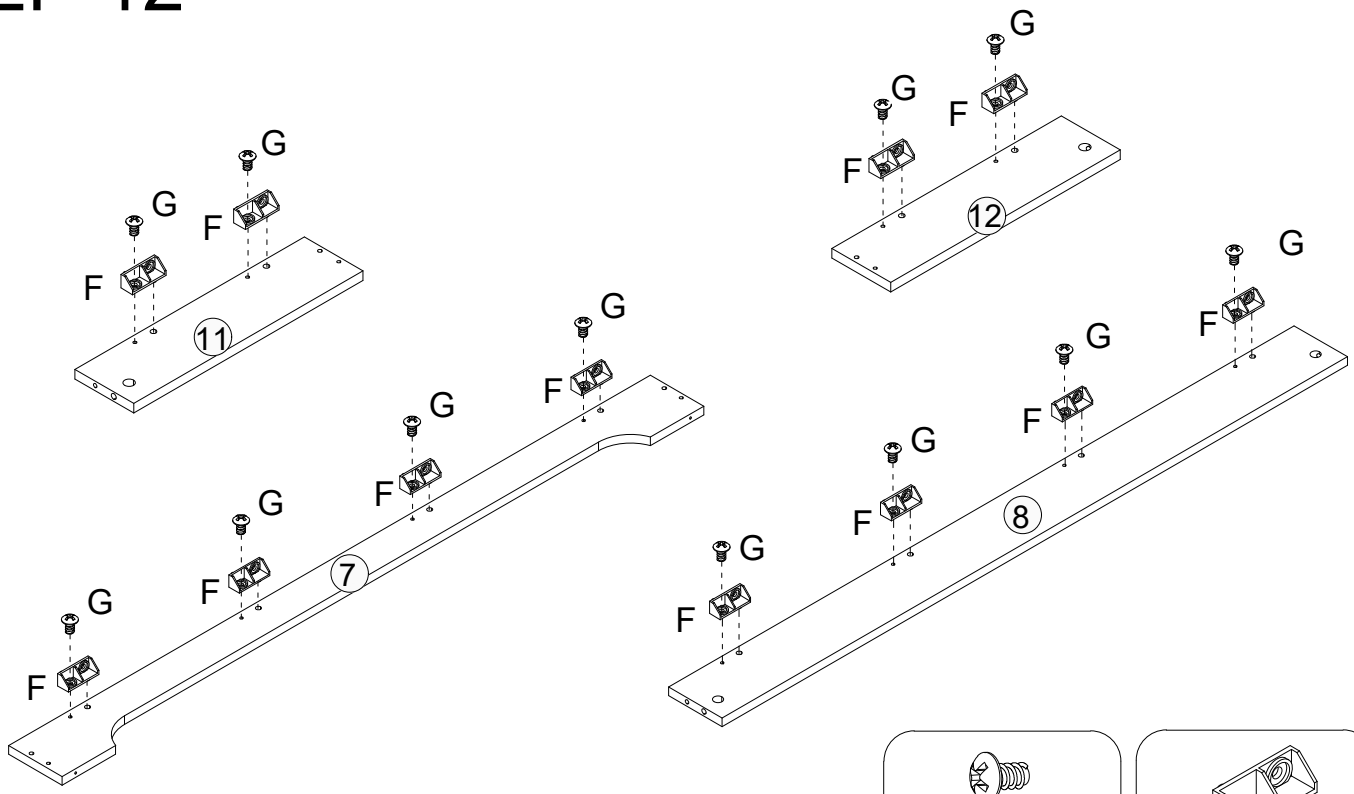

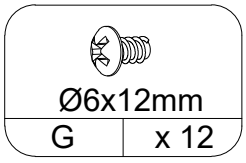

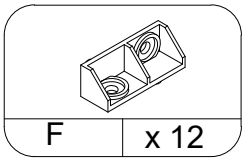

STEP 13

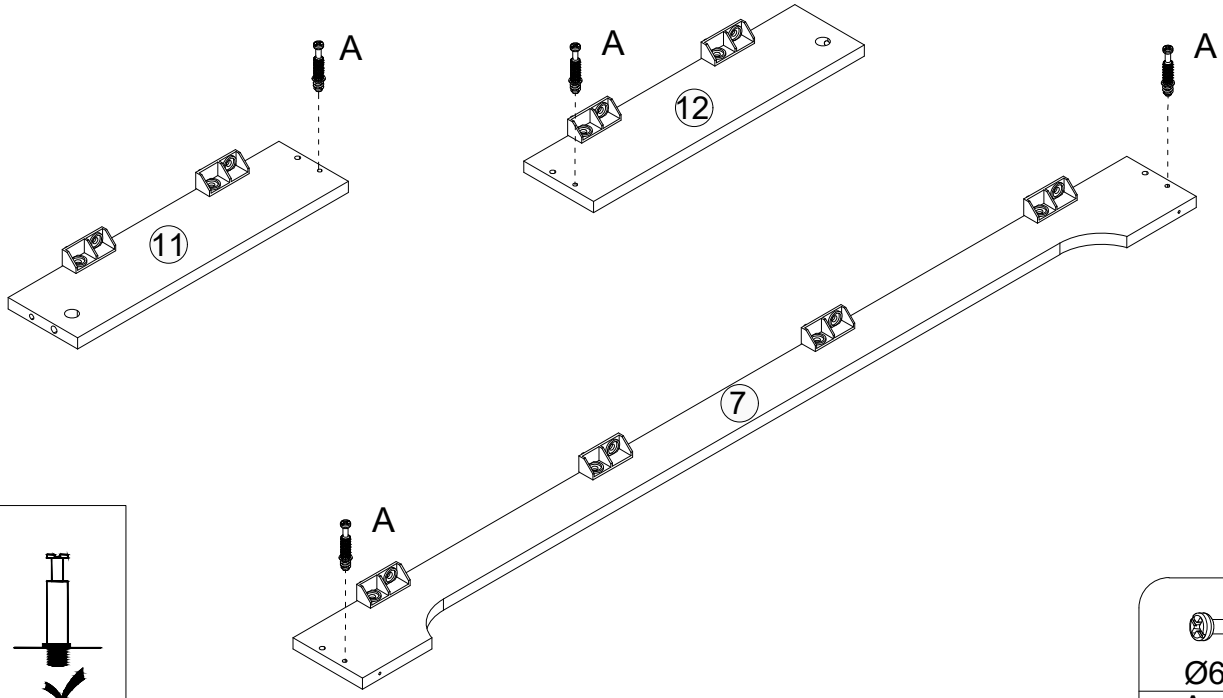

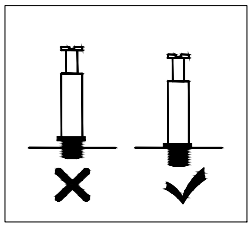

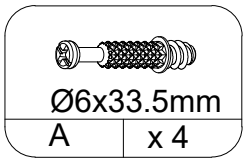

STEP 14

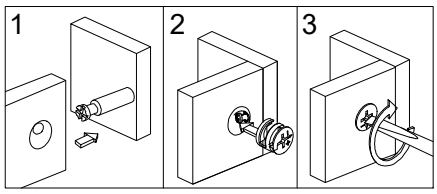

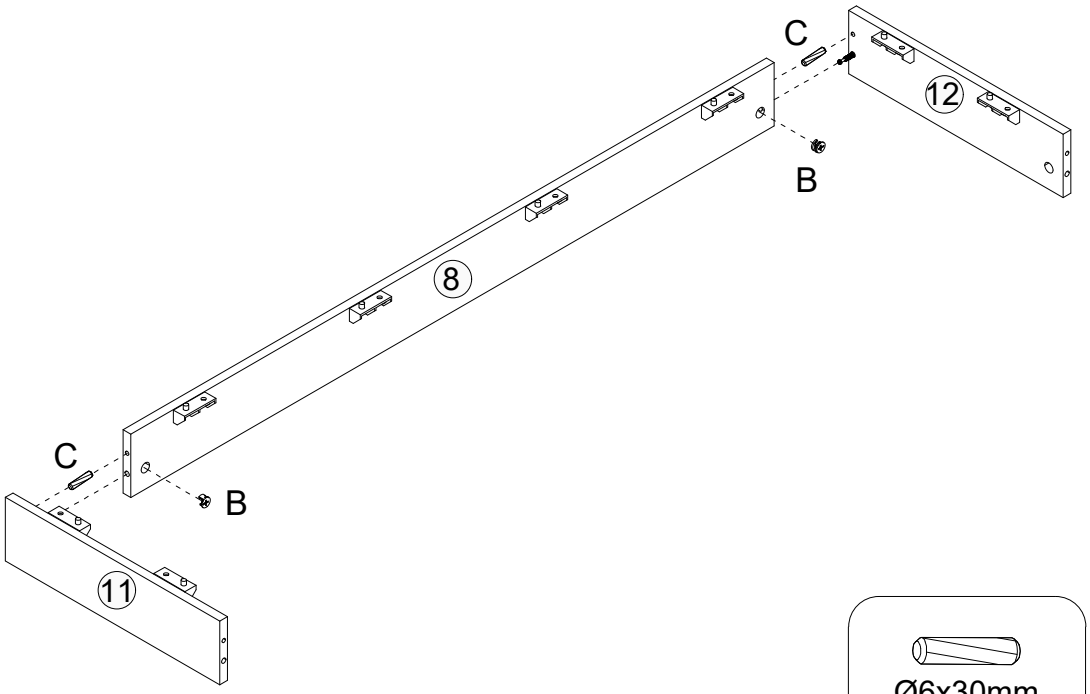

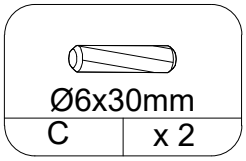

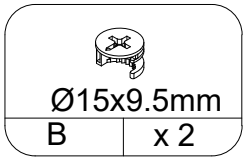

STEP 15

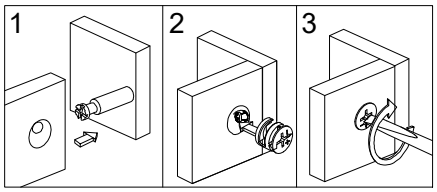

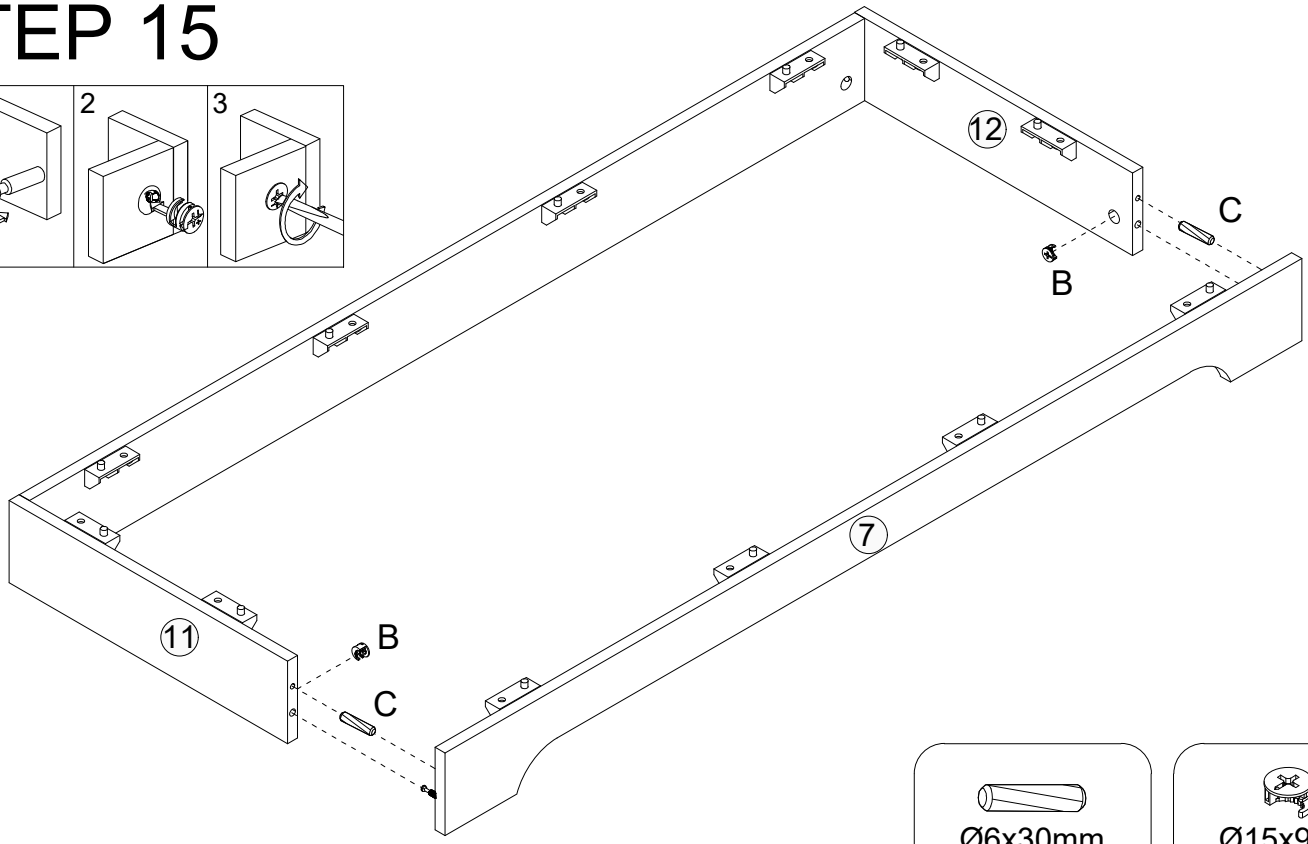

Ø6x30mm	
C	x 2

Ø15x9.5mm	
B	x 2

STEP 16

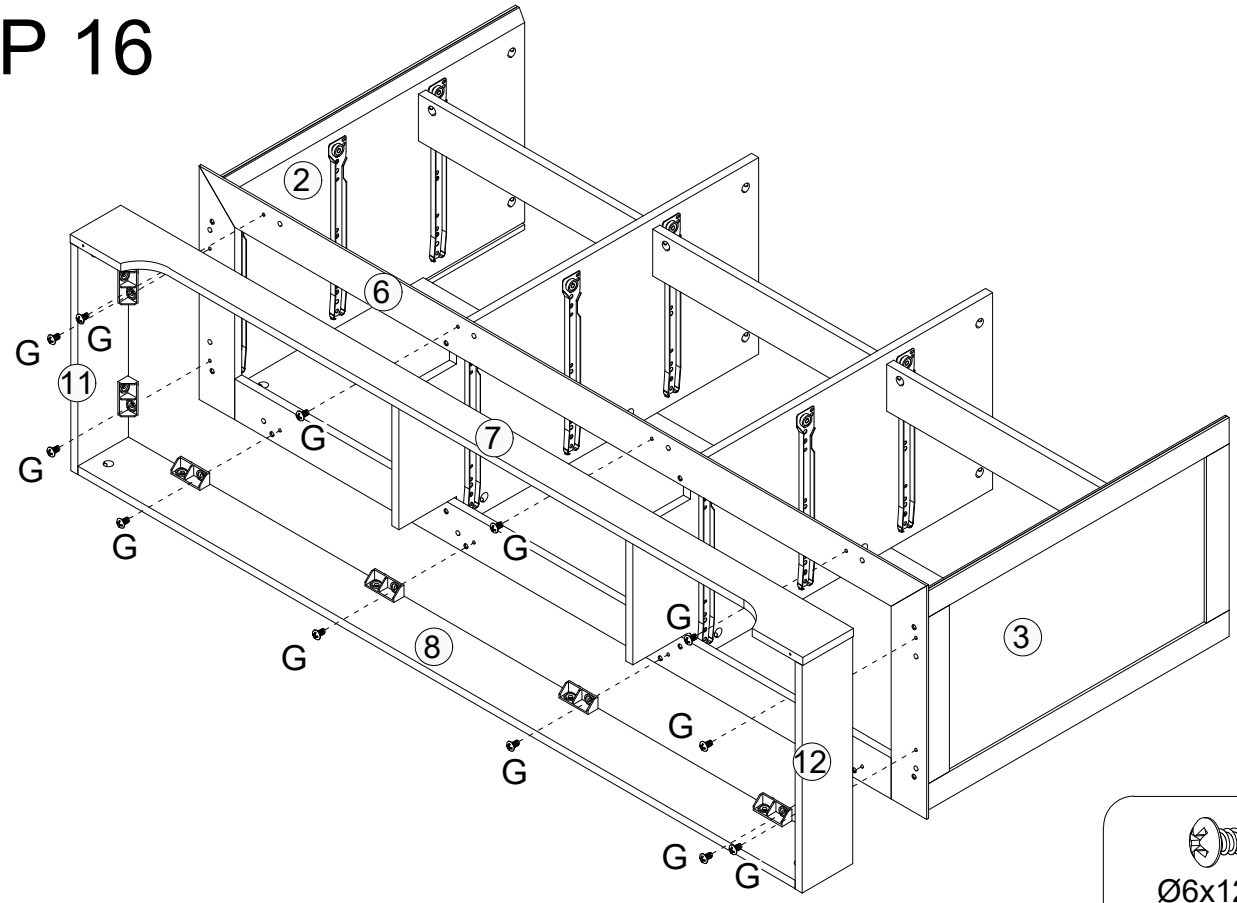

Ø6x12mm	
G	x 12

STEP 17

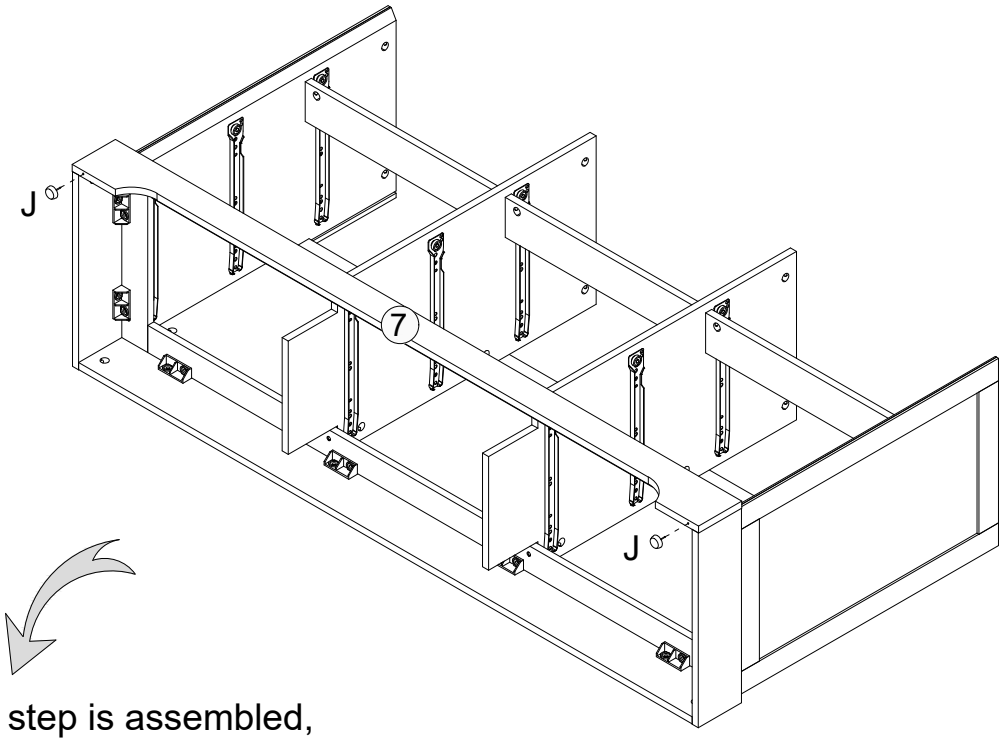

After this step is assembled,
flip it 90 degrees(to next step)

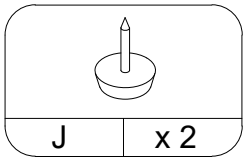

STEP 18

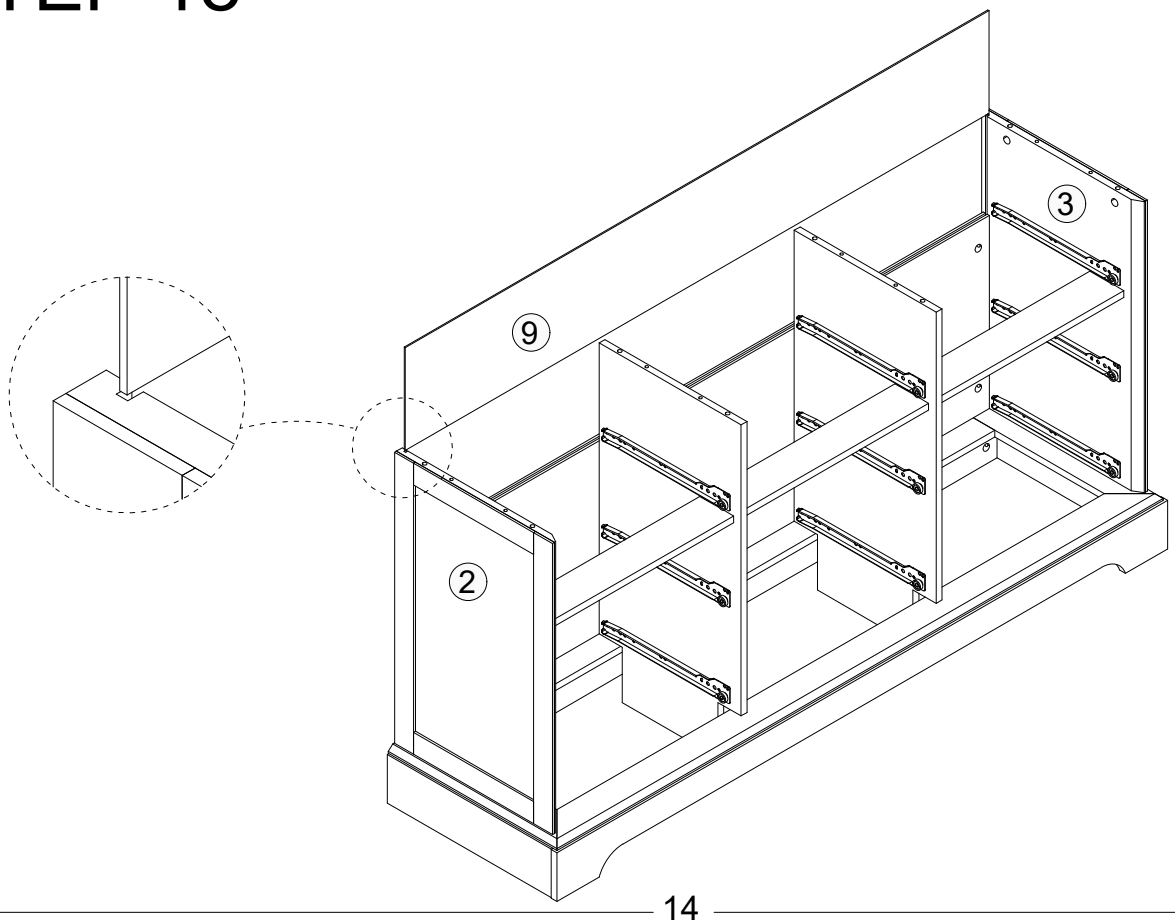

STEP 19

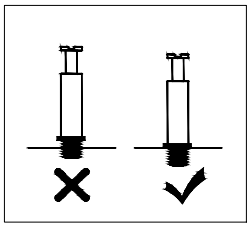

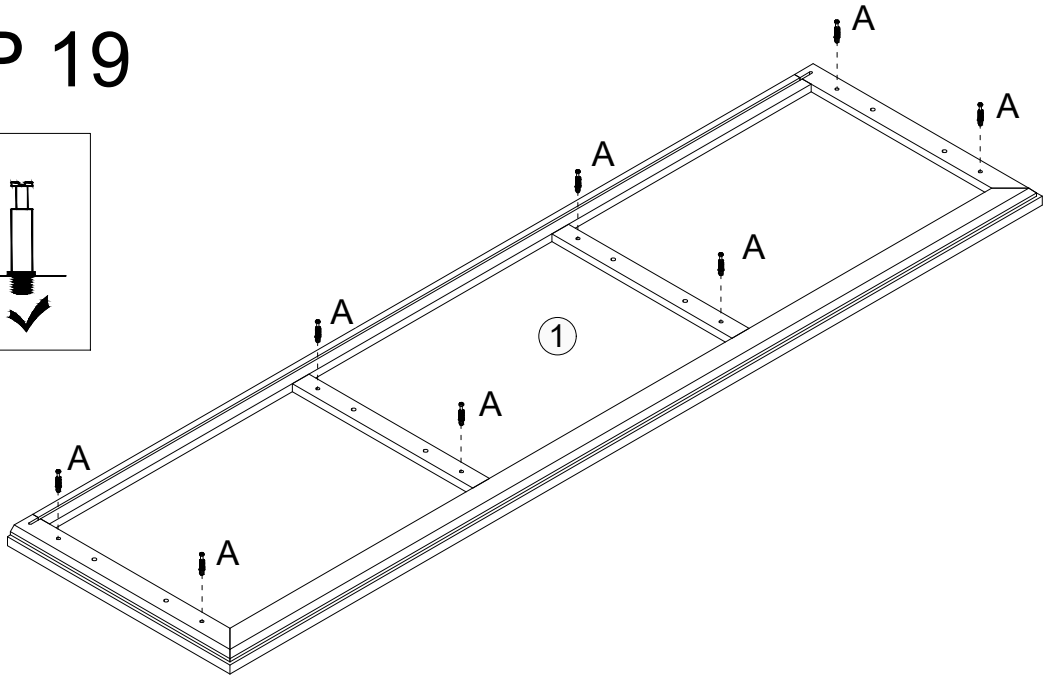

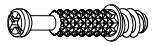

Ø6x33.5mm	
A	x 8

STEP 20

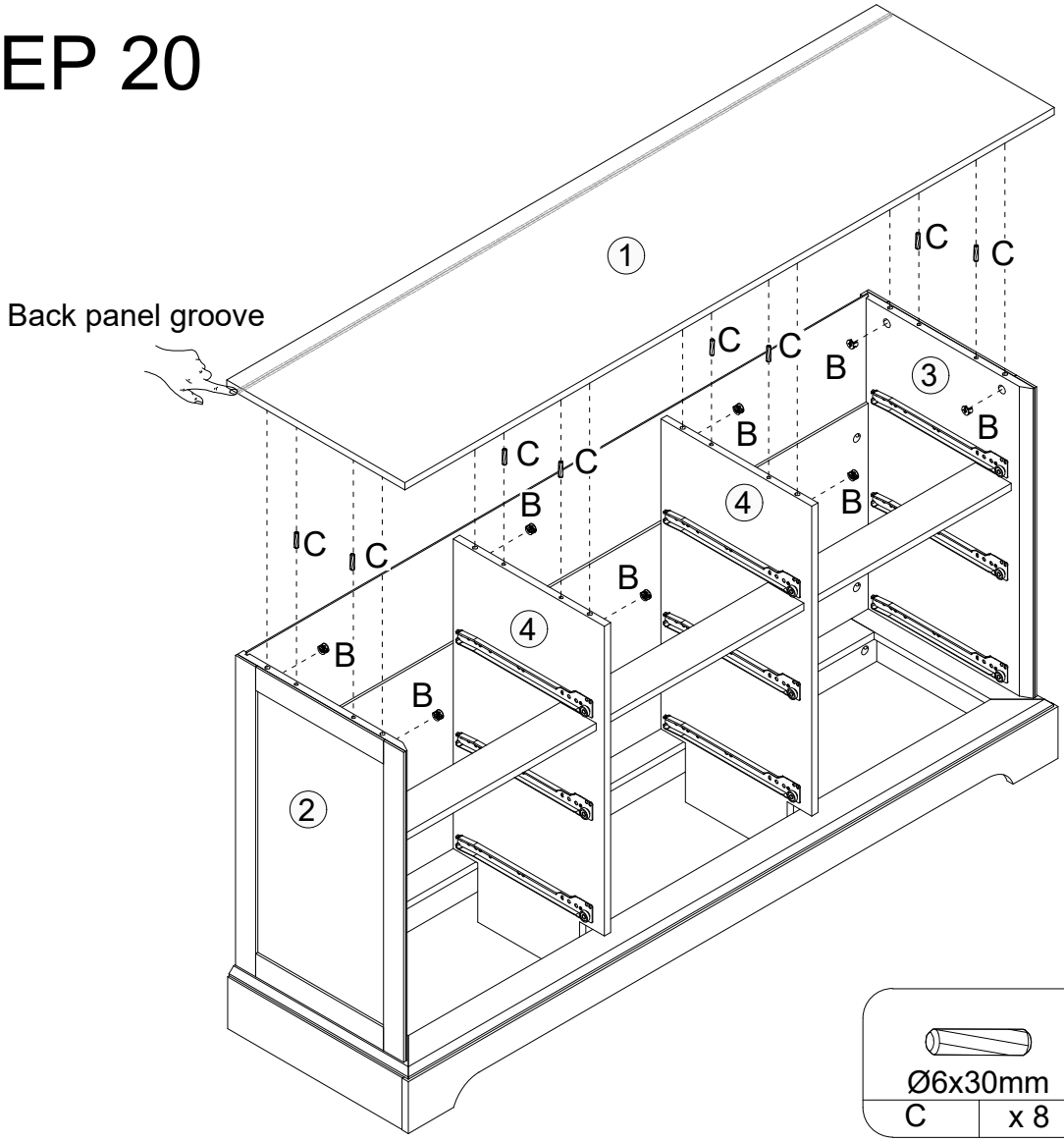

Ø6x30mm	
C	x 8

Ø15x9.5mm	
B	x 8

STEP 21

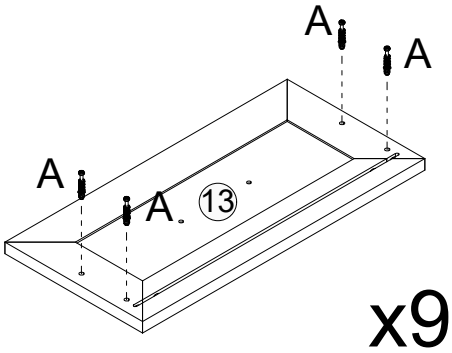

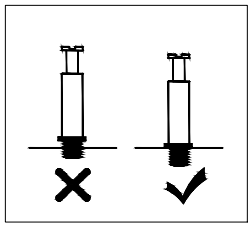

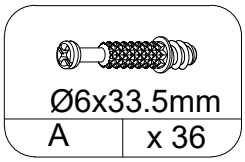

STEP 22

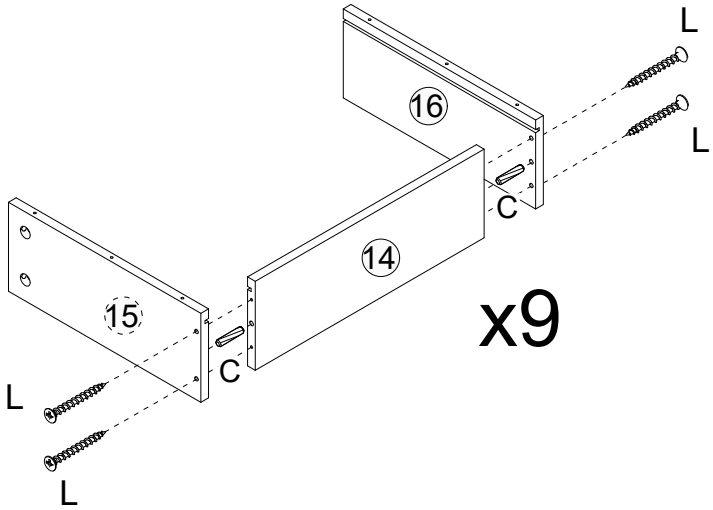

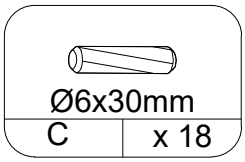

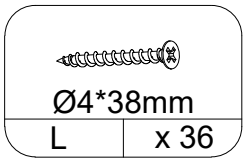

STEP 23

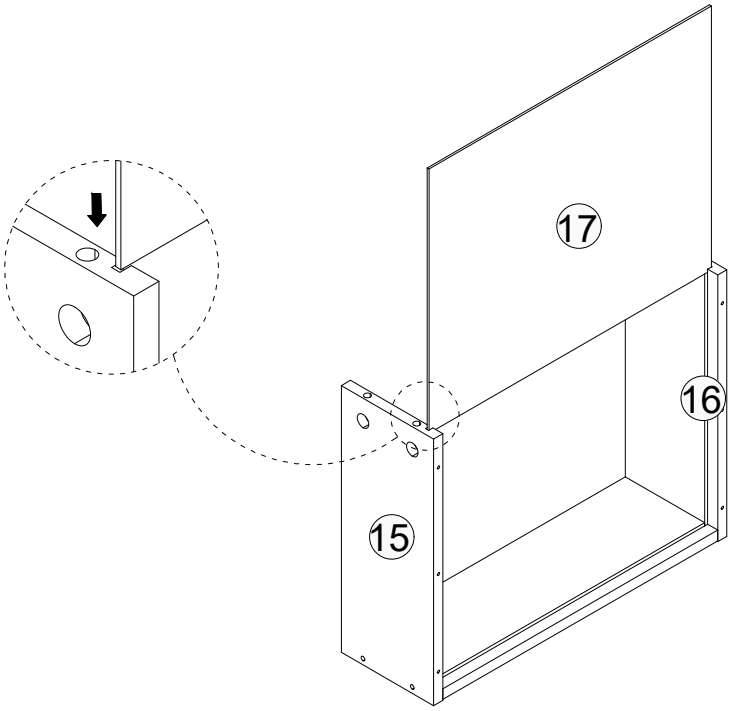

x9

STEP 24

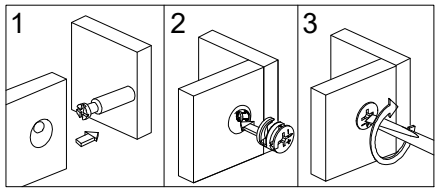

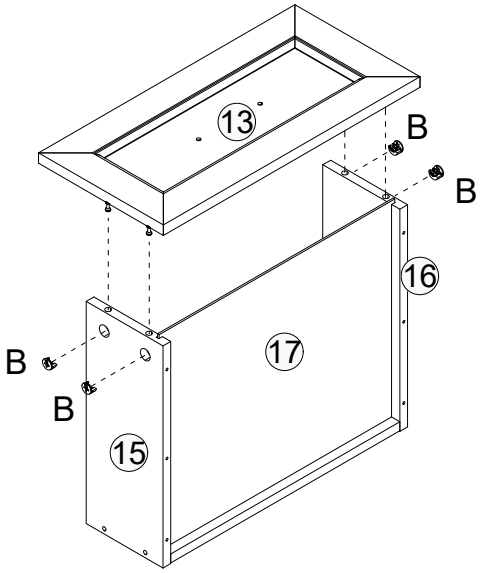

x9

Ø15x9.5mm	
B	x 36

STEP25

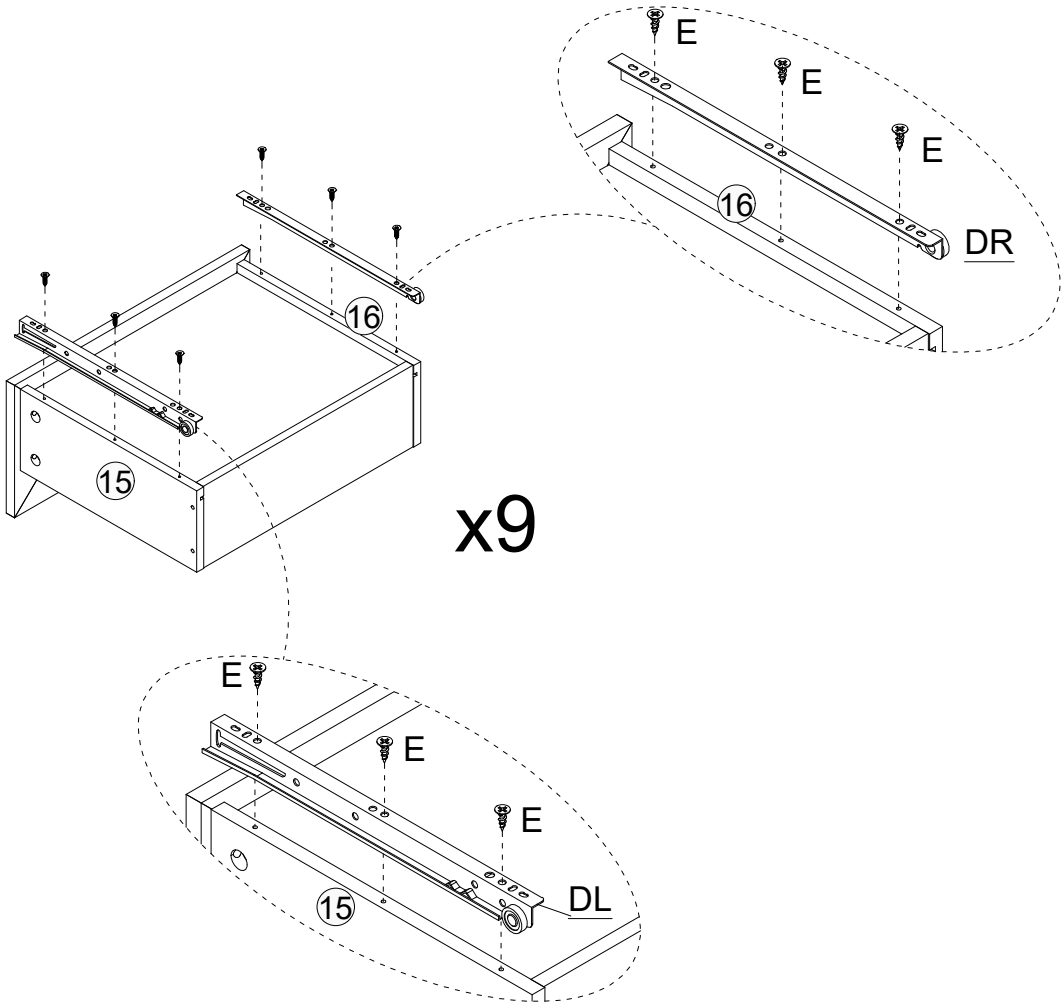

Ø3.5x12mm	
E	x 54
DR	x 9
DL	x 9

STEP26

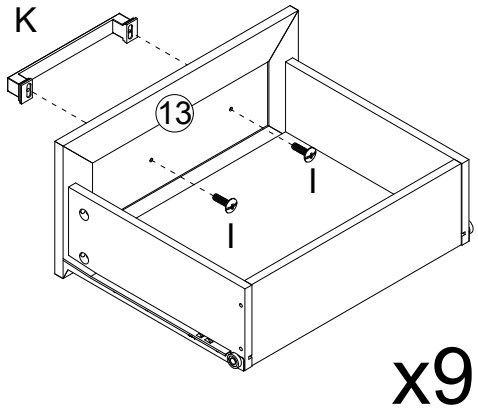

M4x8mm	
I	x 18

K	x 9

STEP27

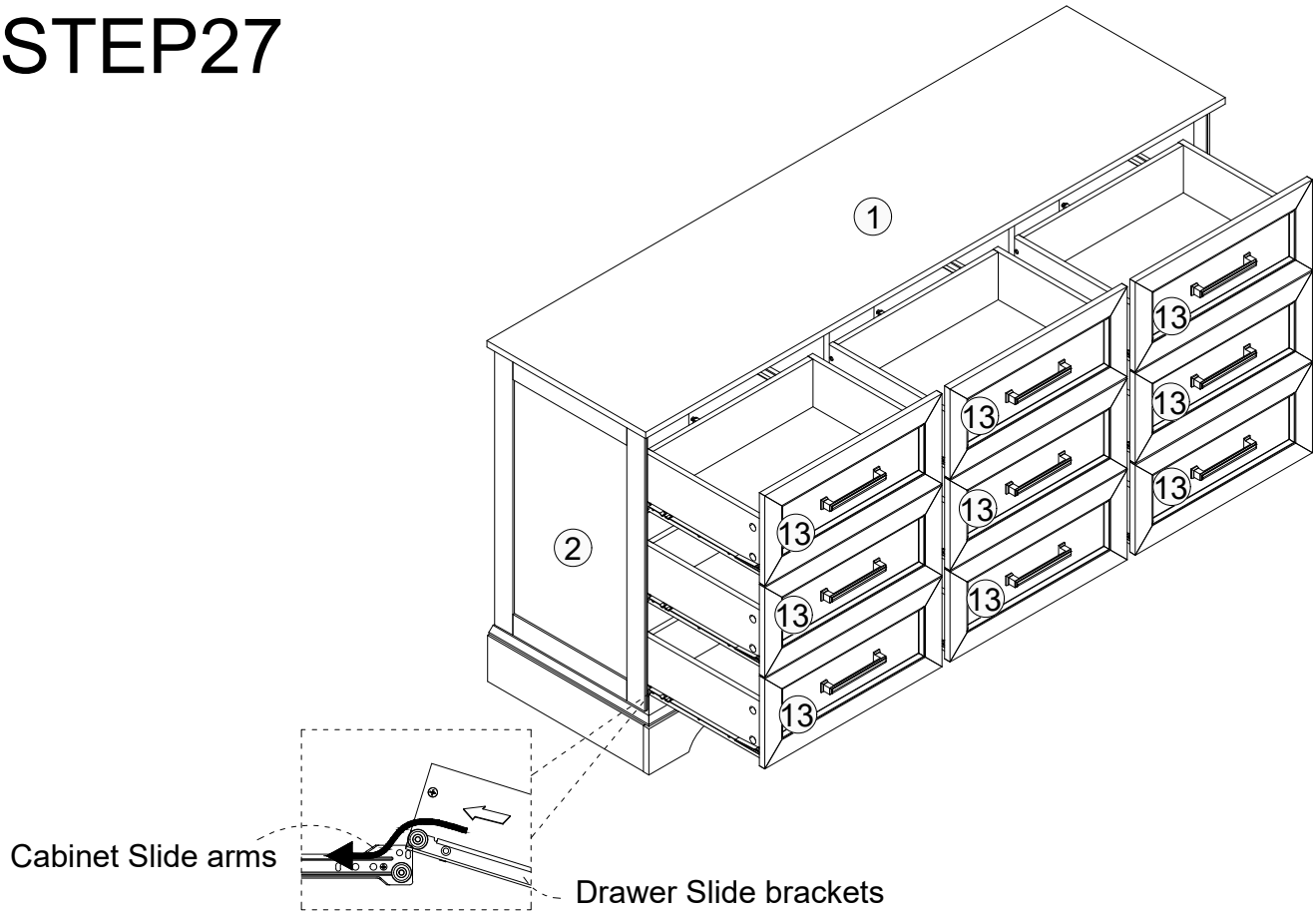

STEP 28

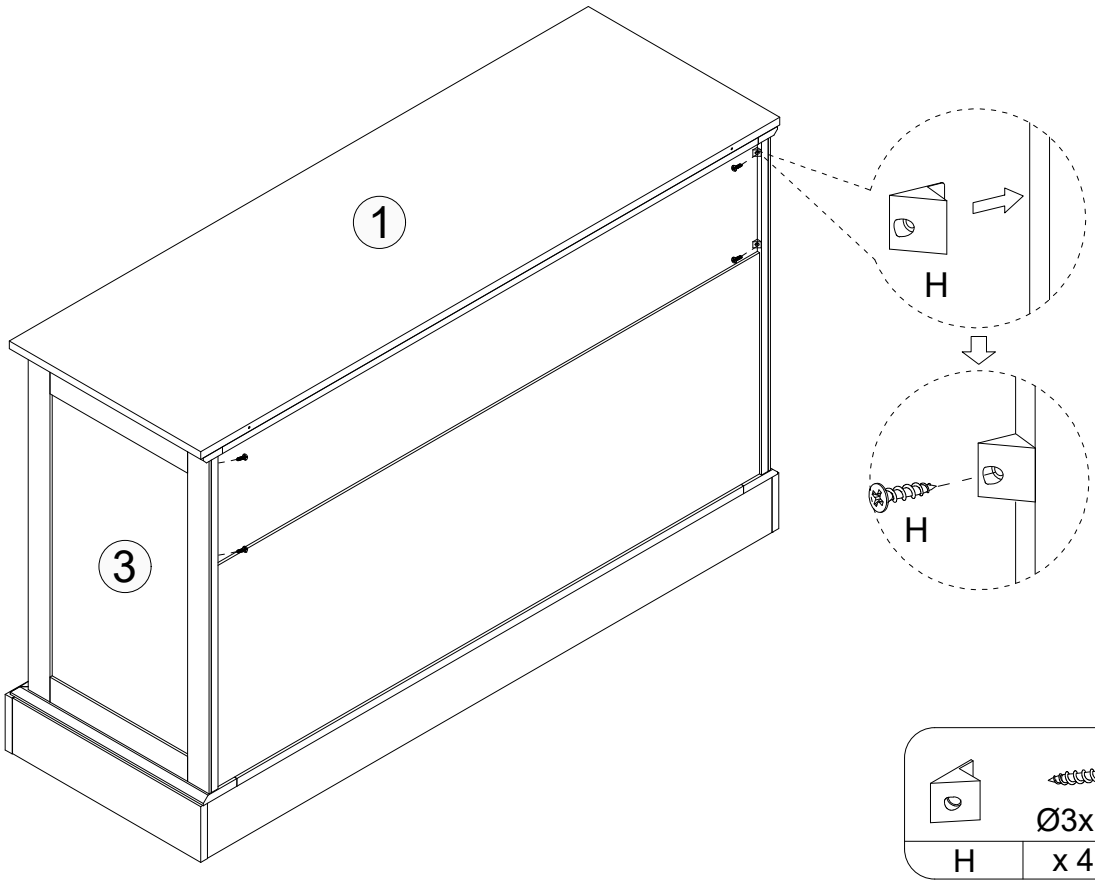

STEP 29

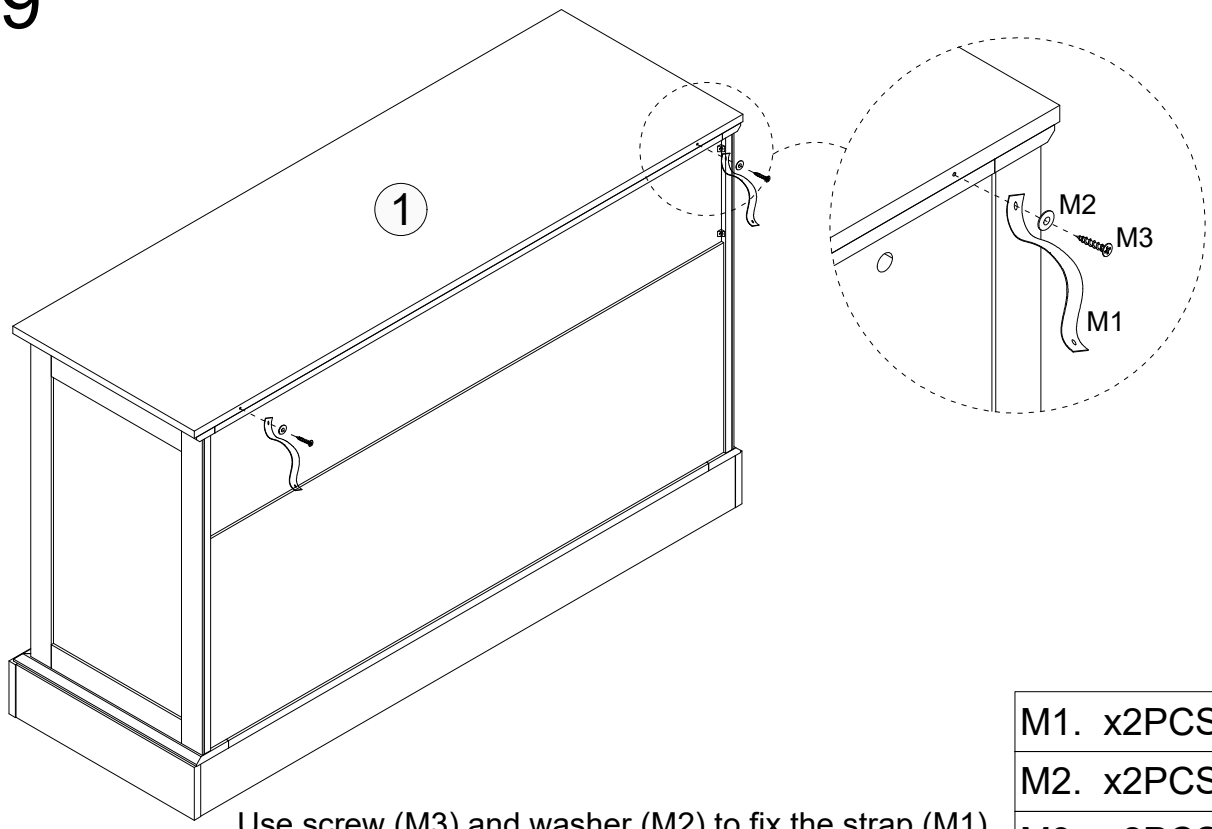

Use screw (M3) and washer (M2) to fix the strap (M1) follow position of holes on the peice 1.

M1.	x2PCS
M2.	x2PCS
M3.	x2PCS

STEP 30

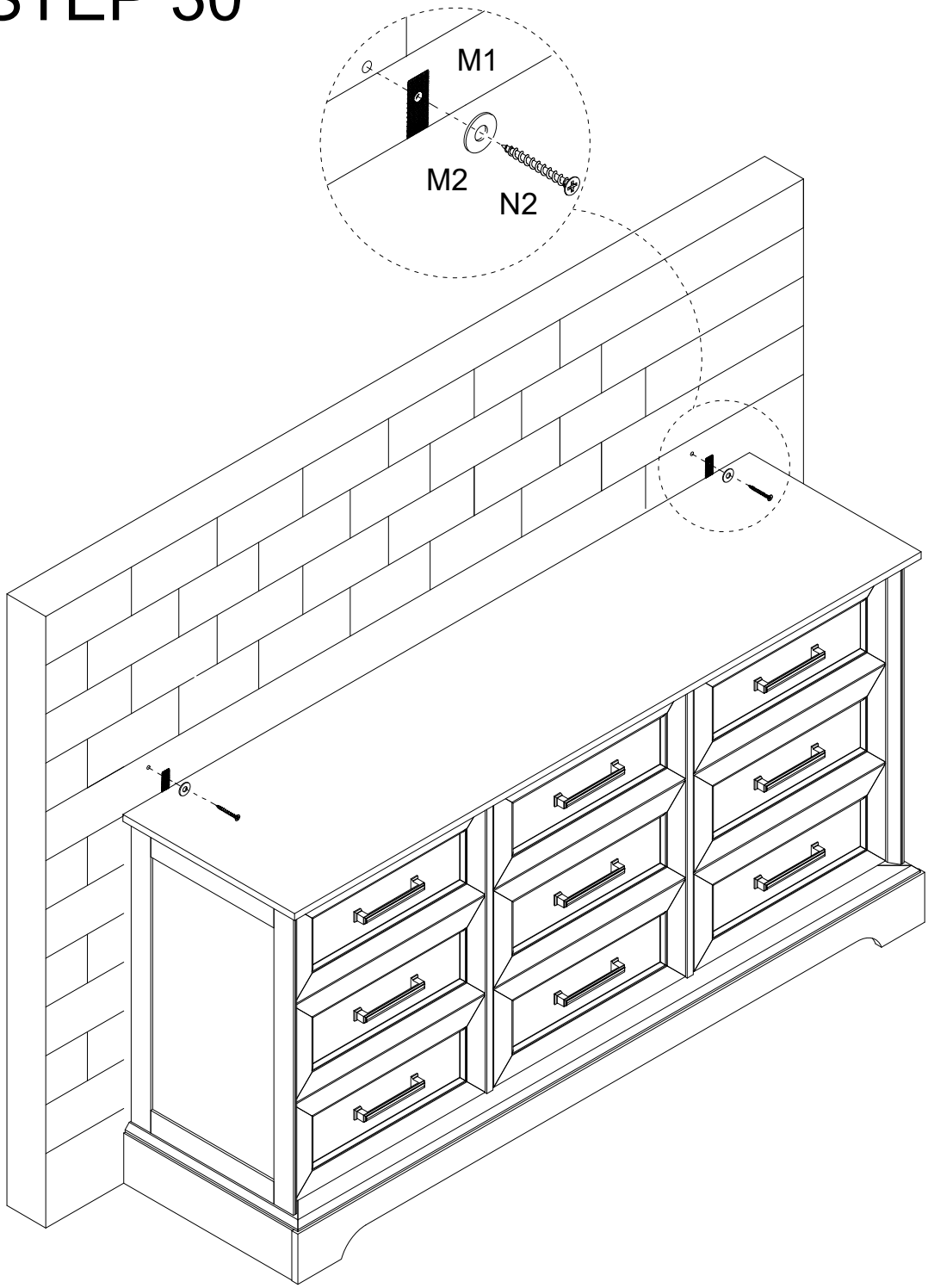

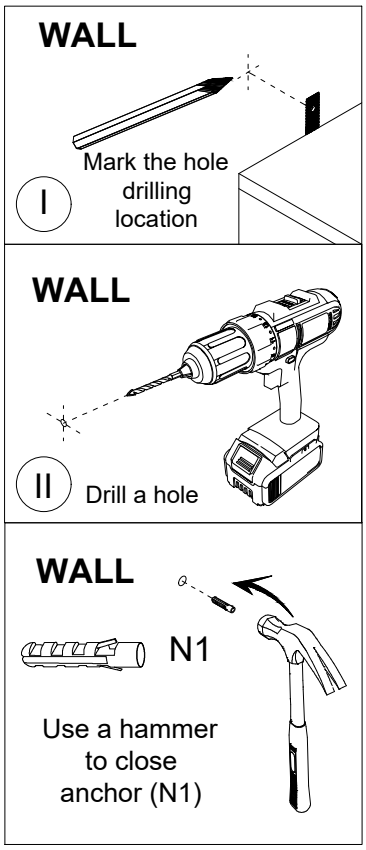

Step1: determine the location of the anti-overturning on the wall and then mark the position after confirming the product has been balanced.
Step 2: drill the hole and then fixed the anchor (N1) on the wall.
Step 3: use screw (N2) to fix the strap (M1), (M2) on the wall .

N1. x2PCS
N2. x2PCS
M2. x2PCS

FURNITURE CARE AND MAINTENANCE

Medium - Density Fiberboard and Particle board

Thank you for your purchase. We want your item to last as long as possible. To ensure the product gives you years of service, please refer to this care and maintenance guide.

MAINTENANCE

· Tighten all bolts and screws again within the first 2 weeks of assembly
· Check the tightness of all bolts every 2 months, tighten them if necessary

CLEANING

· Clean the surface of the MDF (medium - density fiberboard) or PB (particle board) with a lightly dampened cloth.
· Small amount of mild soap can be used if necessary
- **Dry the surface immediately after cleaning.**

⚠ DO NOT use bleach or alcohol detergent to clean the surface.
⚠ DO NOT apply wood treatment on parts made with MDF and PB.
Medium - density fiberboard and Particle board will swell and distort when suffer from water damage.
Make sure to dry the furniture immediately after cleaning