# 36*80 inch White Primed 5 Raised Panel Arc Sliding Pocket Door Frame And Track Hardware Kits With Privacy Pull Installation

Any question please contact us:
**support@jubest.com**

MYPD5P-T36x80IN+HD

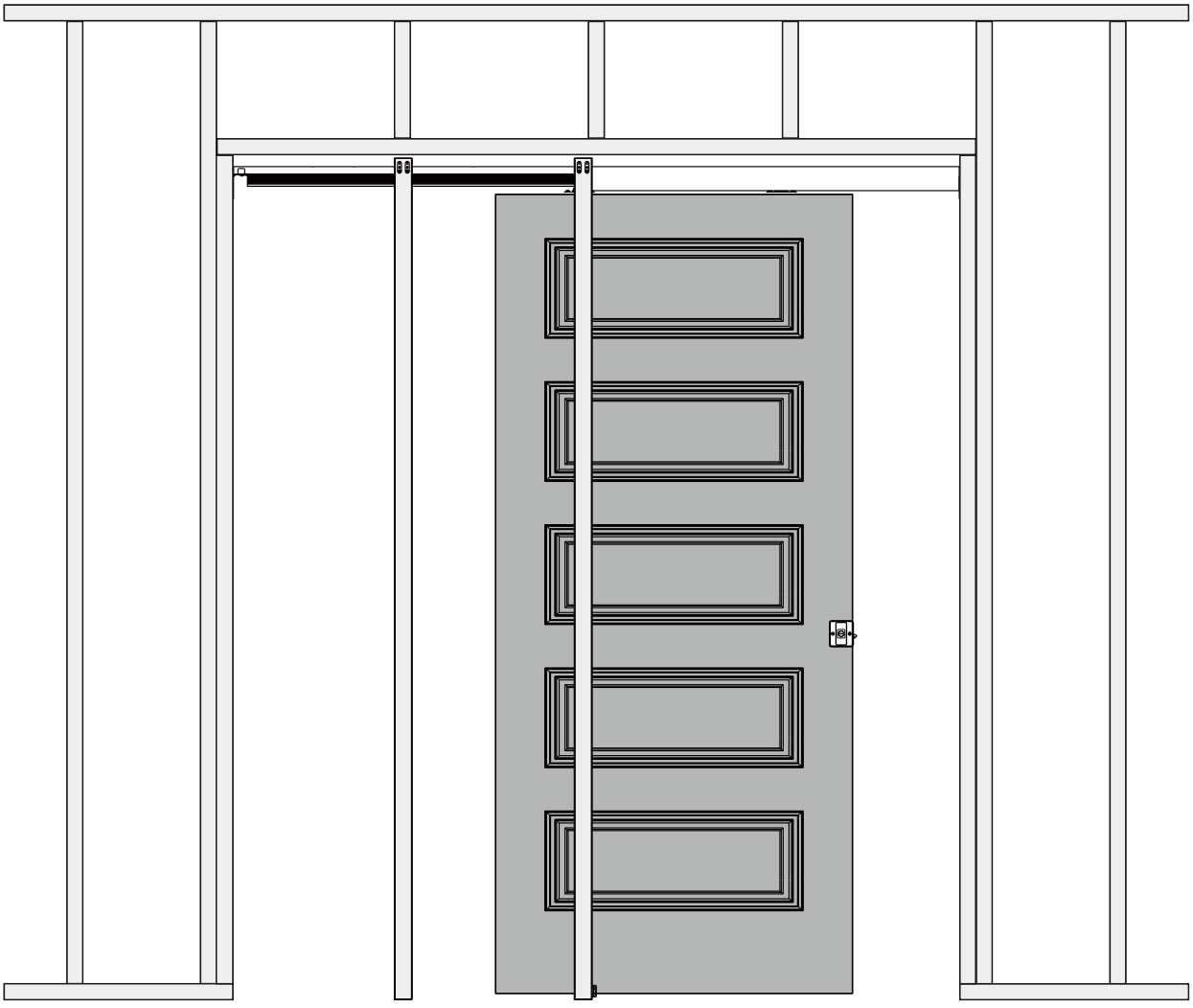

# Pre-installation

## TOOLS REQUIRED

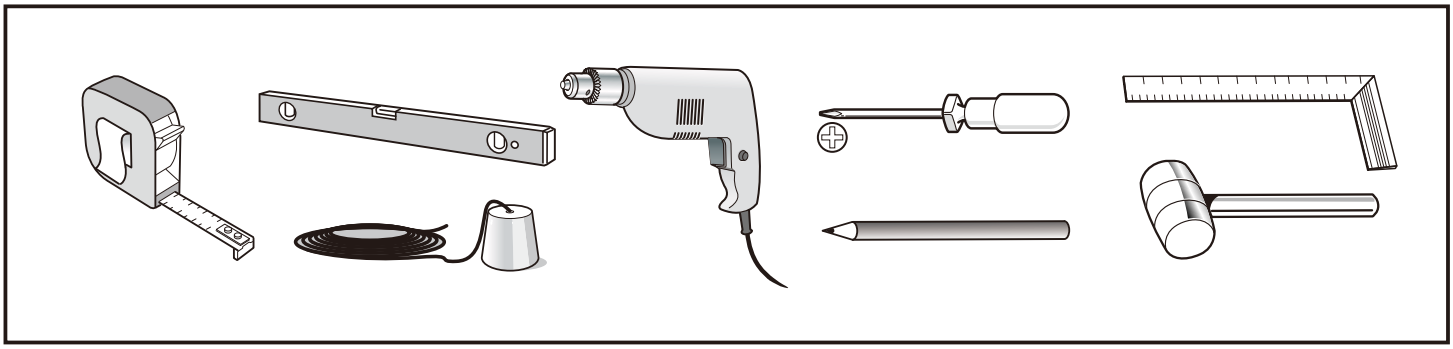

## WHAT IS IN THE BOX

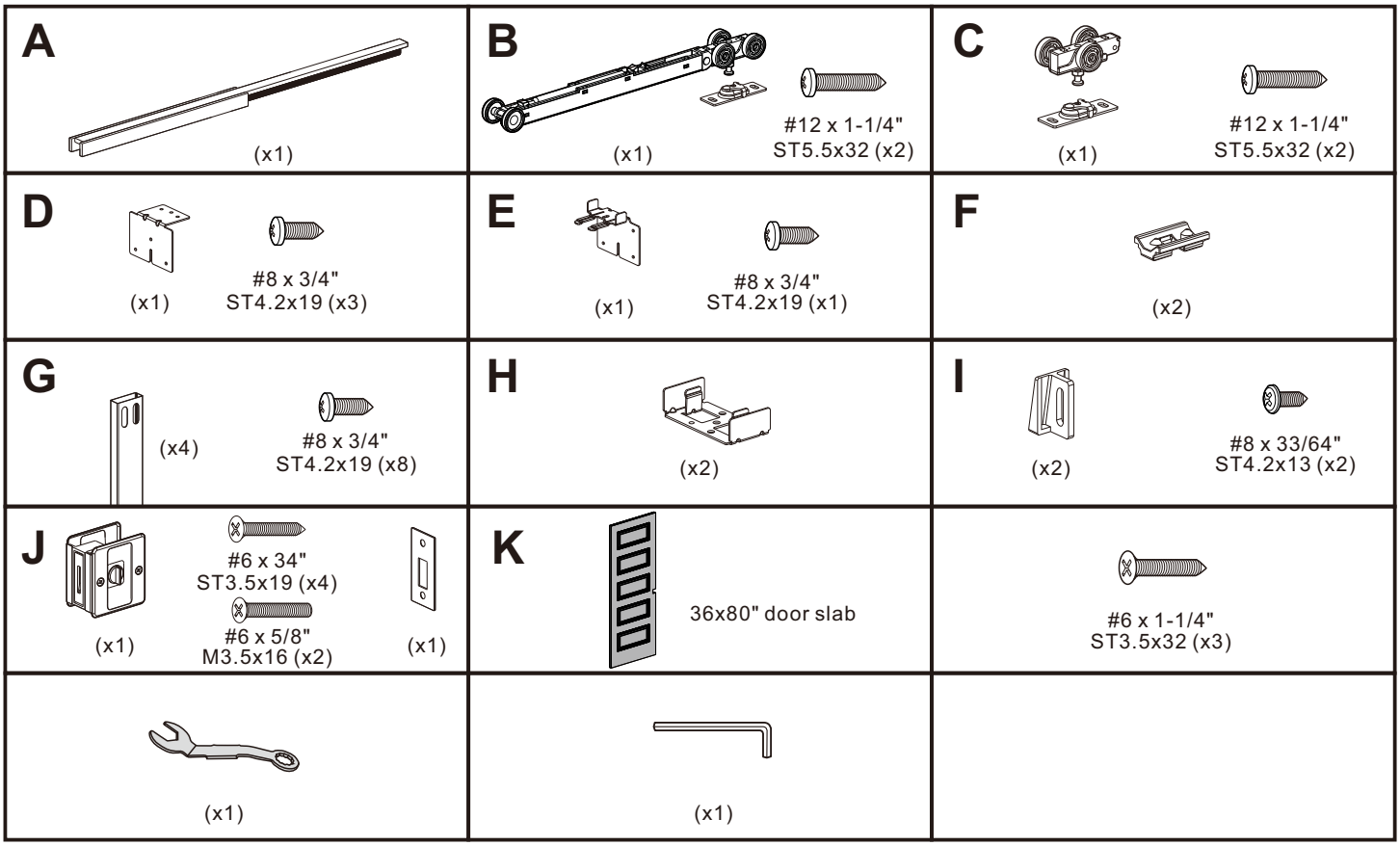


## PREPARE THE ROUGH OPENING

| Height of Rough Opening (Table 1) | | | |
|---|---|---|---|
| Nominal Door Height | Minimum Height of Rough Opening | Bracket Fastener Height from finished floor | Bracket Fastener Height from sub-floor |
| 80" | 84-1/2" | 80-3/4" | 81-1/2" |

| Width of Rough Opening (Table 2) | |
|---|---|
| Nominal Door Width | Width of Rough Opening |
| 24" | 49" |
| 28" | 57" |
| 30" | 61" |
| 32" | 65" |
| 36" | 73" |
| Custom | (2 X Door Width) + 1" |

# Installation

**For 1"(25mm) to 1-3/4"(45mm) doors to 220 lbs.(100 kgs)**

## 1 PREPARE ROUGH OPENING

Plumb the rough studs and ensure the header is square and level.
Minimum Height of ROUGH OPENING = 84-31/64"(2146mm)
Width of ROUGH OPENING = 72-61/64"(1853mm)

Measure up from finished floor **80-3/4"(2051mm)**or from sub-floor to **81-1/2"(2070mm).**
This will give 3/4**"(**19mm**)** to 1**-**1/2**"(**38mm**)** clearance under door**.**
Mark each rough stud and drive hat head nail on center,(not included) leaving 1/8"(3mm) protruding. (Frame header end brackets will rest on these screws).

Snap a chalk line on floor even with side jambs.

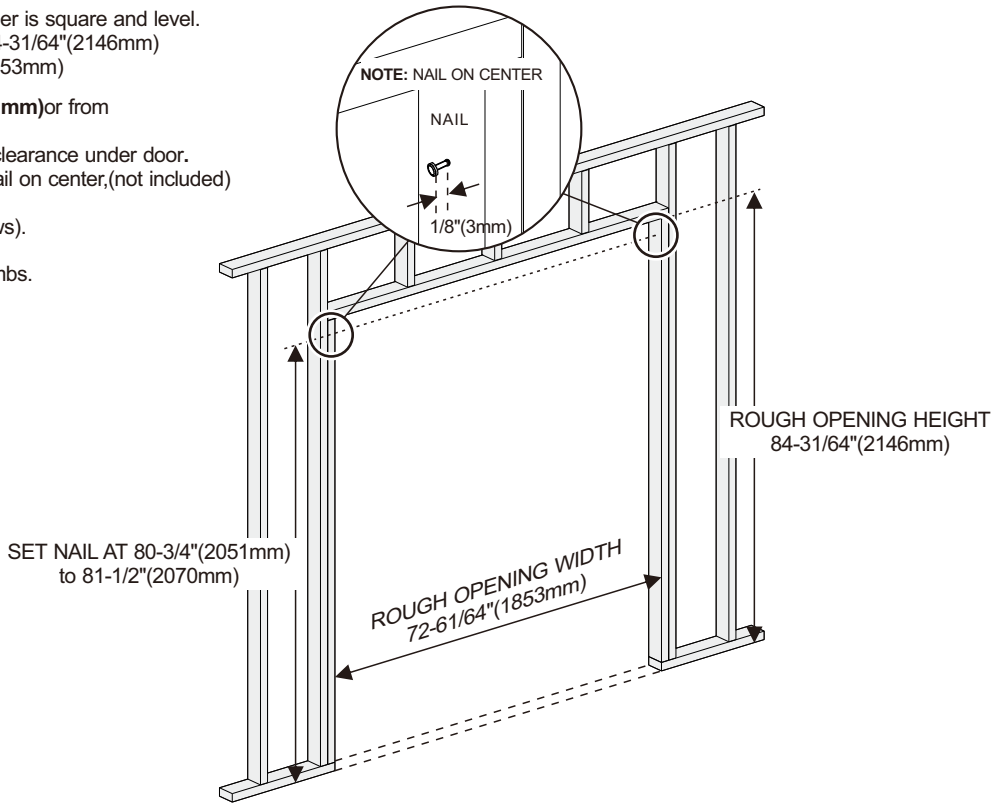


## 2 PREPARE HEADER AND TRACK

**A**



**D**





#8 x 3/4"
ST4.2x19 (x3)

**E**





#8 x 3/4"
ST4.2x19 (x1)

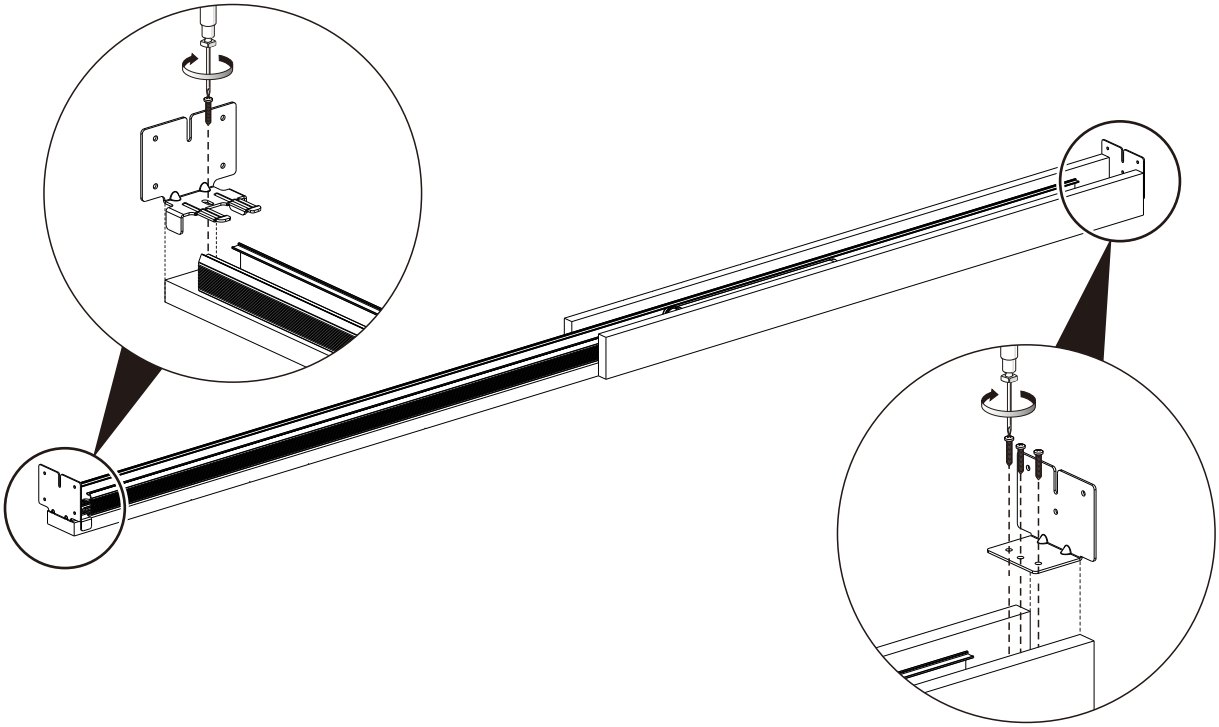

# Installation

## 3

**Slip slots in Frame Header End Plates** over screws in rough studs. Level header.
Set nails and drive nails through remaining holes in end plates.(not included)

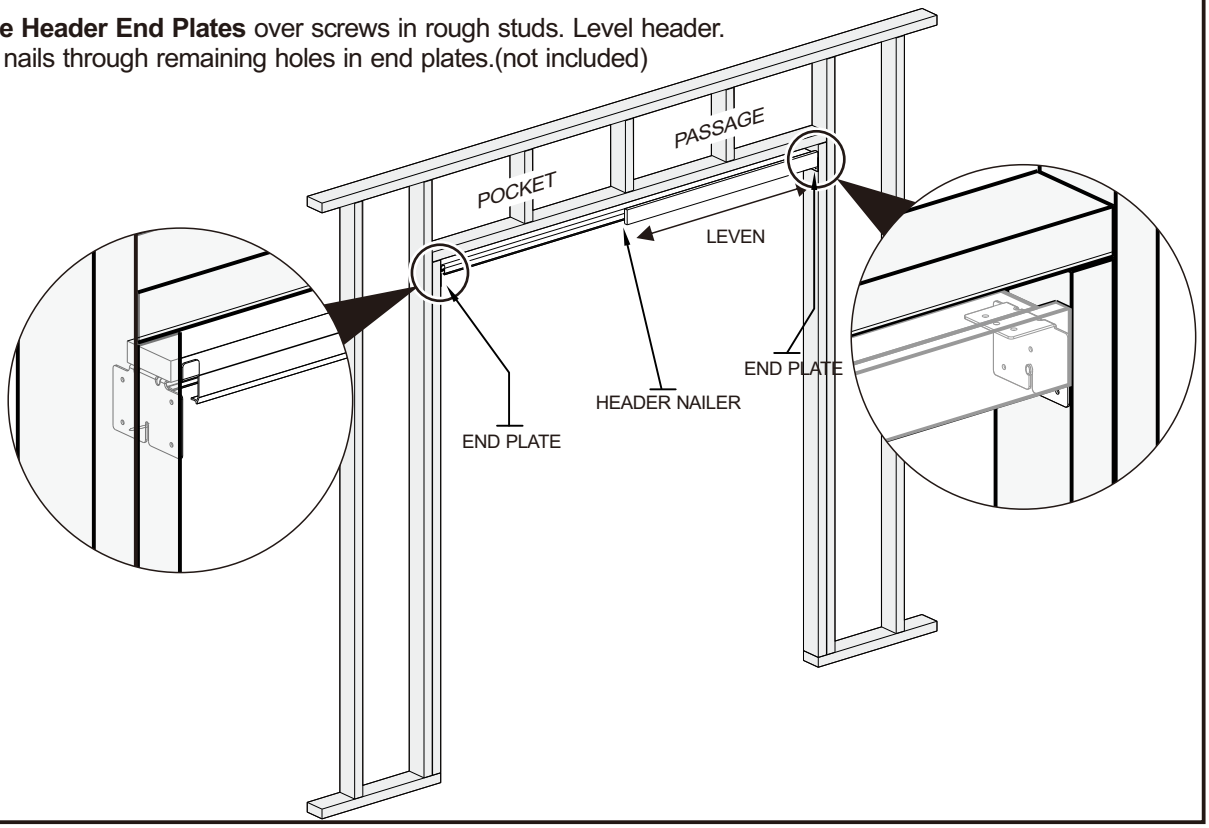


## 4 INSTALL THE SPLIT TUBES

**G**

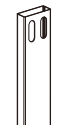



#8 x 3/4"
ST4.2x19 (x8)

**H**



1. Slip fingers of Floor Plate into Split Steel Tube as shown.
2. Butt two Split Steel Tube against header nailer and screw into place with two #8x3/4"(4.2x19mm) Pan Head Screws.. Attach other Split Steel Tube midway in "Pocket" opening.
3. Plumb Split Steel Tube between chalk lines and nail to floor. (On masonry, use industrial adhesive or Tapcon fasteners.)

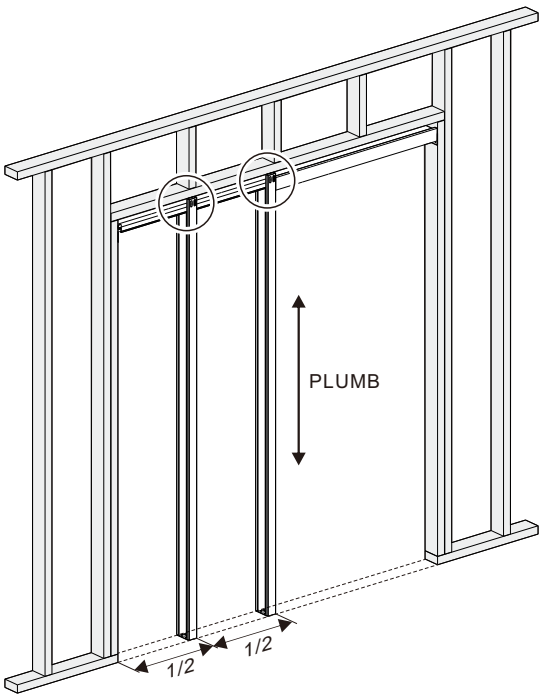


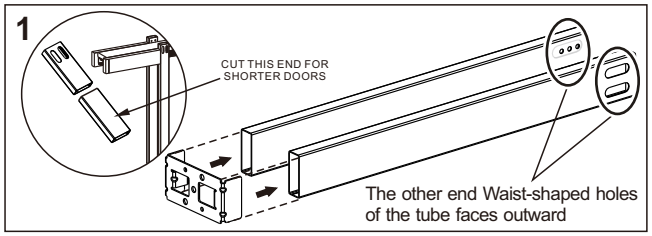


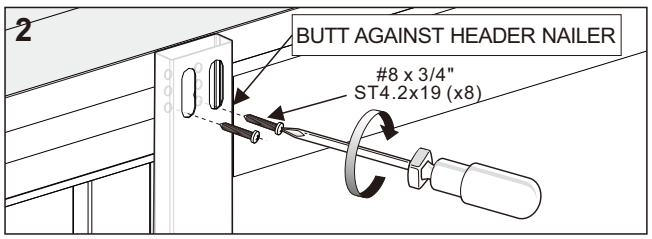


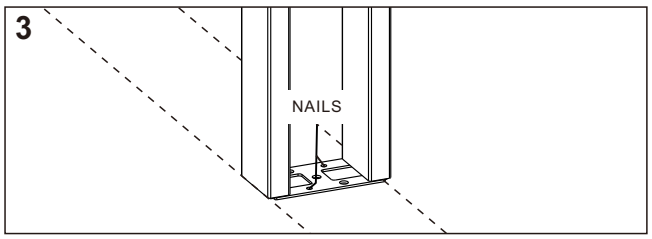

# Installation

## 5 INSTALL SOFT CLOSE ACTUATOR

F



(x1)

**Place the 1st soft close actuator/trigger** into the track and have it 12" (305mm) far from the edge of the first split steel tube (close to door opening). Tighten it to the track.

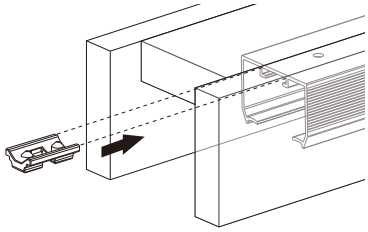

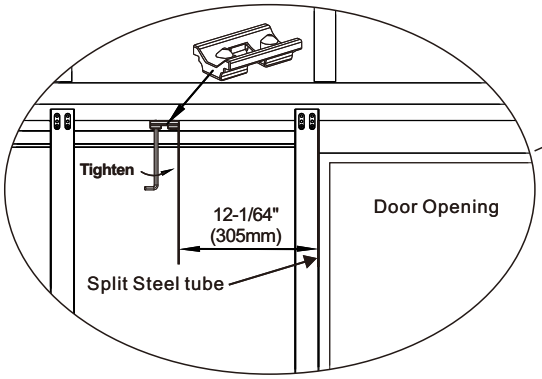


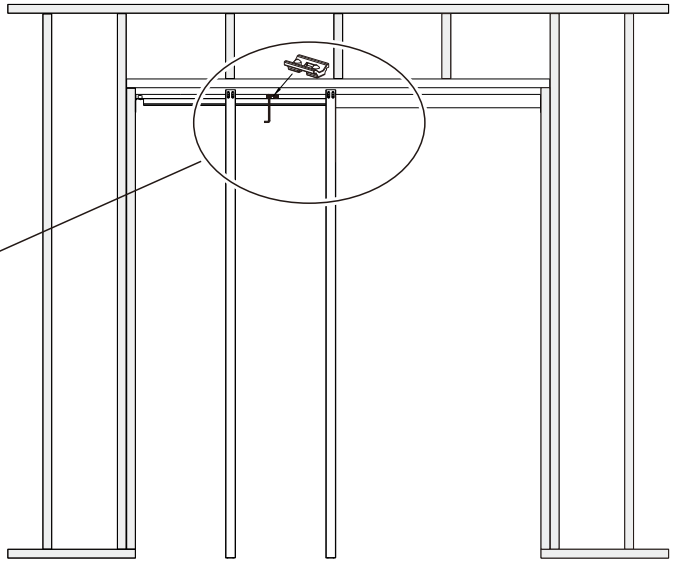

## 6 INSTALL HANGER WITHOUT SOFT CLOSE

C



(x1)

INSERT Ball Bearing Hanger Wheel assembly into Track.

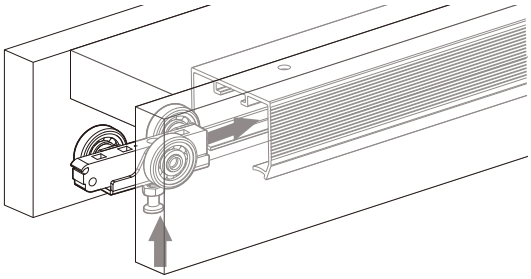

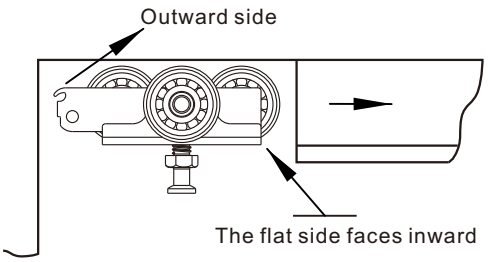


## 7 ENGAGE SOFT CLOSE DAMPENER

B



(x1)

Pushing Soft Close Dampener trigger toward "engaged" positions on both side. **Important** : Dampener must be **engaged**, or soft close will not work. If installed incorrectly, Soft Close Dampener may be **damaged** and door will have to be removed, and the installation of Soft Close will have to restart again.

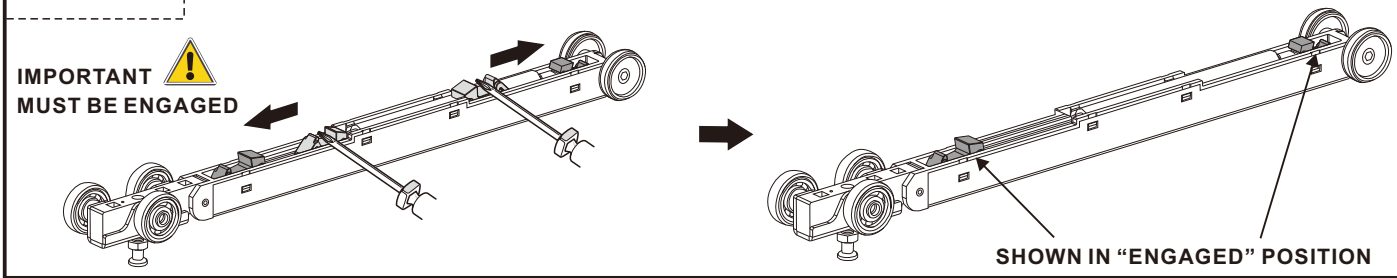

# Installation

## 8 INSTALL SOFT CLOSE HANGER

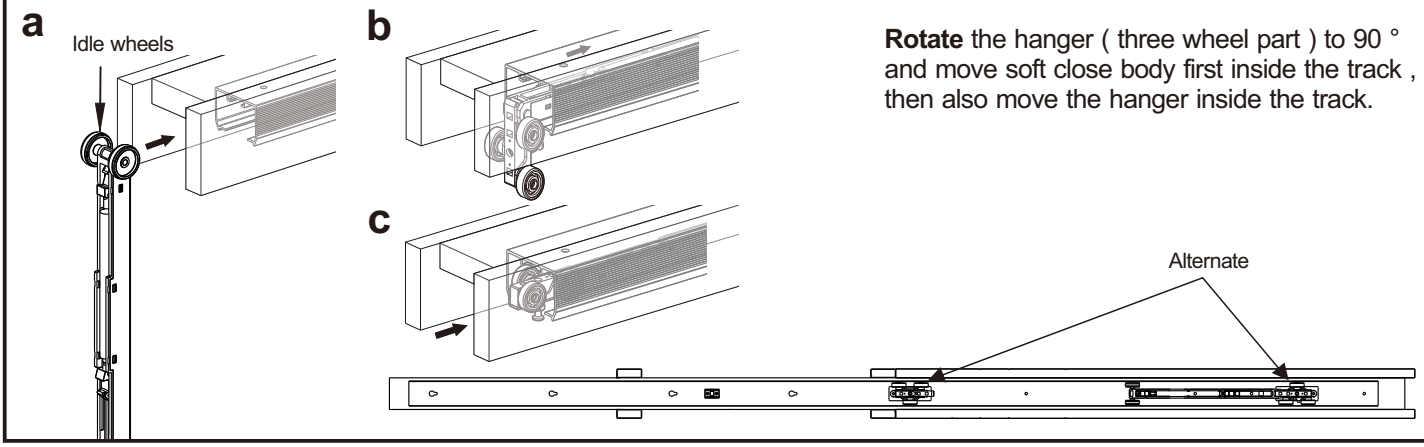


**Rotate** the hanger ( three wheel part ) to 90 ° and move soft close body first inside the track , then also move the hanger inside the track.

## 9 INSTALL SOFT CLOSE ACTUATOR

**F**



(x1)

**Place the 2nd soft close actuator/trigger** into the track and have it 9-11/64"**(**233mm**)** from the end plates.
Tighten it to the track.

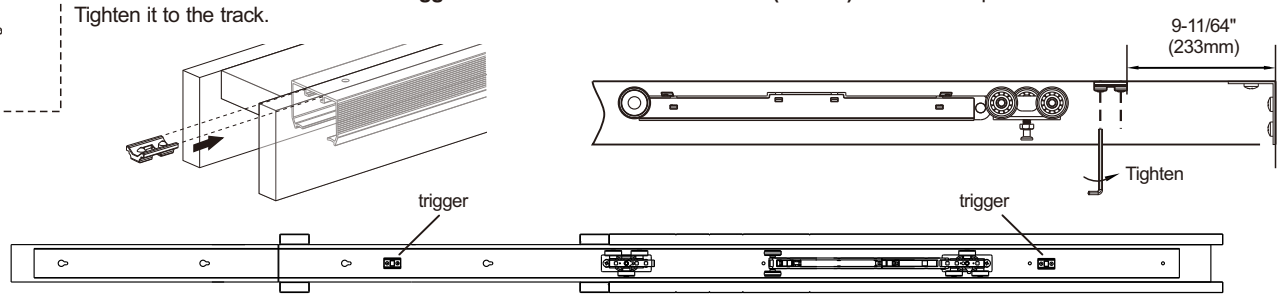


## 10 INSTALL SOFT CLOSE ACTUATOR

**B/C**



(x2)

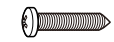

#12 x 1-1/4"
ST5.5x32 (x4)

**AB/Attach** door plates on top of door 2-3/4"(70mm) from each edge with lock tabs on the same side.
**CD/Mount** door by locating door plate under adjusting bolt of hanger. Lift door and push bolt into door plate, then click the tab in place.
Repeat with other hanger/door plate.

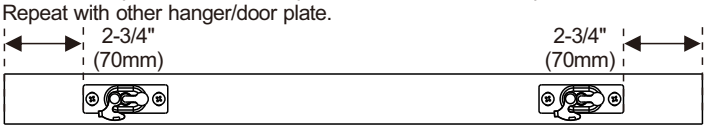


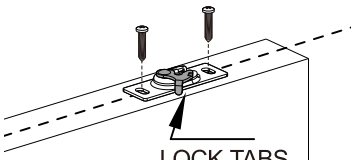


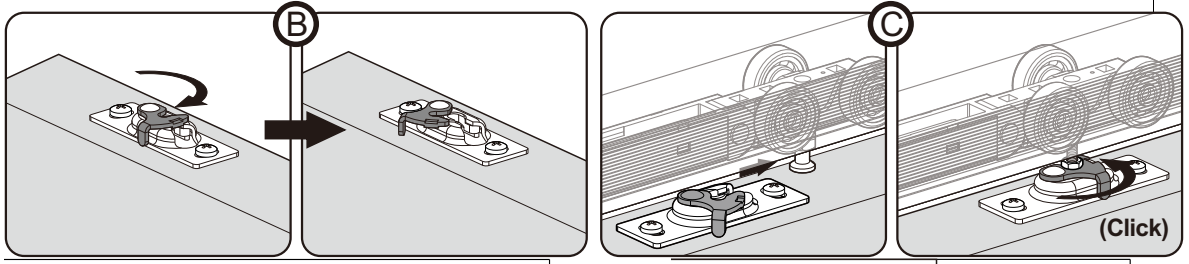


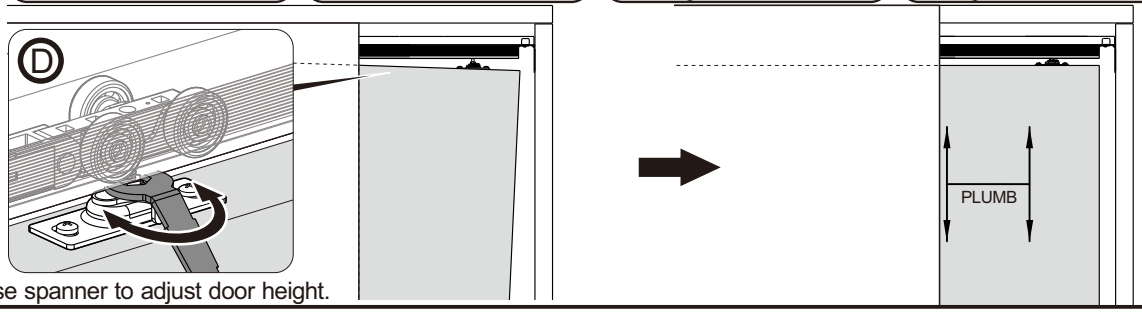


Use spanner to adjust door height.

# Installation

## 11 FINISH THE JAMBS AND TRIM

Fasten split header on lock lever side with screws for future door removal or adjustment. Install the finish trim or casing. Make sure to fasten the finish header trim to **ONLY** the wall and **NOT** the finish split header. This ensures the finish split header can be removed later without damage.

NOTE: Leave minimum 3/16"(5mm) clearance between jamb and door.

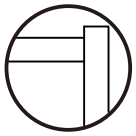

YES

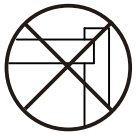

NO

***a***

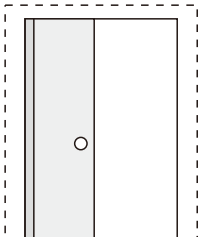

ATTACH FINISH SPLIT JAMB TO STEEL TUBE/ PLUMB DOOR WITH JAMB

***b***

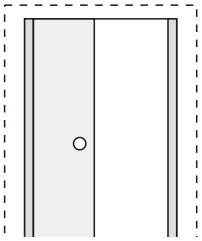

SHIM AND PLUMB FINISH JAMB WITH DOOR

***c***

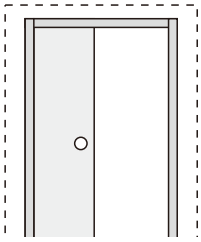

FINISH SPLIT HEADER

***d***

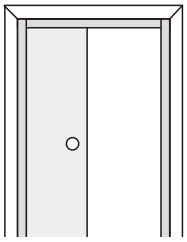

FINISH TRIM

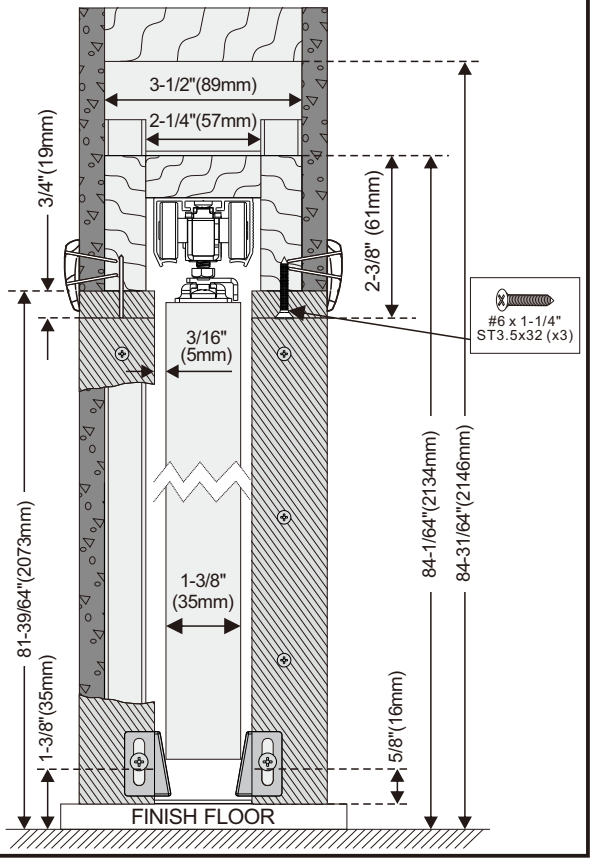


## 12 INSTALL DOOR GUIDE

I



(x2)



#8 x 33/64"
ST4.2x13 (x2)

**Fasten** Guides on finished split jambs at door bottom so door is held in center of opening.

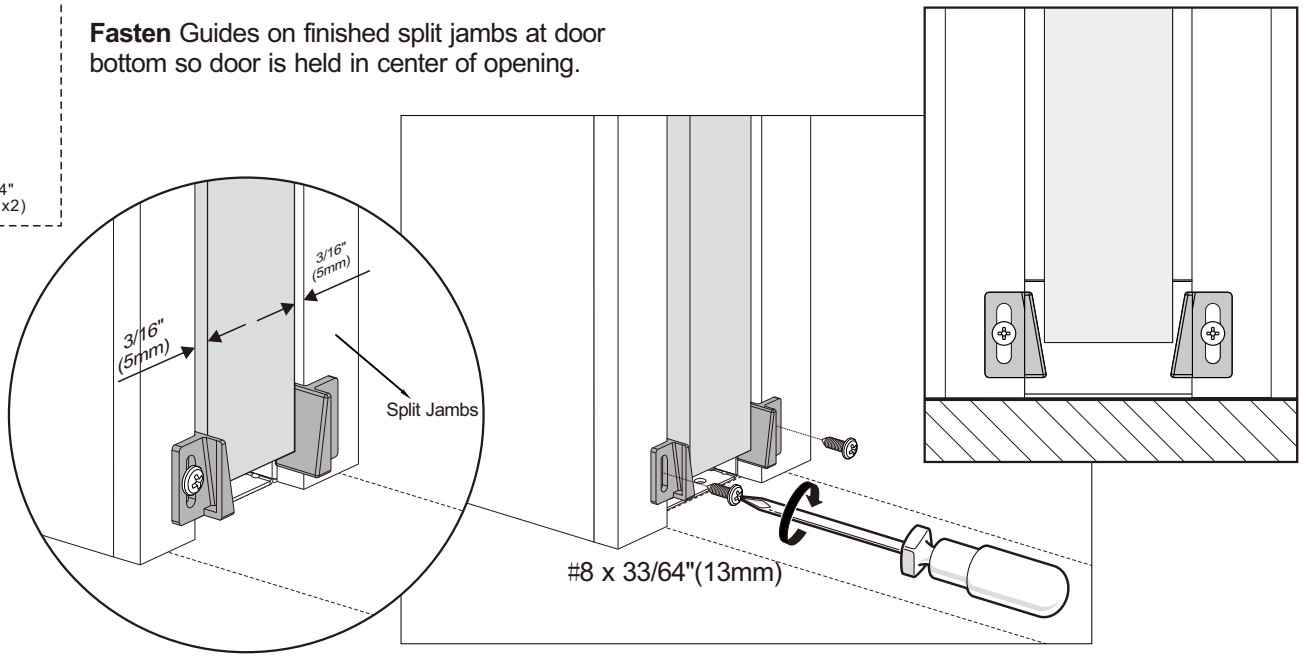

# Installation

**This lock is assembled for doors sliding open right to left from locking side.**
**For doors opening left to right from locking side, see instructions below for reversing plates.**

## 13 Install pocket door privacy knob

A



(x2)
#6 x 5/8"
M3.5x16 (x2)

B



(x2)
#6 x 34"
ST3.5x19 (x2)

Fasten machine screws (A)# on both sides and adjust for door thickness. Then insert wood screws (B) and tighten.

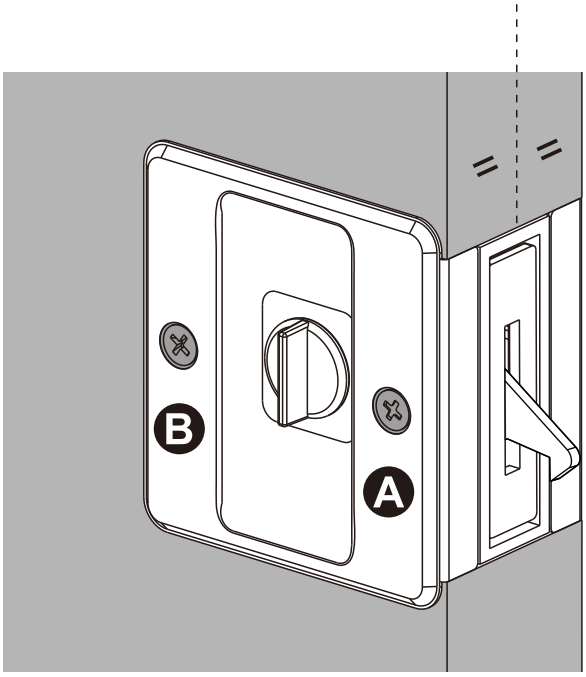


## 14

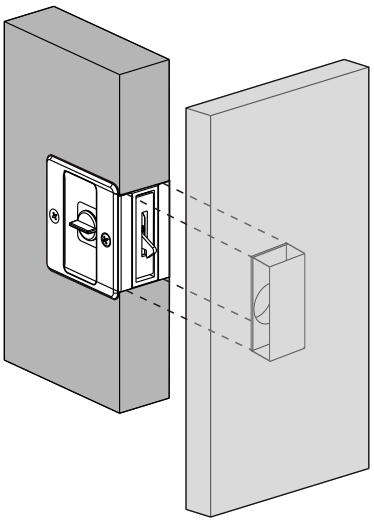

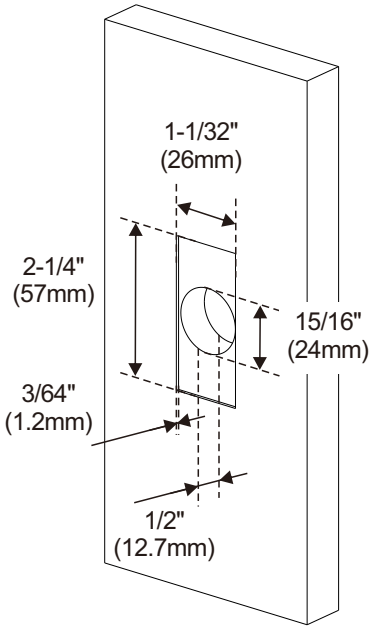

# Installation

## 15

(A) Mark horizontal centerline on jamb, the center of strike corresponds to the center of lock body.
(B) Mark vertical centerline. Close door and rotate turnbuttom to locate mark on jamb surface.
(C) Center strike within indicated lines and marked jamb surface.
(D) Mortise and make the strike fits flush in jamb.

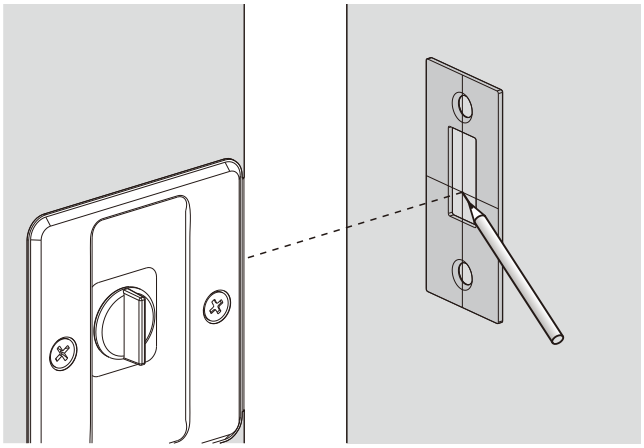

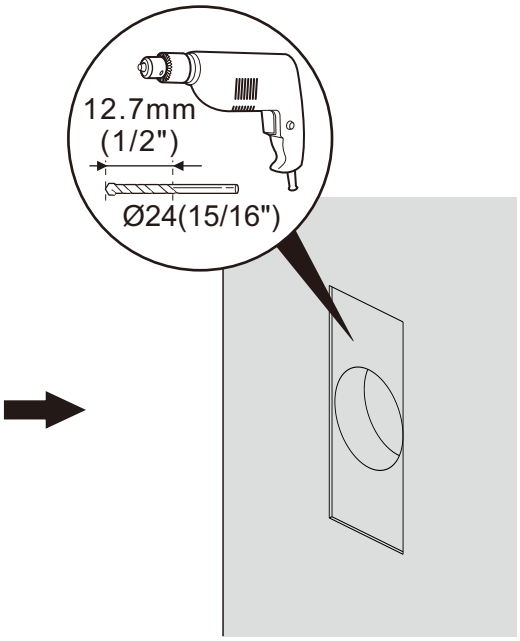


## 16



(x1)



#6 x 34"
ST3.5x19 (x2)

Drill a 24mm (15/16") diameter hole in the center of mortise area and 12.7mm (1/2") deep. Screw strike plate into position using flat head wood screws.

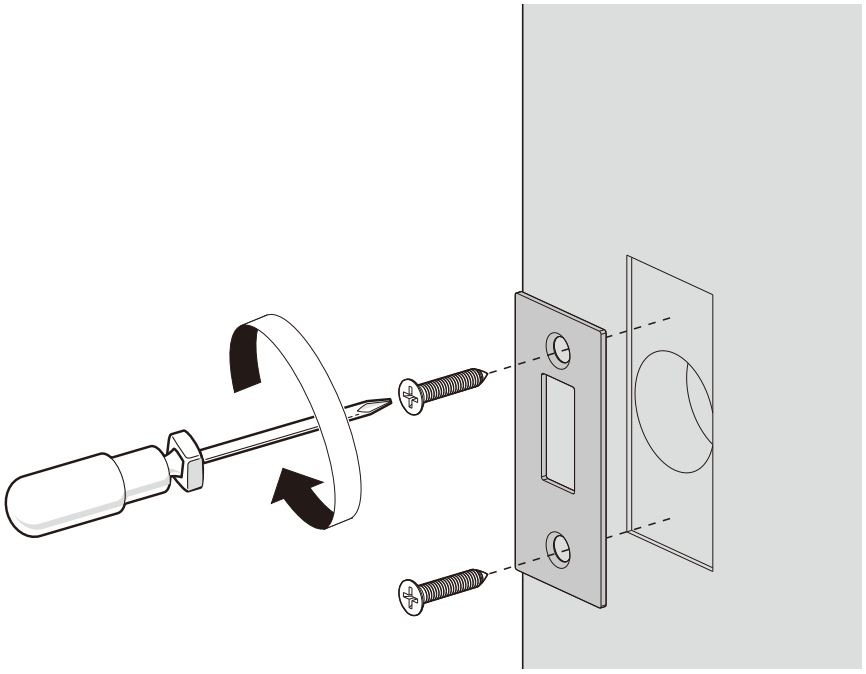

# Installation

**TO ASSEMBLE AFTER REVERSING PLATES**

**To reverse outside plates on lock assembly:**
**1.Remove machine screw on both side.**
**2.Change plates from side to side and make sure fork arm engages rocker pin.**
**3.Then re-assemble.**

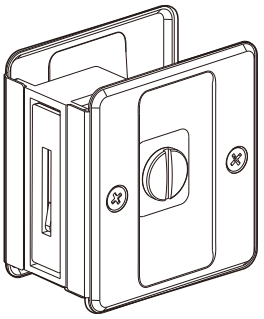

**Before changing plates**

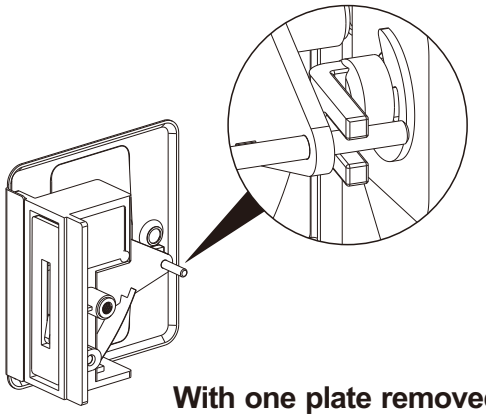

**With one plate removed**
**Be sure fork arm engages rocker pin when reversing plates**

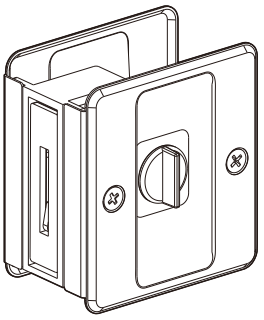

**After changing plates**