Assembly Instruction

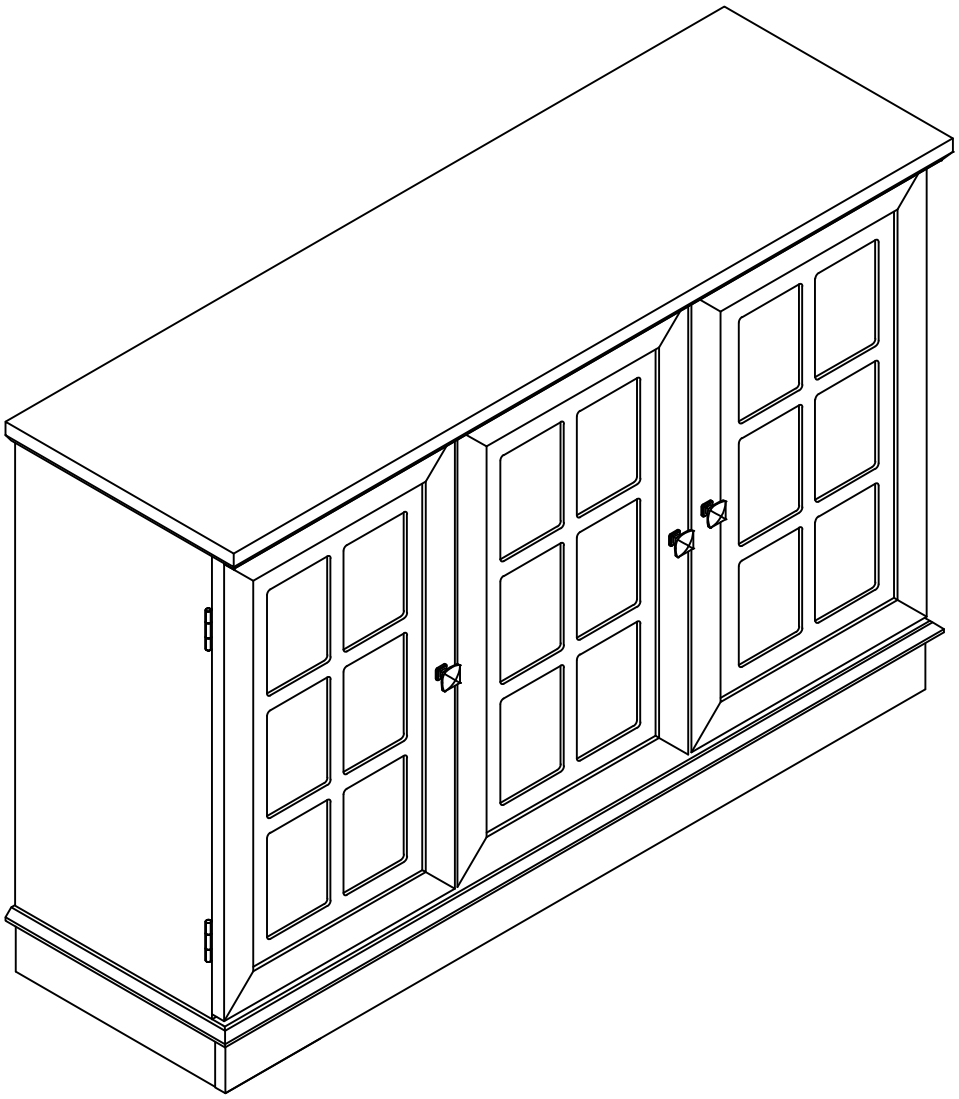

MADE IN CHINA

ASSEMBLY INSTRUCTION

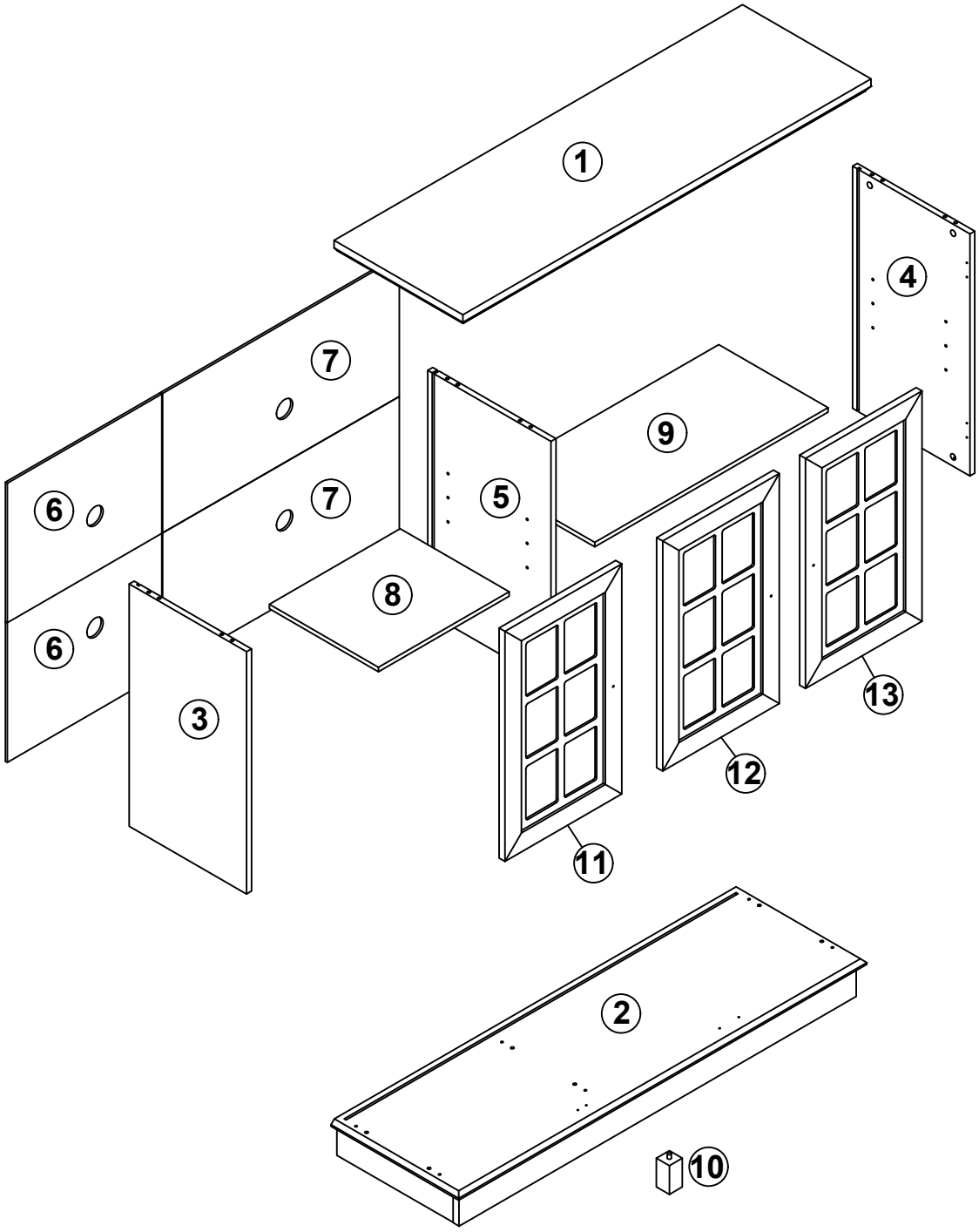

MADE IN CHINA

HARDWARE

A x 12+2spare	B x 12+2spare	C x 12+2spare	D x 36+2spare
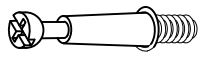	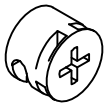	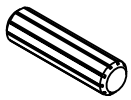	
Ø6 x 32mm	Ø15 x 10mm	Ø8*30mm	Ø3.5*14mm

E x 20+2spare	F x 3	G x 3	H x 2
	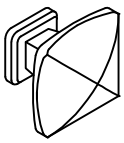	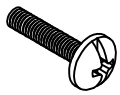	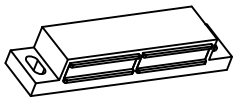
Ø3*18mm	31 *31mm	M4*22mm	71*15*12mm

I x 12+1spare	J x 8+1spare	K x 14	L x 2
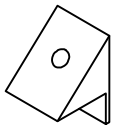	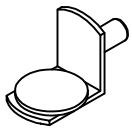		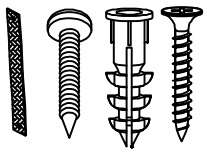
		Ø20mm	

M x 4	N x 2	O x 2
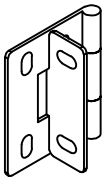	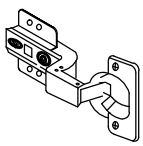	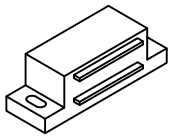
		45*14*14mm

ASSEMBLY INSTRUCTION

Installation of Cams and Pins

Screw the pin into the hole. To set the cams correctly, ensure that the arrow on the cam is opening to the hole of the pin it is locking. Lock the cam by turning the cam head with a screwdriver until it is tightened. Please do not use an electric screwdriver to assemble the unit.

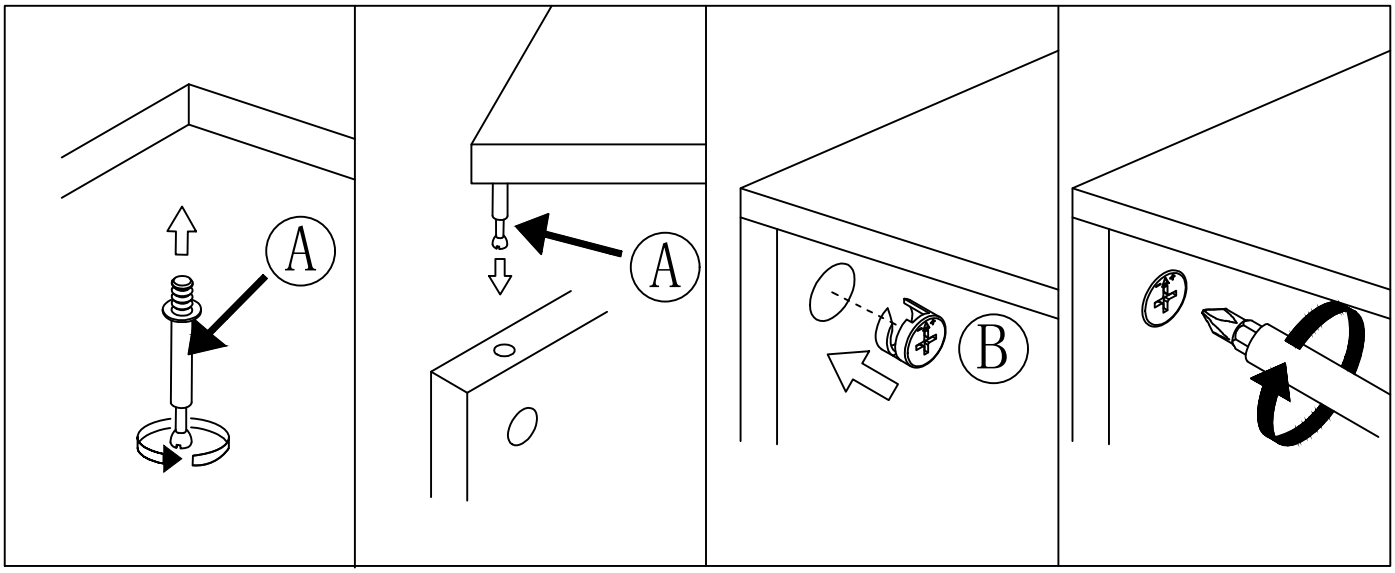

Read each step carefully before starting. It is very important that each step of instruction is performed in the correct order. If these steps are not followed in sequence, assembly difficulties will occur.

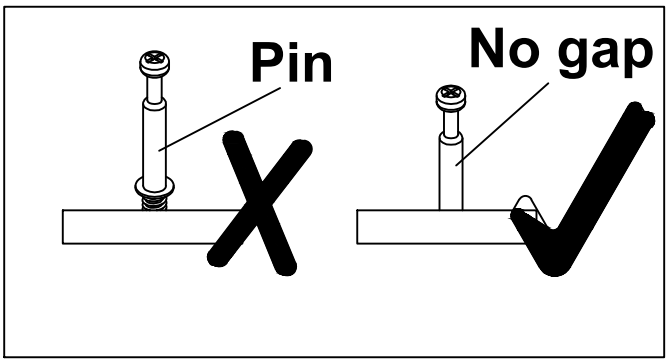

HING ADJUSTMENT GUIDE

It may be necessary to adjust the hinges so that the doors align. Use the instructions below as a guide.

ⓐ

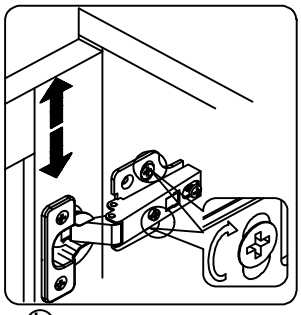

Up and Down Adjustment
To adjust the door vertically loosen the screw as shown and move up and down as needed.

ⓑ

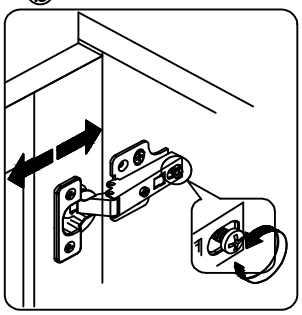

Front and Back Adjustment
To adjust the gap from the door to the main frame turn the screw clockwise or anti-clockwise as needed.

ⓒ

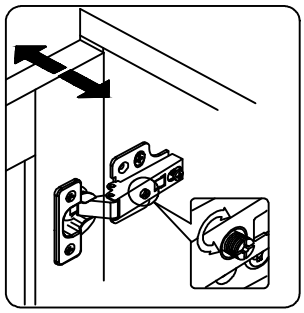

Left and Right Adjustment
To adjust the door laterally adjust the screw as shown by turning clockwise or anti-clockwise.

ⓓ

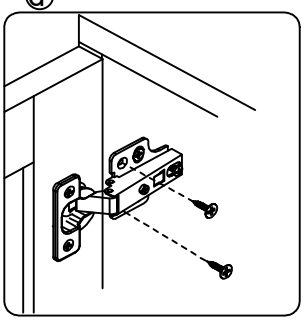

Please fix other screws.

MADE IN CHINA

ASSEMBLY INSTRUCTION

STEP 1

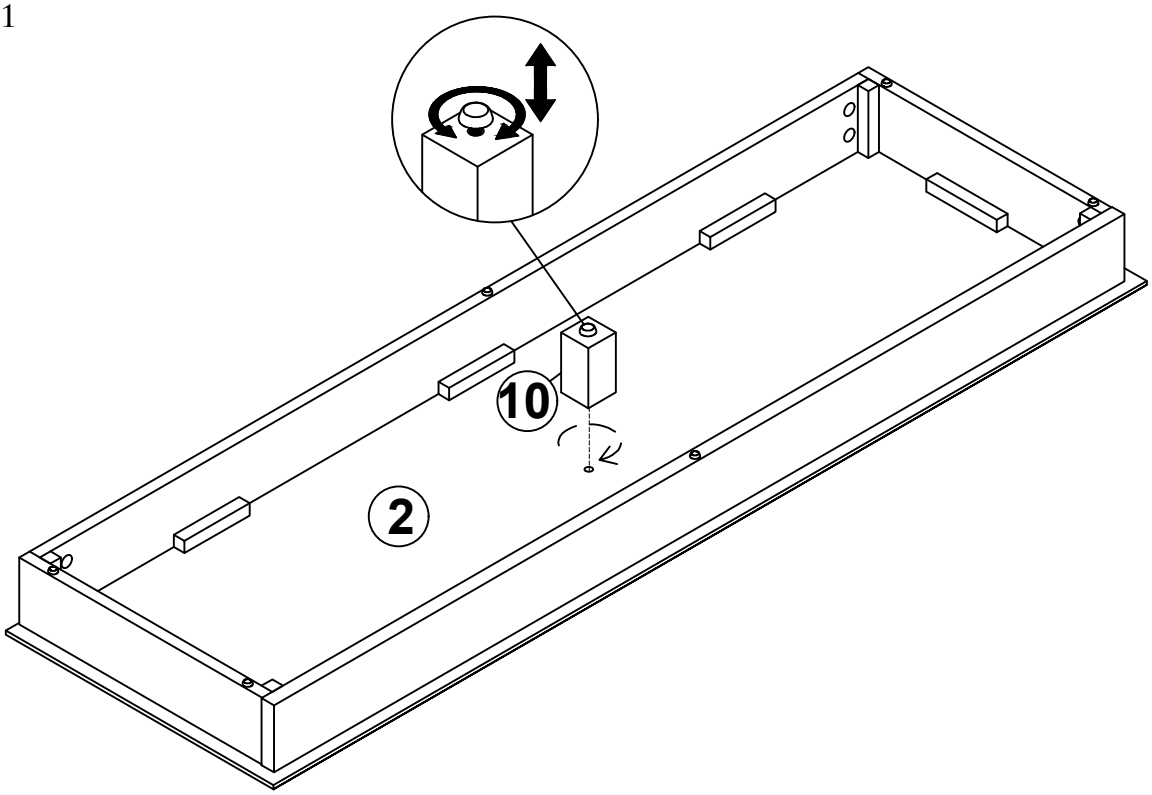

STEP 2

A:	6PCS
E:	4PCS
H:	1PCS
O:	1PCS

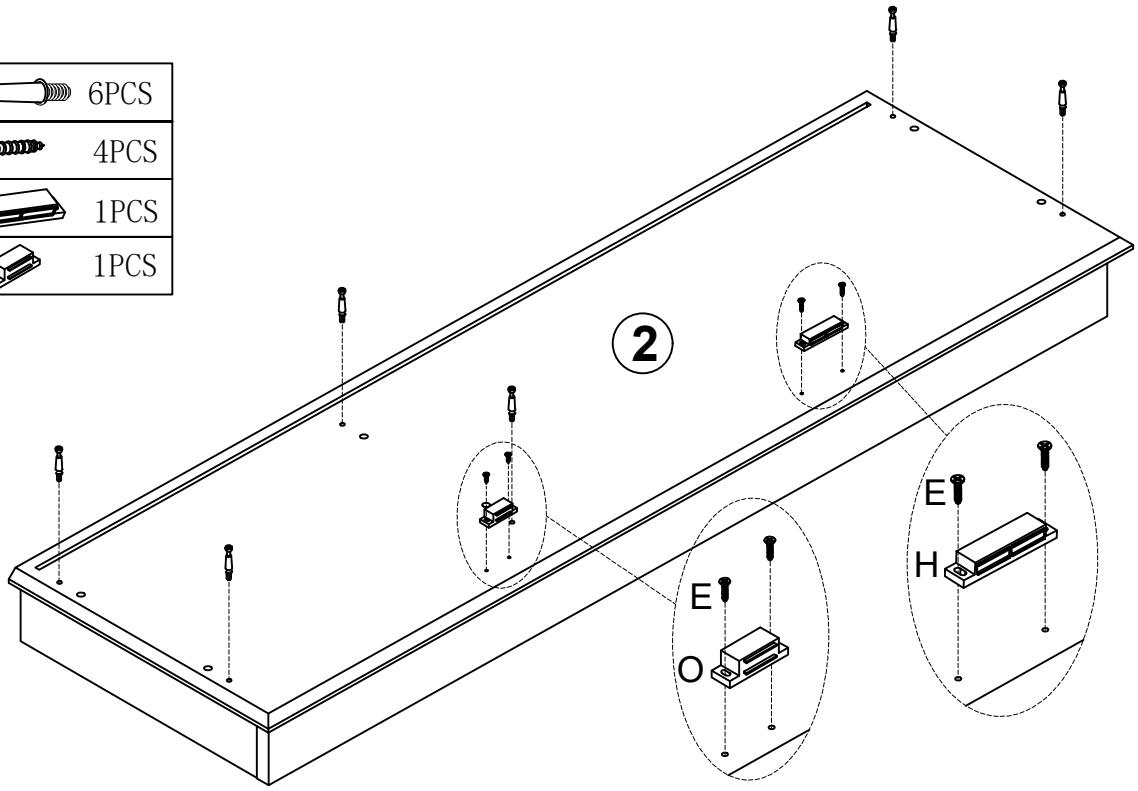

MADE IN CHINA

ASSEMBLY INSTRUCTION

STEP 3

B:		6PCS
C:		6PCS

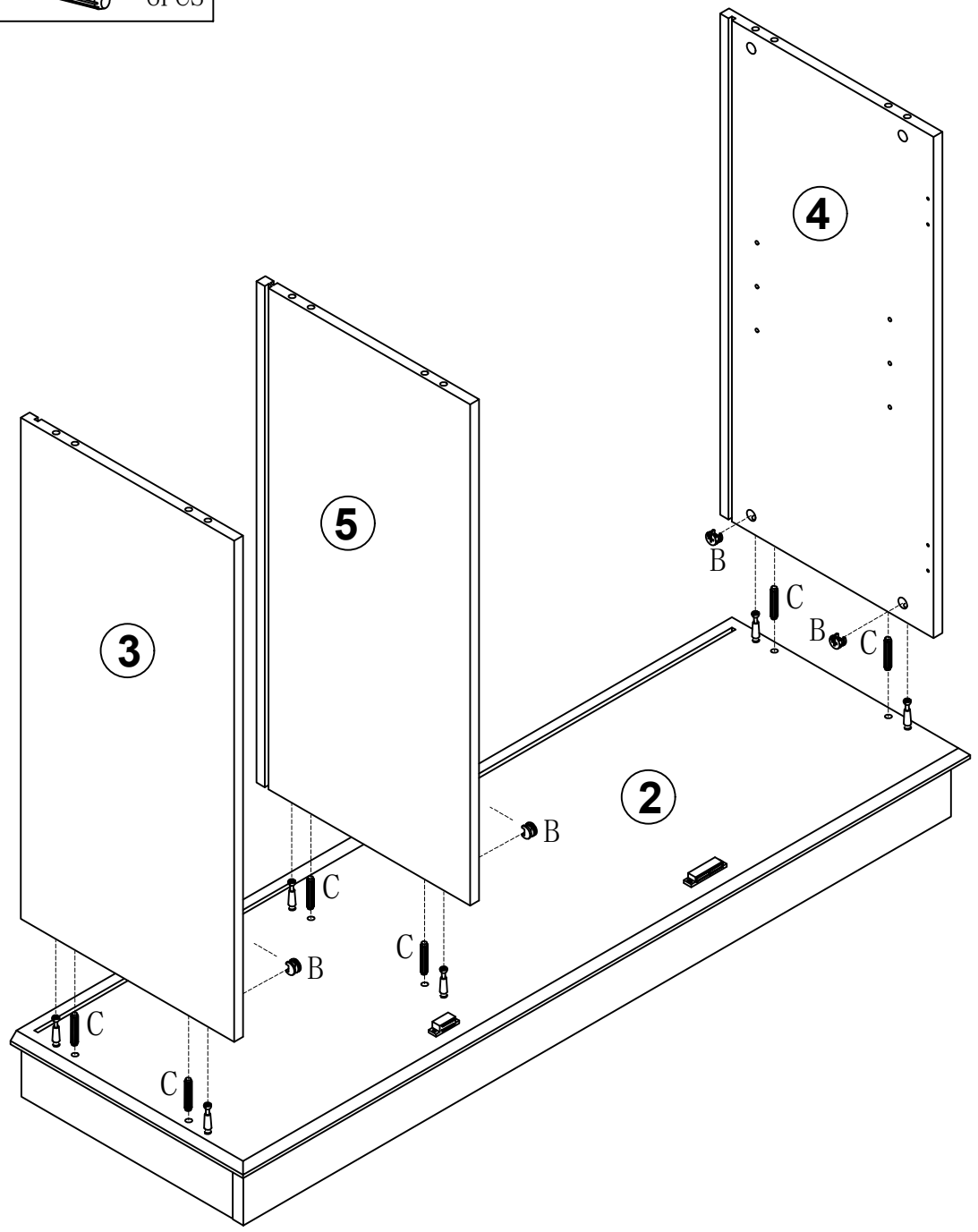

ASSEMBLY INSTRUCTION

STEP 4

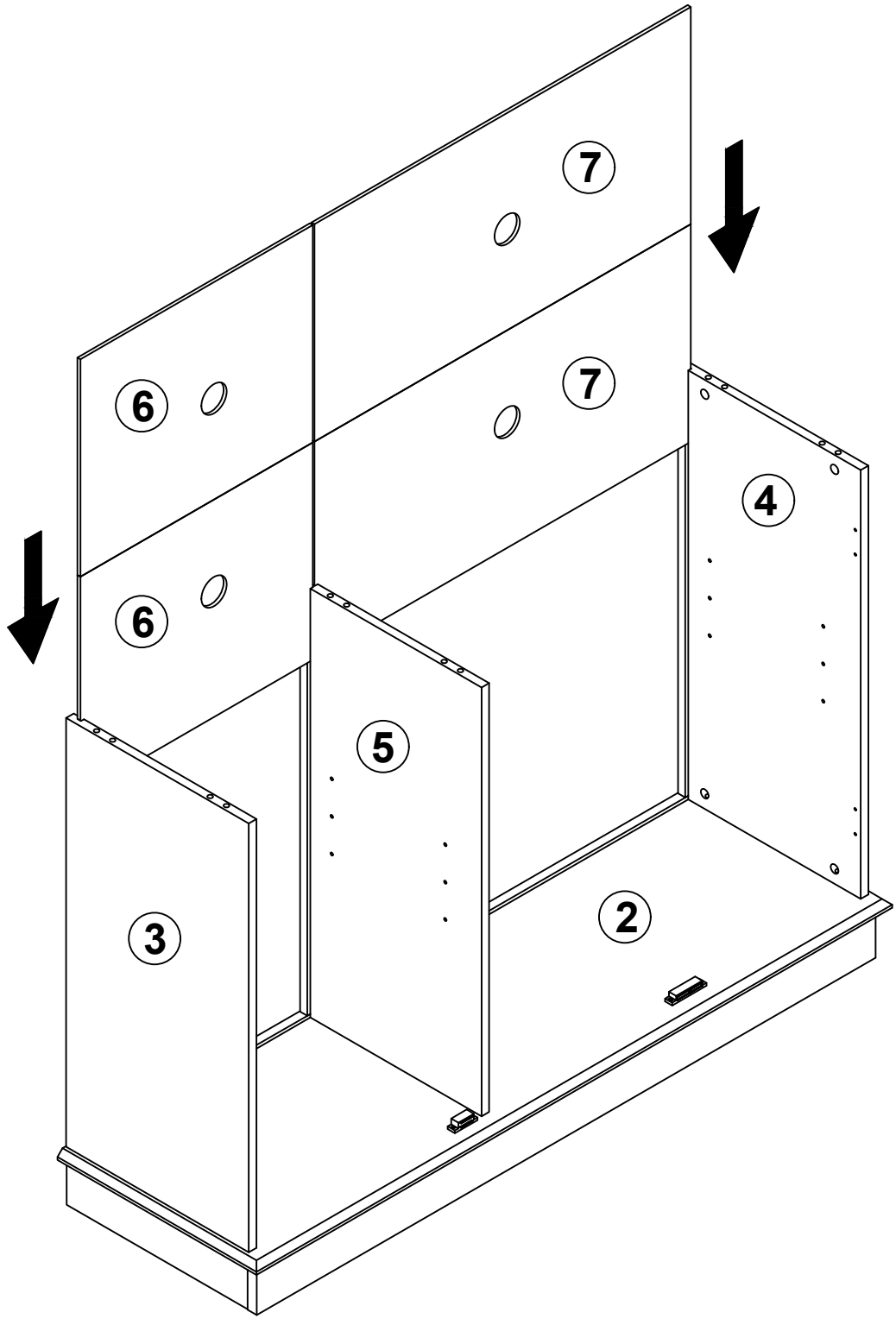

ASSEMBLY INSTRUCTION

STEP 5

A: 	6PCS
E:	4PCS
H: 	1PCS
O: 	1PCS

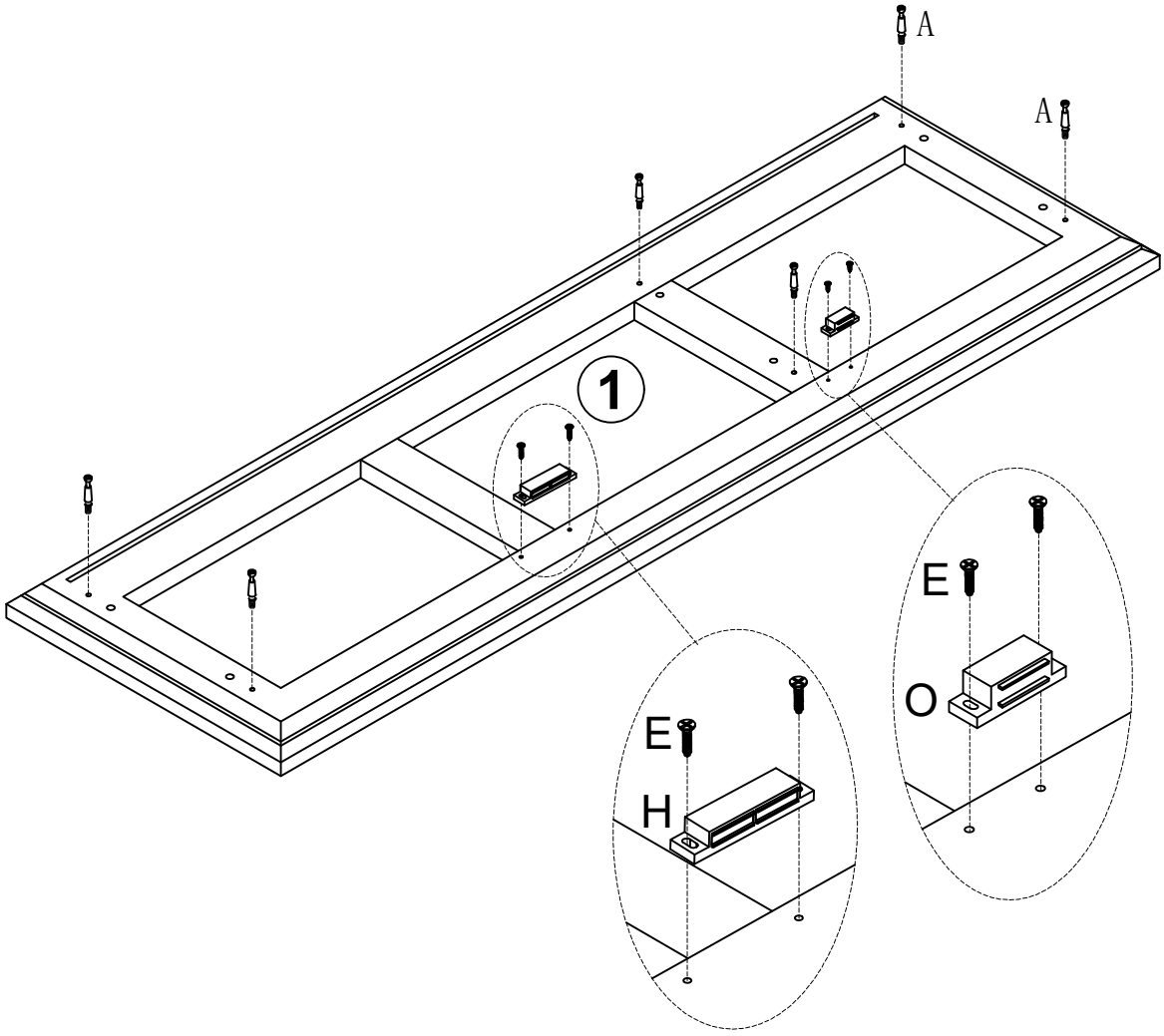

MADE IN CHINA

ASSEMBLY INSTRUCTION

STEP 6

B:		6PCS
C:		6PCS

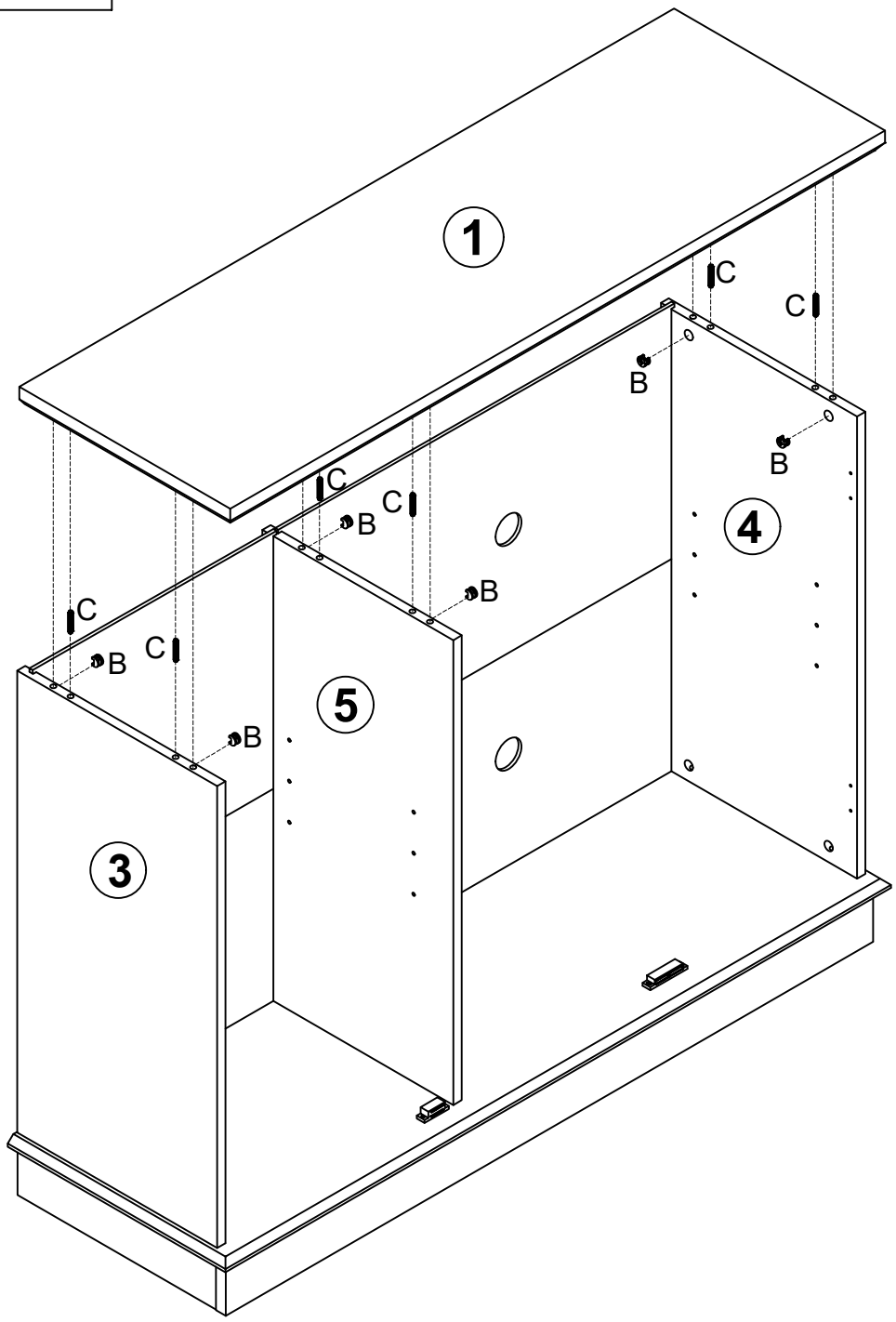

ASSEMBLY INSTRUCTION

STEP 7

K: 14PCS

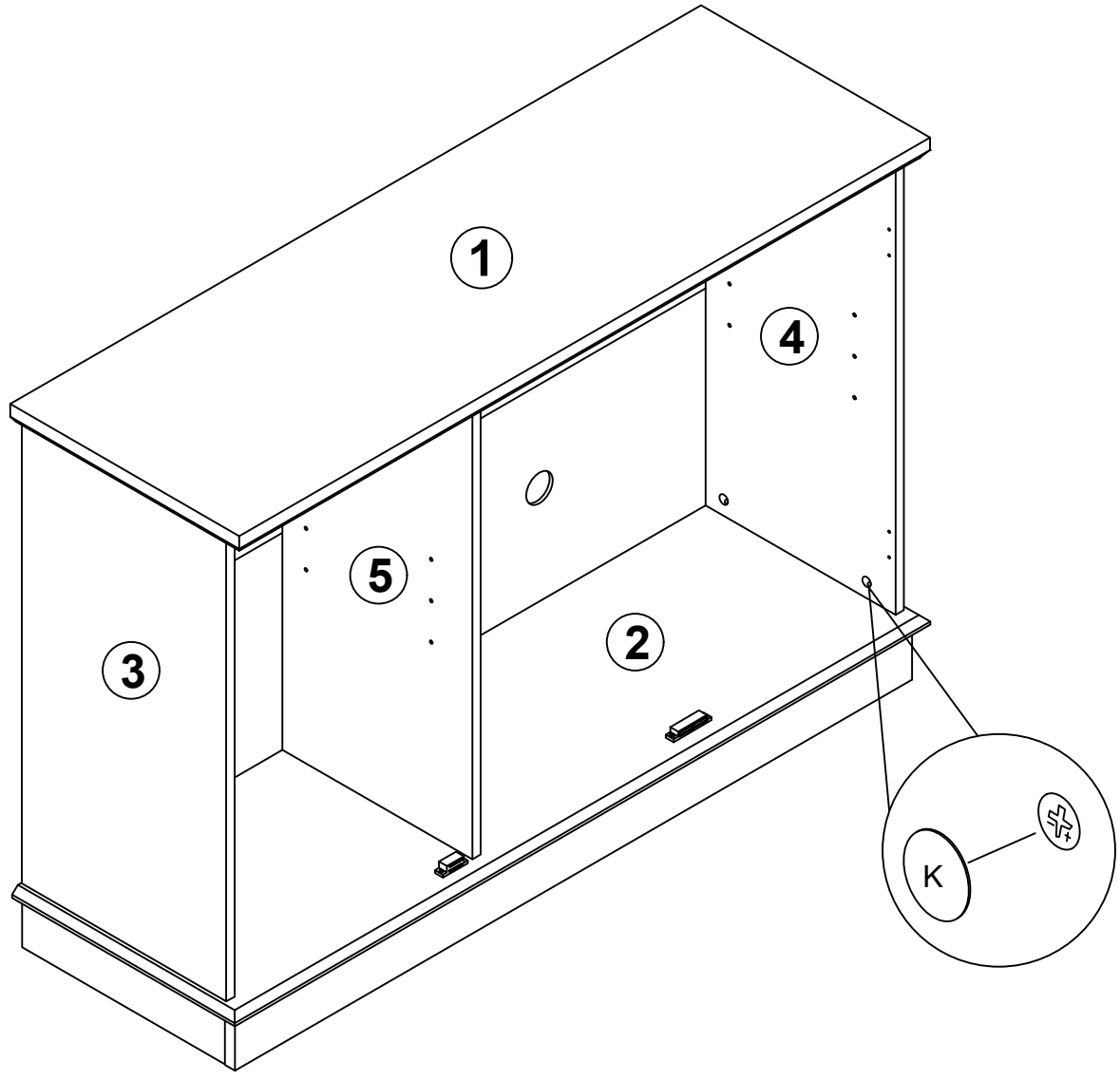

ASSEMBLY INSTRUCTION

STEP 8

M:		4PCS
D:		8PCS

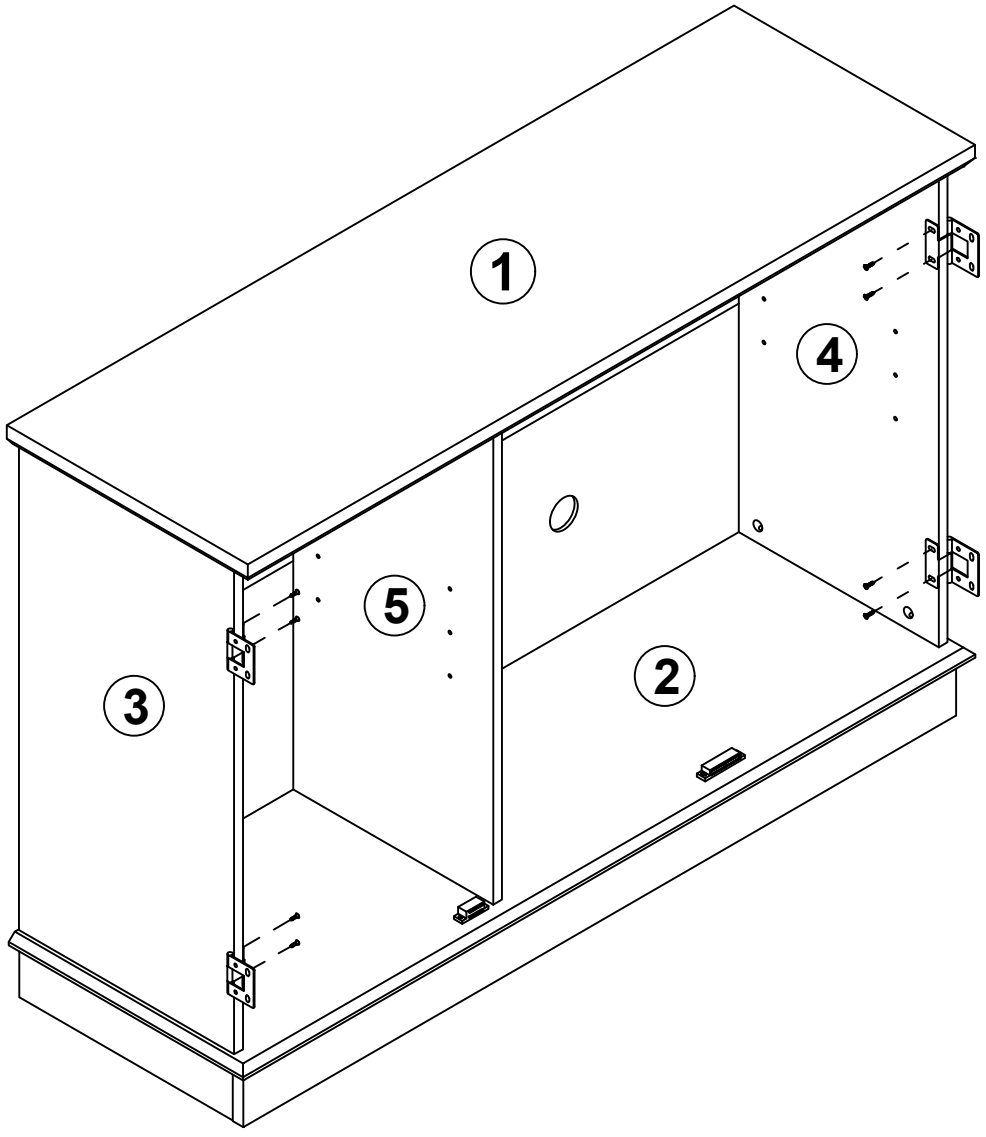

ASSEMBLY INSTRUCTION

STEP 9

J: 8PCS

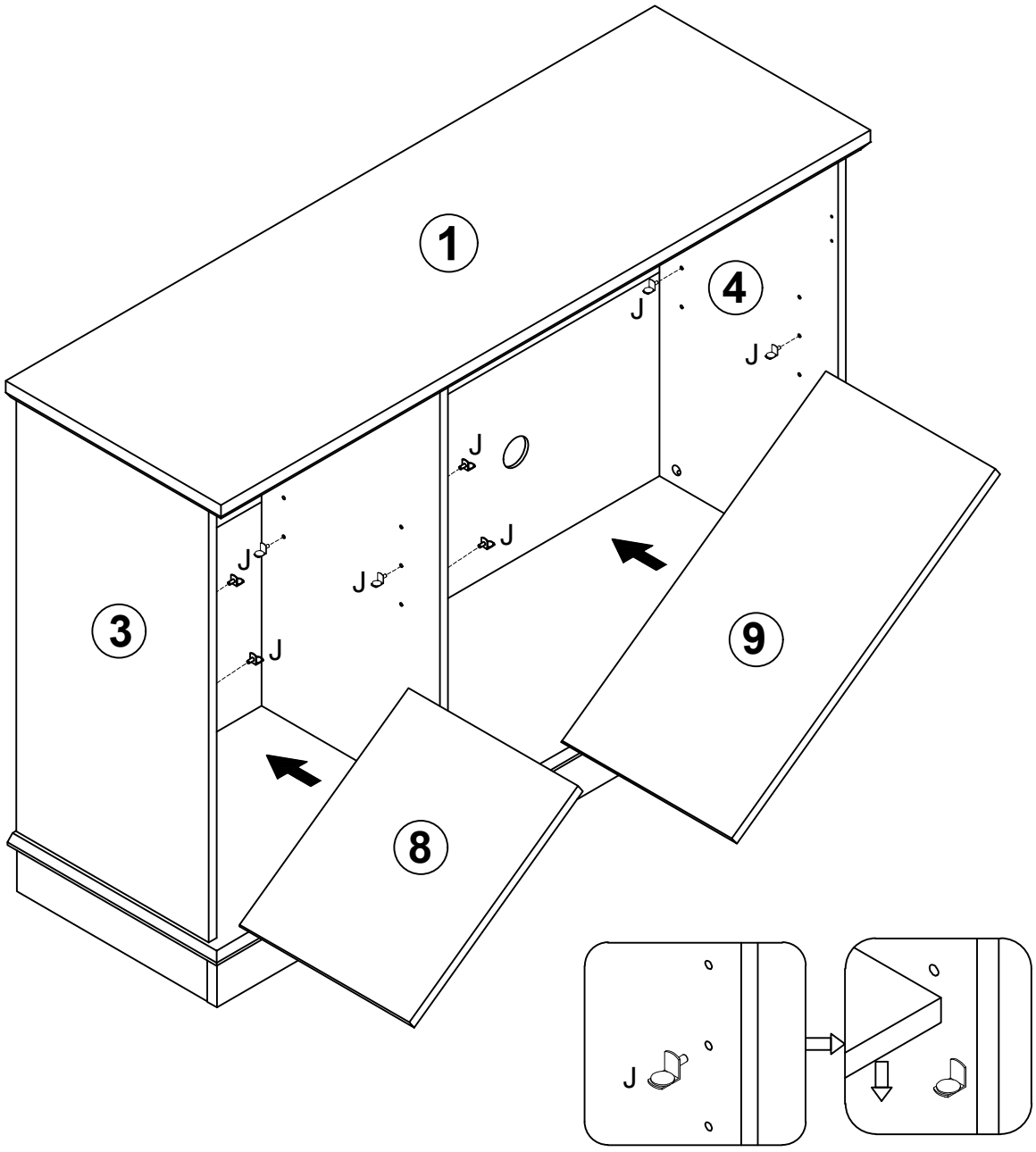

ASSEMBLY INSTRUCTION

STEP 10

N:		2PCS
D:		4PCS

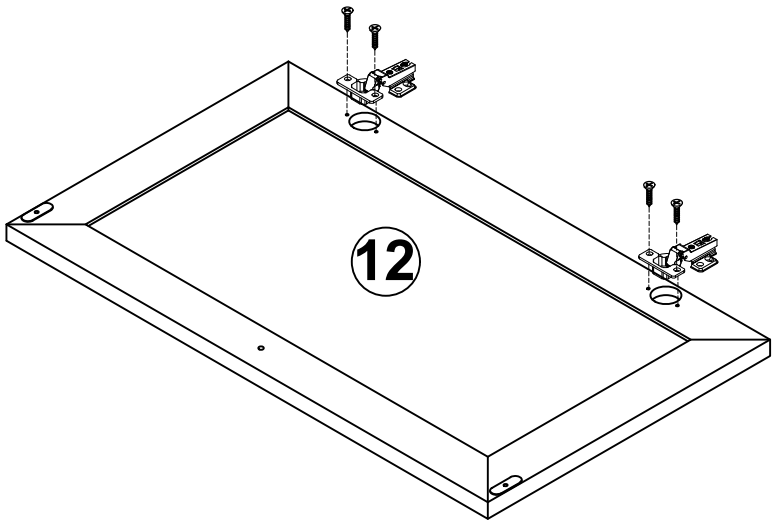

ASSEMBLY INSTRUCTION

STEP 11

F:		3PCS
G:		3PCS

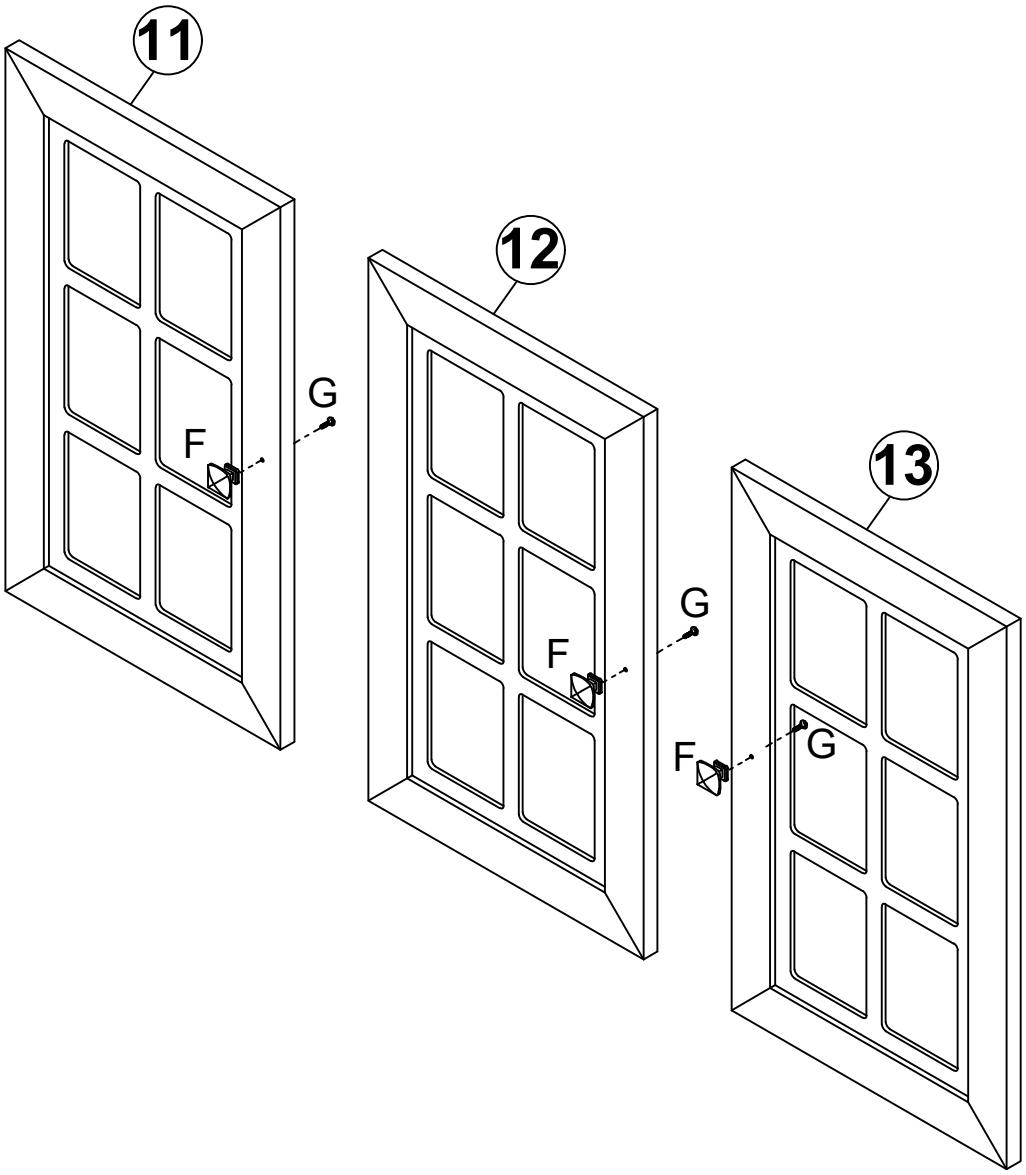

ASSEMBLY INSTRUCTION

STEP 12

D: 24PCS

After installing the doors and hinges, if you find that the gap between the two doors or between the door and the frame is too large or too small, you can adjust the size of the gap by slightly adjusting the screws of the hinges.

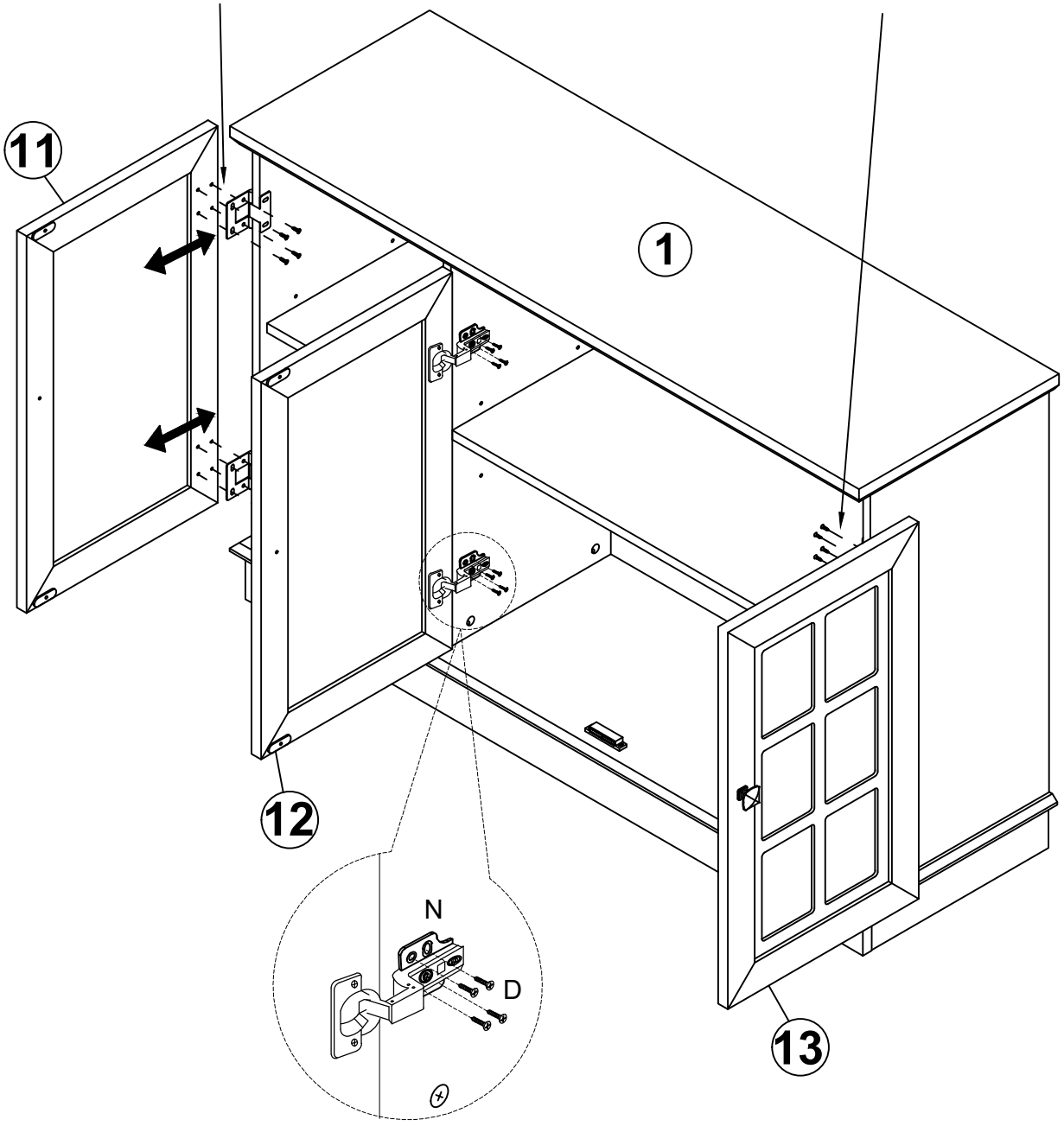

ASSEMBLY INSTRUCTION

STEP 13

E:		12PCS
I:		12PCS

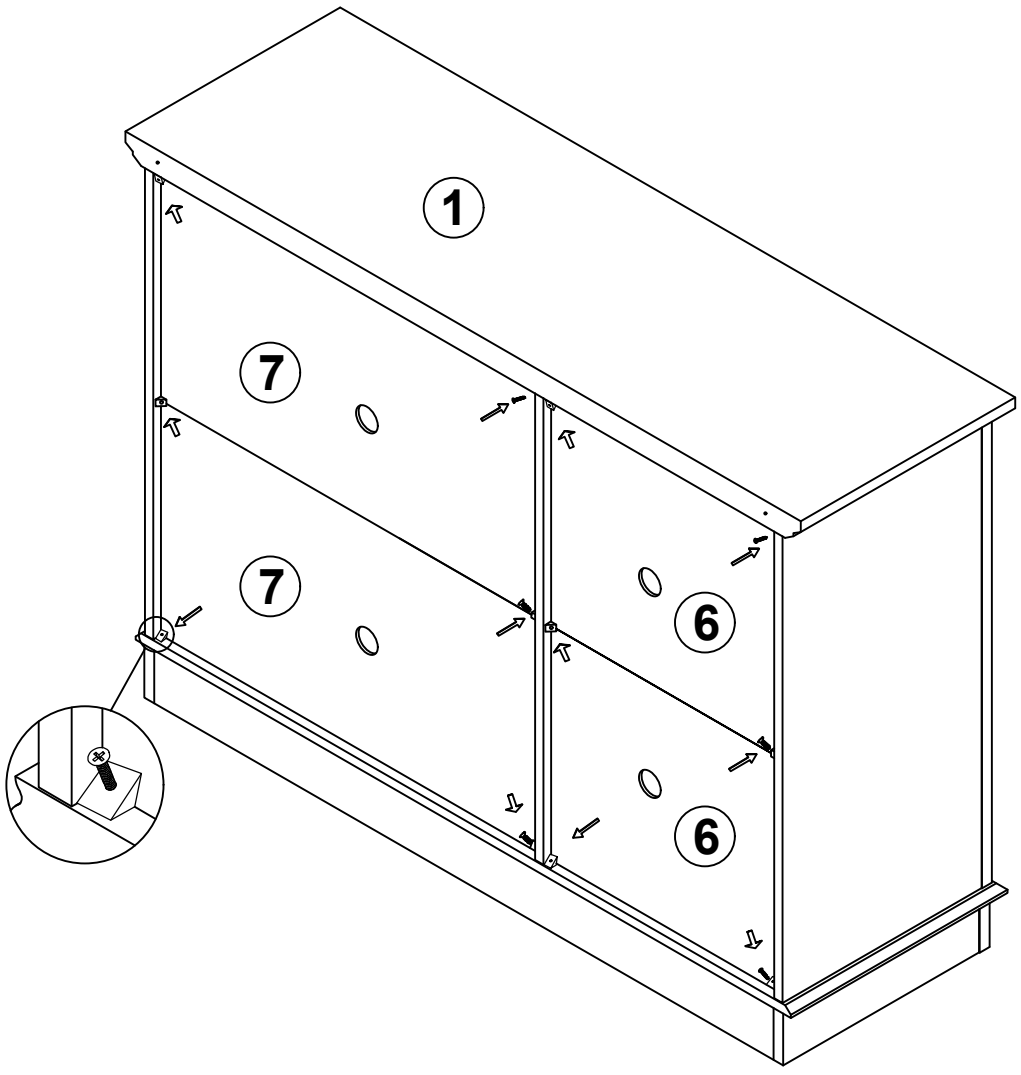

ASSEMBLY INSTRUCTION

STEP 14

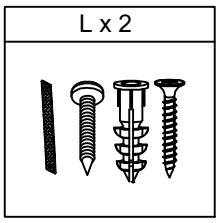

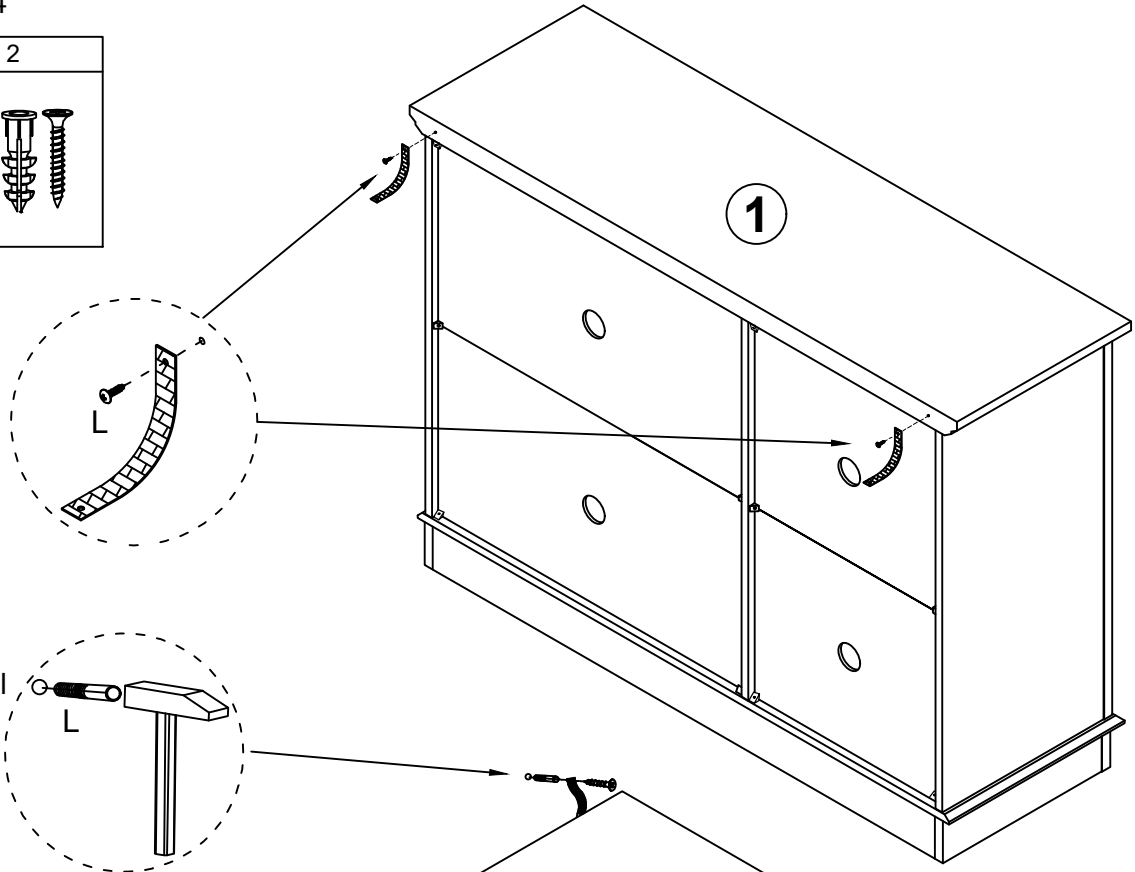

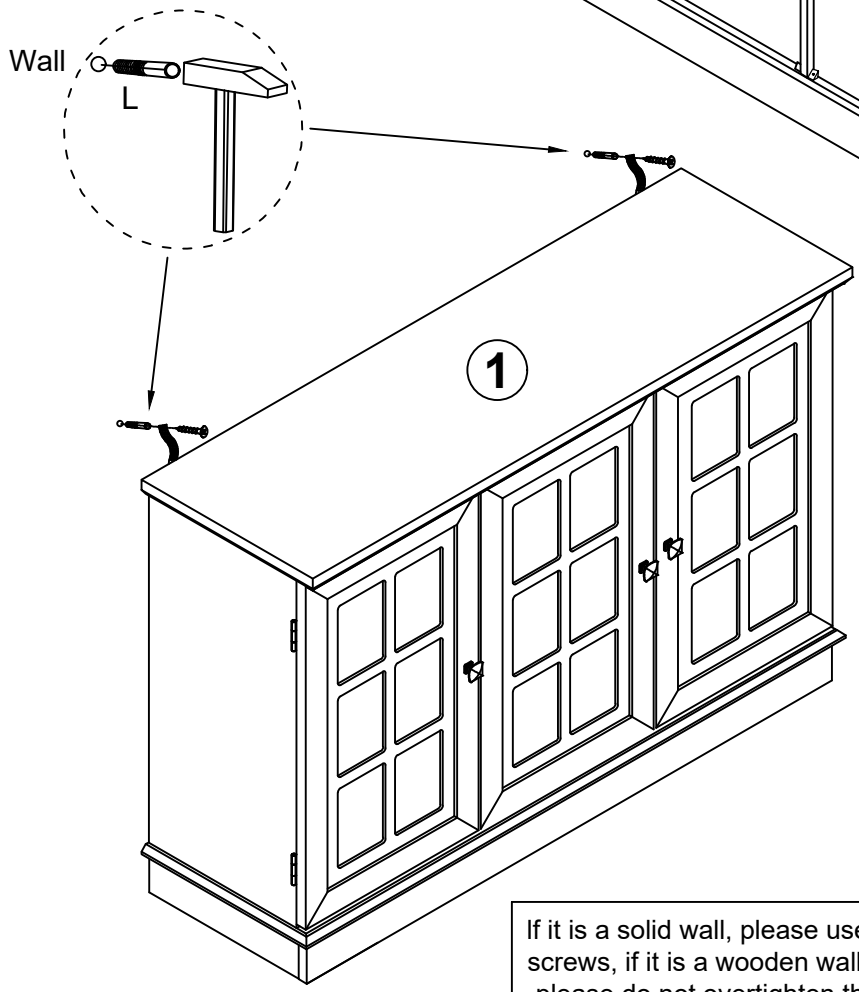

If it is a solid wall, please use expansion and self-tapping screws, if it is a wooden wall, only use self-tapping screws, please do not overtighten the screws

MADE IN CHINA