# WATERTON

## S-831W

COMPOSITE GRANITE
DOUBLE BOWL KITCHEN SINK



## DIMENSIONS

30" x 18" x 9 ½"

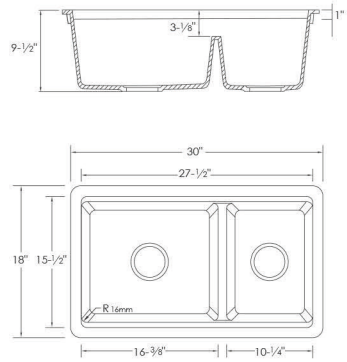


## INCLUDED ACCESSORIES



ST-01 STRAINERS
A-914BK DRYING RACK
A-909 CUTTING BOARD

## RECOMMENDED ACCESSORIES



A-04 COLANDER
A-920 CUTTING BOARD
G-831 GRIDS
ST-06 BLACK STRAINERS
A-911 BASKET
A-916BK DRYING MAT
A-916DG DRYING MAT

## SURFACE COLOUR



WHITE (H)
GRAY (L)
BLACK (N)

## CORNER PROFILE




RADIUS 16mm

## HEAT RESISTANT




## BOWL DEPTH




## INSTALLATION OPTIONS



DROP-IN
UNDERMOUNT

## MATERIAL

Made from 80% Quartz and 20% Acrylic Resin, this special hardened composite is highly stain, scratch, heat and dent resistant, and is also extremely easy to clean and maintain.

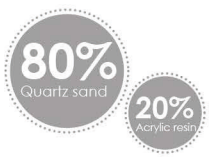


## PRODUCT DIMENSIONS

| | |
|---|---|
| Overall Dimensions | 30" x 18" x 9 ½" |
| Internal Dimensions | 27 ½" x 15 ½" x 9 ½" |
| Left Basin | 16 ⅜" x 15 ½" x 9 ½" |
| Right Basin | 10 ¼" x 15 ½" x 9 ½" |
| Drain Openning Size | 3 ½" |

## DRAIN HOLE SIZE




## STANDARD STRAINERS

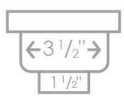


## CABINET SIZE

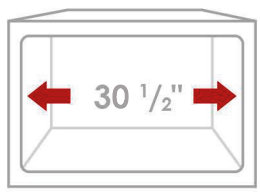


MINIMUM
INTERNAL SIZE

## GARBAGE DISPOSAL

Stylish® sinks have on standard 3 ½" drain opening that can fit any garbage disposal unit. The sink structure is well designed to withstand any heavy garbage disposal unit.



## WARRANTY

This product is covered by a limited lifetime warranty. Consult our website for complete details.



## STANDARDS COMPLIANCE

Meets the highest plumbing standards in North America

## PRODUCT CARE

Apply hot water and a few drops of mild dish soap.

Scrub the sink using the sponge.

After you have thoroughly scrubbed the sink, rinse it and dry using a soft cloth.

Optional: you could use a small amount of mineral oil to restore your sink's shine.


Stylish International Inc. www.stylishkb.com stylish.international.inc care@stylishkb.com +1-855-789-5352



Products and specifications shown are subject to change without notice. Please contact our technical support at care@stylishkb.com for any further queries, replacement parts requests, etc. ©2021 Stylish® all right reserved.