CHIC TEAK

Assembly Instruction

MAKE SURE THE LETTERS MATCH BEFORE ASSEMBLING

SCAN THIS QR CODE WITH YOUR SMARTPHONE CAMERA FOR ADDITIONAL INSTRUCTIONS

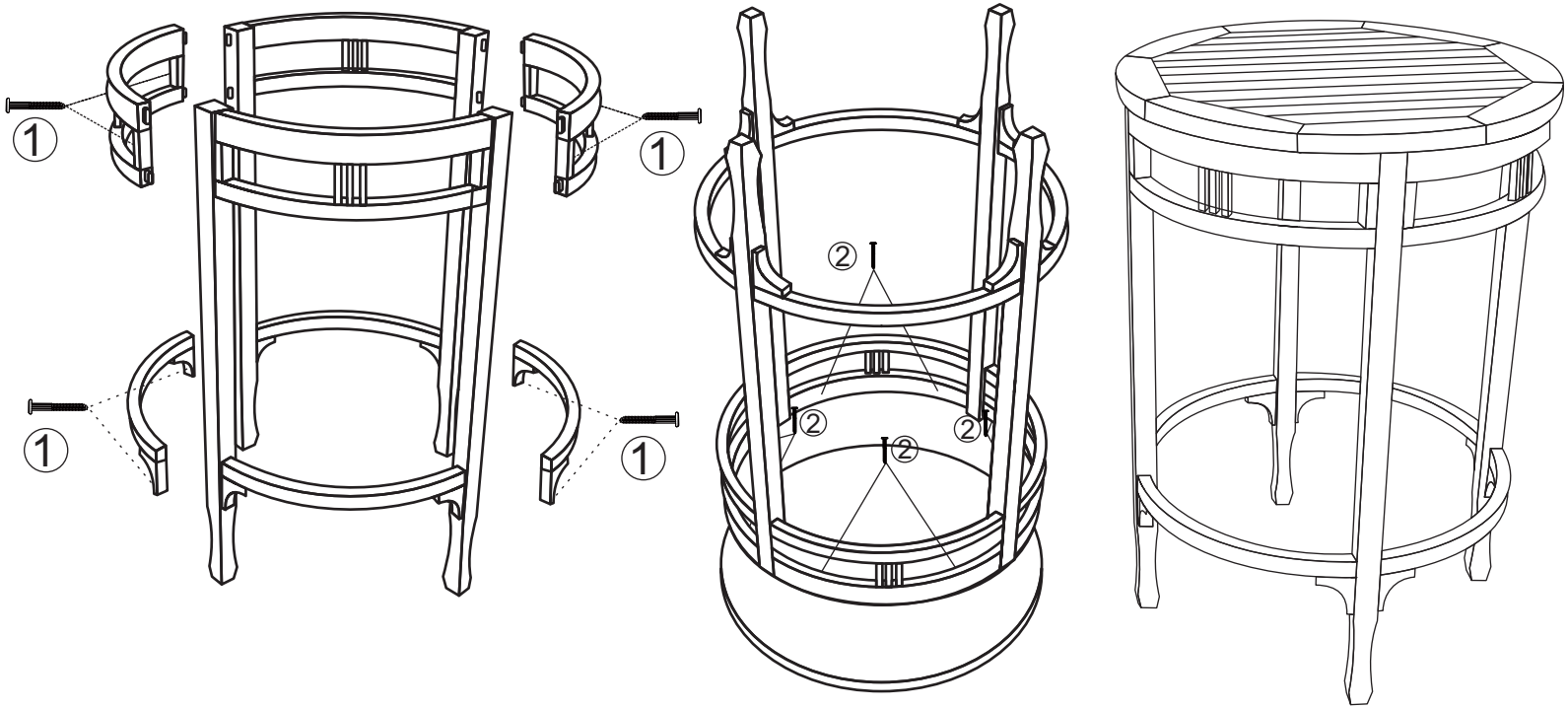

Make sure to use Glue on all wood joints before assembly (Included in package)

Code

MJ29UL

Hardware

1. F. Bolt 50 mm (8 Pcs)

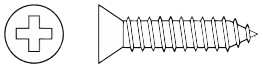

2. Screw 30mm (8 Pcs)

Tool

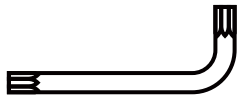

Socket Wrench 4m/m Ht

Total Section

7 Section