TEAR SHEET



Anette Single Sconce

Item # RL 2250NB-SP

Designer: Ralph Lauren

Height: 10.75"
Width: 7.25"
Extension: 12"
Backplate: 4.75" Round
Finishes: NB, PN
Shade Treatments: NB, PN, SP
Shade Details: 2.25" x 7.25" x 4.75"
Socket: E12 Candelabra
Wattage: 40 B11
Weight: 2 Pounds

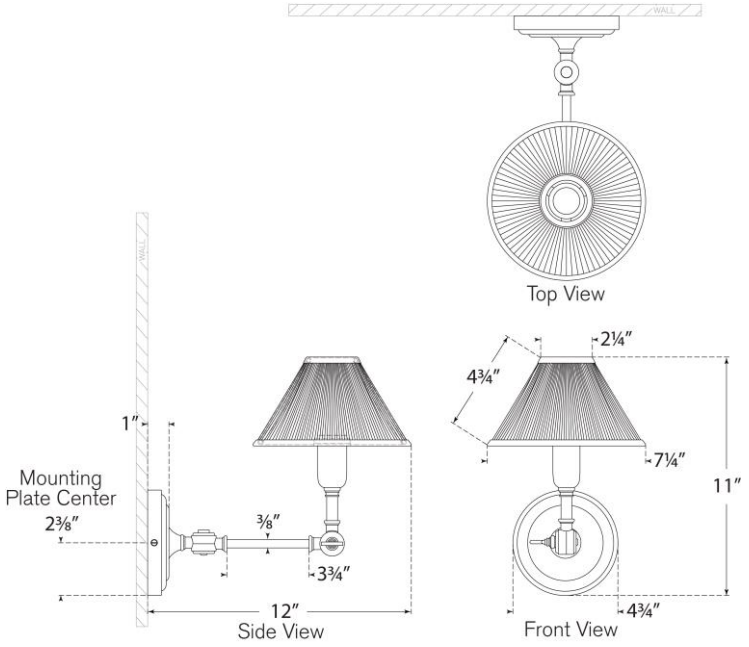

VISUAL COMFORT & CO.