SS101-AL **v-1.0**

ALIVING

SECTIONAL SOFA

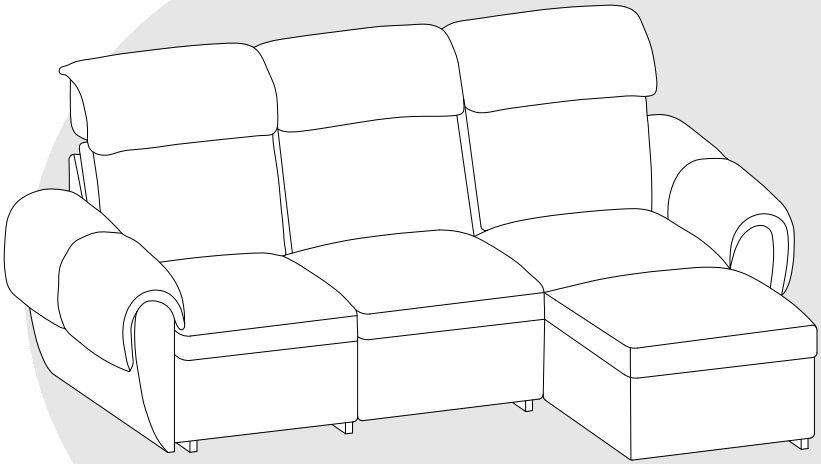

Suggestion:To make the installation process easier and faster,we recommend that two people work together to install the **SECTIONAL SOFA**.

25J28MS
HQ1399

INSTALLATION INSTRUCTIONS

This product is a multi-functional modular sofa with a variety of combinations, which can be selected according to your own needs.

Single Sofa (1 Foundation, 1 Ottoman) 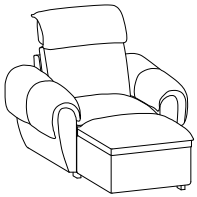	Loveseat (2 seats) 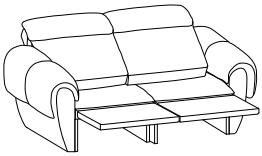
Loveseat sofa (1 electric seat, 1 base position, 1 ottoman position) 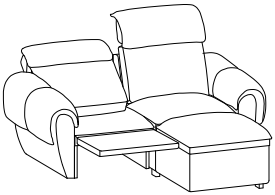	Loveseat sofa (2 base positions, 4 ottomans) 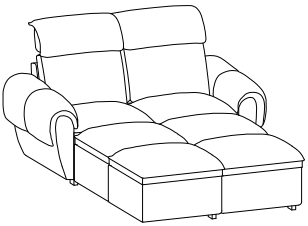
Three-seater sofa (3 electric seats) 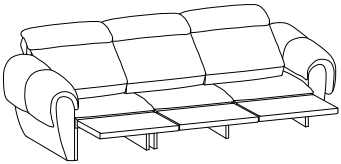	Three-seater sofa (2 electric seat, 1 base seat, 1 ottoman seats) 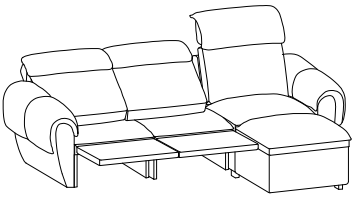

This product is a multi-functional modular sofa with a variety of combinations, which can be selected according to your own needs.

Three-seater sofa (1 electric seat, 2 base seat, 2 ottoman seats) 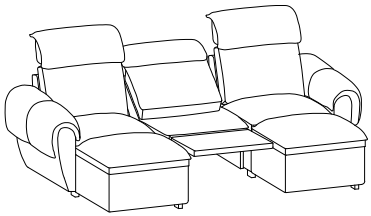	Quadruple sofa (2 electric seats, 2 basic seats, 2 ottomans) 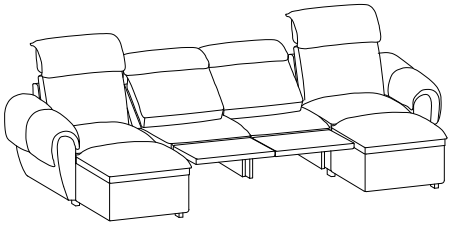
Quadruple sofa (2 electric seats, 2 basic seats, 2 ottomans) 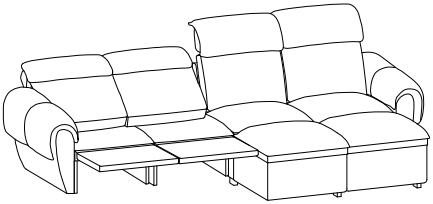	Quadruple sofa (4 basic seats, 4 ottomans) 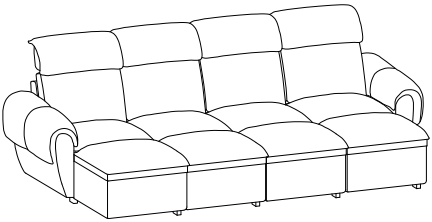

For more combinations, please refer to the official website.

EN

General Guidelines

- Please read the following instructions carefully and use the product accordingly.
- Please keep this manual and hand it over when you transfer the product.
- This summary may not include every detail of all variations and considered steps. Please contact us when further information and help are needed.

Notes

- Product is intended for indoor use only.It must be assembled and used according to the instrucions. The seller does not accept any responsibility for damage or injury resulting from improper assembly or use.
- Please avoid long-term exposure to humid environment to prevent mildew.
- During assembly, align all screws with the corresponding pre-drilled holes first and then tighten them one by one.
  Inspect the screws regularly. Screws may become loose during long-term use.If necessary, retighten them to ensure stability and security.

Warnings

- Children are not allowed to assemble the product. During assembly, keep any small part out of reach of children as they may be fatal if swallowed or inhaled.
- Children are not allowed to stand, climb or play on the product to avoid serious bodily injury by the toppling.
- Keep plastic packing bags out of reach of children to avoid any potential danger, such as suffocation.
- Avoid sharp objects and corrosive chemicals to prevent damage to the product or bodily injury.

DE

Einleitung

- Bitte lesen Sie die folgende Anleitung aufmerksam durch und verwenden Sie das Produkt sachgemäß.
- Bewahren Sie diese Anleitung gut auf und händigen Sie sie bei Weitergabe des Produkts an Dritte ebenfalls mit aus.
- Aus Gründen der Übersicht können nicht alle Details zu allen Varianten und denkbaren Montagen beschrieben werden. Wenn Sie weitere informationen und Hilfe benötigen, kontaktieren Sie uns bitte.

Hirweise

- Dieses Produkt ist nur für den Gebrauch in Innenräumen vorgesehen. Eine andere Verwendung als beschrieben, oder eine Veränderung/ein Umbau des Produkts ist nicht erlaubt und kann zu Verletzungen und/oder Beschädigungen des Produkts führen. Der Händler übernimmt keine Haftung für Schäden, die durch unsachgemäBen Gebrauch oder falsche Montage entstanden sind.
- Halten Sie das Produkt nicht langfristig in einer feuchten Umgebung, um Schimmel zu vermeiden.
- Ziehen Sie die Schrauben bitte zuerst nicht an. Nachdem Sie alle Schrauben eingesetzt haben, schrauben Sie sie erst vorsichtig fest.
- Prüfen Sie regelmäBig den festen Sitz der Schrauben und Verbindungen, falls notwendig nachziehen.

Warnhinweise

- Halten Sie Kinder bei der Montage fern, da Kleinteile bei Verschlucken oder Einatmen tödlich sein können.
- Um mögliche Körperverletzungen zu vermeiden, ist es Kindem verboten, auf diesem Produkt zu klettern oder damit zu spielen.
- Schützen Sie Ihre Kinder von Verpackungsteile wie Folien oder Plastikbeutel fern, da Verpackungsteile oft nicht erkennbare Gefahren bergen (z. B. Erstickungsgefahr).
- Halten Sie spitze Gegenstände und ätzende Chemikalien vom Produkt fern, da diese die Oberfläche beschädigen können.

FR

Introduction

- Lisez attentivement ces instructions et utilisez votre produit d'après ce mode d'emploi.
- Conservez ces instructions. Si vous souhaitez offrir ce produit à un tiers, joignez obligatoirement ce mode d'emploi.
- Pour des raisons de clarté. les détails concernant chaque variante ou montage envisageable ne peuvent être tous décrits. Si vous souhaitez obtenir plus d'informations ou si vous rencontrez certains problèmes non traités de manière détailée dans ces instructions, veuillez nous contacter.

Notes

- Ce produit est concu pour une utilisation à l'intérieur.Le produit doit être monté et utilisé d'après ce mode d'emploi. Les utilisations qui ne correspondent pas à la description ci-dessus ou les modifications de l'article ne sont pas autorisées. Le vendeur ne prend aucune responsabilité des dommages causés par un montage incorrect ou une utilisation non conforme.
- Évitez de placer le produit dans un environnement humide pendant une longue durée car peut provoquer de la moisissure.

- Lors du montage, veuillez bien positionner et régler toutes les vis et les écrous, ensuite ffectuer un serrage progressif de l'ensemble des vis.
- Il est conseillé de vérifier régulièrement les vis qui pourraient se desserrer progressivement pendant l'utilisation, ce qui risque de provoquer des dommages causés par un renversement du produit, Veillez donc à vous assurer que les vis sont bien serrées.

Avertissements

- Il est interdit aux enfants de partciper à l'assemblage du produit car il comprend de nombreuses petites pièces et l'aspiration ou l'ingestion de ces pièces présente un risque mortel.
- Ne pas laissez les enfants monter ou jouer sur le produit pour éviter des blessures causés par le renversement du produit.
- Pour éviter le danger inattendu (ex. l'étouffement), gardez toutes pièces et l'emballage (films, sac plastiques, polystyrènes, etc.) loin des enfants.
- Éloignez les objets pointus ou corrosifs du produit pour éviter les dommages possibles.

IT

Linee guida generali

- Si prega di leggere attentamente le seguenti istruzioni e usare il prodtto in modo opportuno.
- Si prega di conservare questo manuale e consegnarlo quando il prodotto cambia proprietario.
- Questo riassunto potrebbe non includere ogni dettaglio di tutte le variazioni e le fasi considerate. Contattaci se hai bisogno di ulteriori infomazioni e assistenza.

Note

- Il prodottoe inteso esclusivamente per uso iterno. Deve essere assemblato e usato come descritto nelle istruzioni. Il rivenditore non accetta alcuna responsabilità per danni o infortuni risultanti da assemblaggio o uso improprio.
- Si prega di evitare esposizione prolungata a ambienti umidi per prevenire la formazione di muffa.
- Durante l'assemblaggio, allineare tutte le viti con i fori corrispondenti, quindi stringerle una ad una.
- Controllare regolarmente le viti. Potrebbero allentarsi dopo lunghi periodi d'uso. Se necessario, stringerle nuovamente per garantire stabilità e sicurezza.

Avvertenze

- I bambini non possono assemblare il prodotto. Durante l'assemblaggio, tenere le parti di piccole dimensioni fuori dalla portata dei bambin,potrebbero essere fatali se ingerite o inalate.
- Impedire ai bambini di salire in piedi, arampicarsi o giocare sul prodotto per evitare infortuni gravi causati dalla caduta.
- Tenere le borse di plastica dell'imballaggio fuori dalla portata dei bambini per evitare qualsiasi potenziale rischio, come il soffocamento.
- Fare attenzione a oggetti appuntiti e sostanze corrosive per prevenire danni e infortuni.

ES

Acerca del manual

- Por favor, lea detenidamente las instrucciones y respete los debidos usos del producto.
- Por favor, conserve bien este manual y en caso de cesión, no omita entregarlo junto al producto.
- Este manual podria no incluir todos los detaes de cada paso del montaie. Si necesita ayuda o informacion adiciona, pongase en contacto con nosotros.

Notas

- Este producto esta disenado para uso interior, Ha de montarse y utlizarse el producto paso a paso siquiendo las instrucciones. De lo contranio, el vendedor no asume ninguna responsalibidad por los danos causados por el montaje y usos inadecuados.
- No coloque el producto en un ambiente húmedo durante un largo periodo de tiempo para evitar causar moho.
- Durante el montaje, por favor, no apriete completamente ningún tornillo,después de completar la instalación, apriete fuertemente todos los tornillos.
- Inspeccione reaularmente los tornillos. Durante el uso,los tornillos tal vez se vavan soltando, causarán daños por la caida del producto, por eso asequre que todos los tornillos estén apretados.

Advertencias

- Debido a múltiples tornillos y otras piezas pequeñas, no permita que se acerquen los niños por el riesgo de asfixia producido por tragar alguna pieza.
- No permita que el niño se suba o juegue con el producto para prevenir las lesiones causadas por la caida del producto.
- Guarde la bolsa de plástico fuera del alcance de los niños para evitar el peligro de asfixia.
- Mantenga el producto alejado de los objetos afilados y sustancias quimicas agresivas.

Aliving Reminder

Before You Start Assembling...
We're confident you'll love your AlivingHome furniture! Before you begin, let's double-check everything is perfect:

Section 1 - Color Check
Make sure the color matches your expectations by inspecting just the first piece—no need to unpack everything yet.

Section 2 - Protective Packaging
Love the color? Great! Now unbox carefully, lay out all parts, and use the instructions as a checklist. If anything's missing, pause and contact us—we're happy to help!

Section 3 - Assembly Time
Ready to build? Follow the step-by-step instructions. If you run into trouble, reach out—we'll ensure everything goes smoothly.

Return Tips
Not satisfied with your product? No worries! Follow these steps for a smooth return and quick refund:

Do's
- Check everything using the manual to ensure all items are accounted for.
- Disassemble any assembled parts and pack them separately.
- Return accessories and packing materials to the box or bundle them with plastic wrap.
- Wrap large parts in their original protective packaging.
- Close and seal the box securely.

Don'ts
- Don't toss disassembled parts or accessories loosely into the box.
- Don't throw items carelessly back into the box—they might get damaged in transit.

Accessories list

A x1

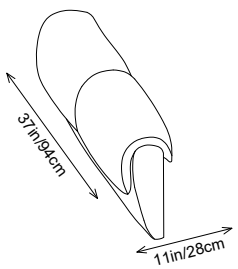

B x1

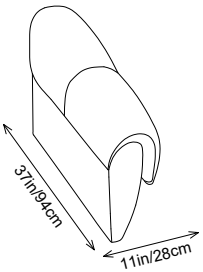

C x1

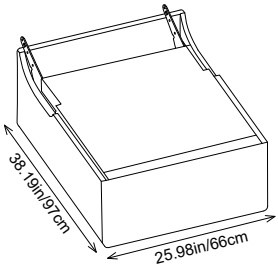

D x3

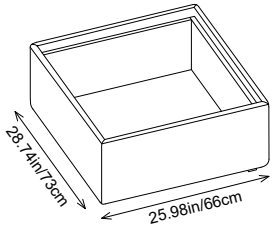

E x3

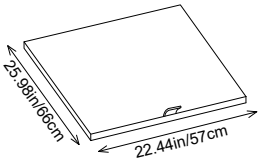

F x4

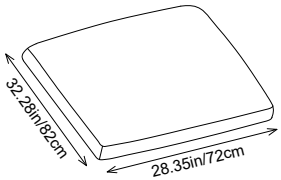

G x4

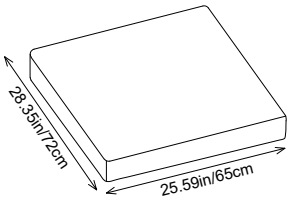

H x3

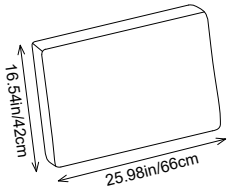

Accessories list

I x1

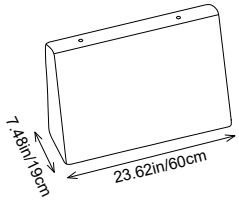

J x2

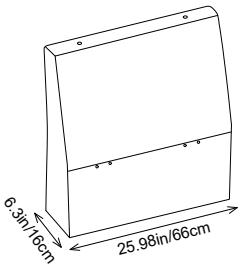

K x3

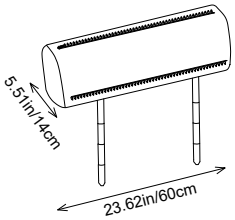

L x3

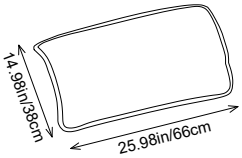

M x16

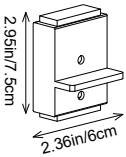

N x8

AF01-D2025-M815BK Ø20 x 25 x M8 x 15mm

O x8

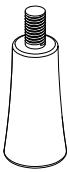

AF01-D2550-M815BK Ø25 x 50 x M8 x 15mm

Accessories list

1 x32+18 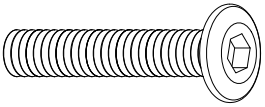 SC01-M645BK M6 x 45mm	**2 x4** HW01-M4WZ M4mm
3 x8 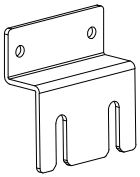 80 x 83 x 29 x 3mm	**4 x8** 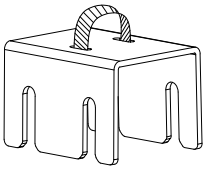 62 x 80 x 53 x 3mm
5 x1 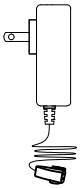 MS-BK-200-01-2	**6 x1** 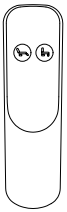 MS-BK-200-01-2
7 x4 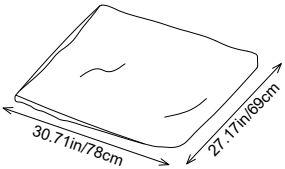 	**8 x3** 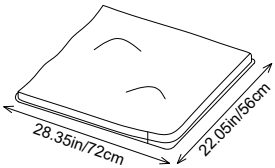

★ In many cases, we include additional hardware. So after following the assembly instructions, don't worry if there are still extra pieces left over-they're included as a "just in case" for your convenience.

EXPLODED

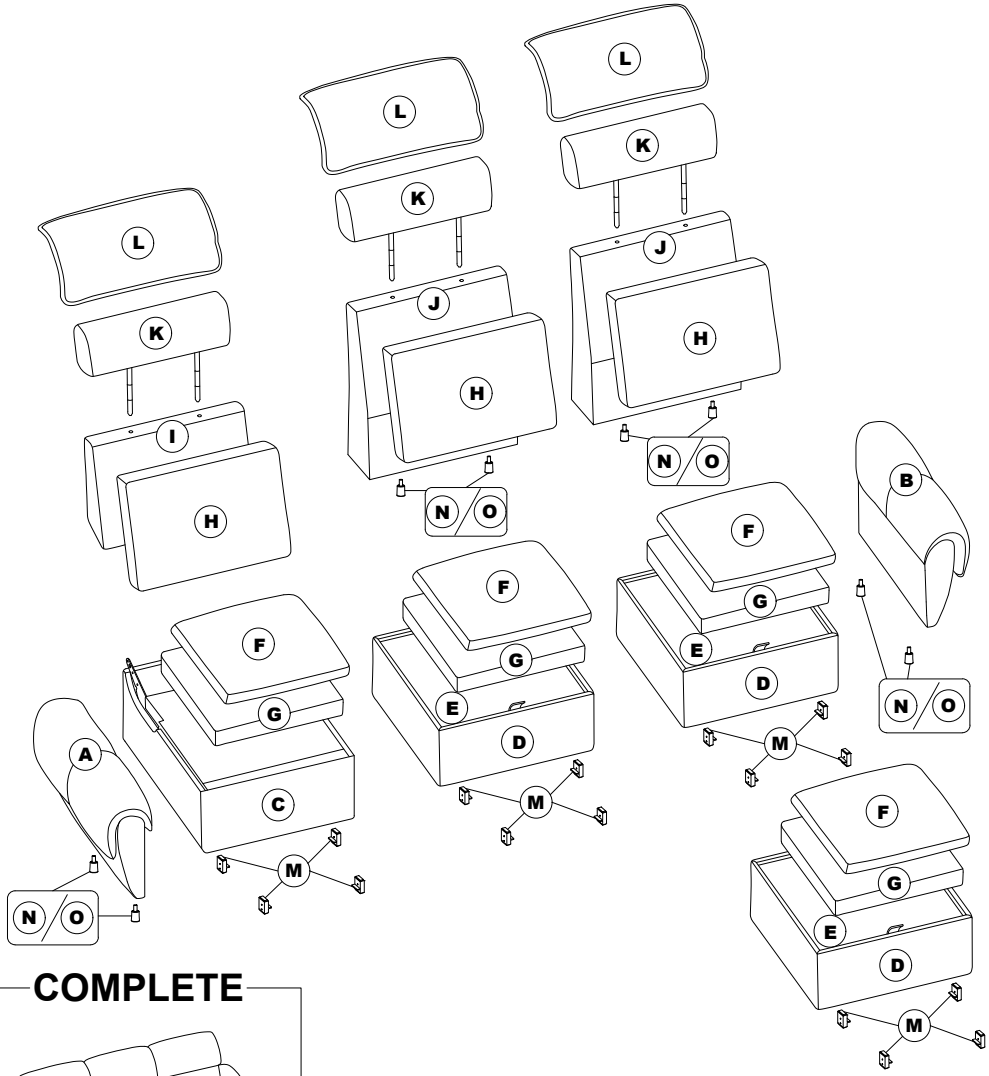

COMPLETE

⚠ Notice

According to the traction rope, find the carton,cut the tie and take out the accessories.

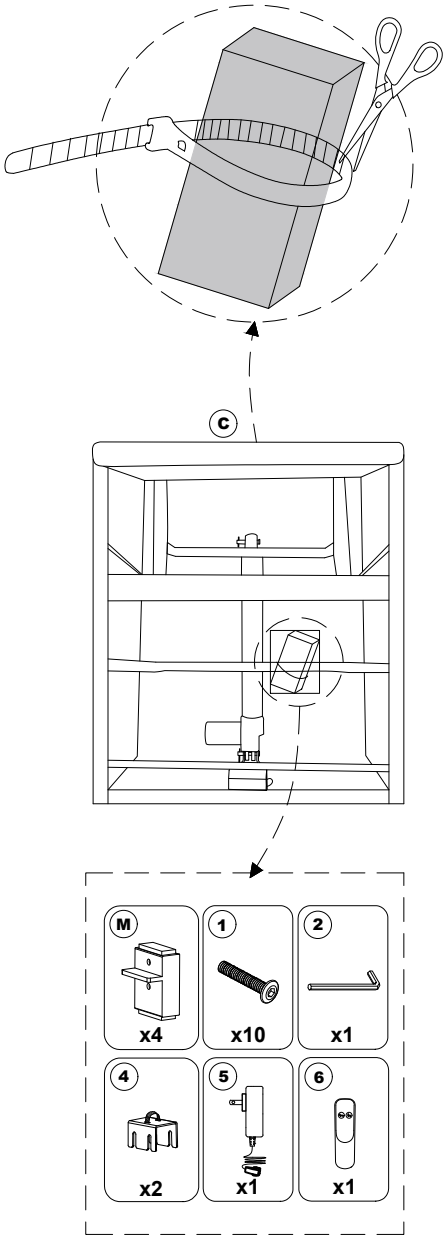

⚠ Notice

Before installing the sofa, please find the screws and other accessories needed for each component according to the illustration.

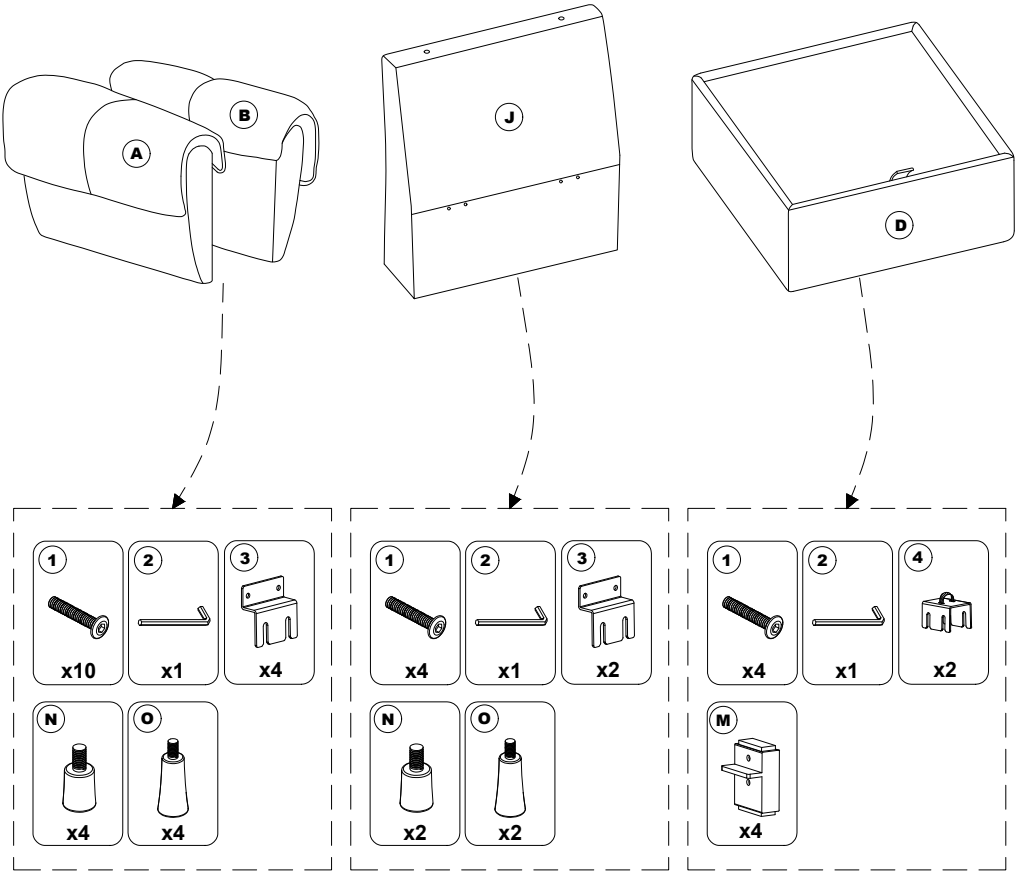

STEP 1

⚠ Notice

Open the E-board and take out the accessories inside.

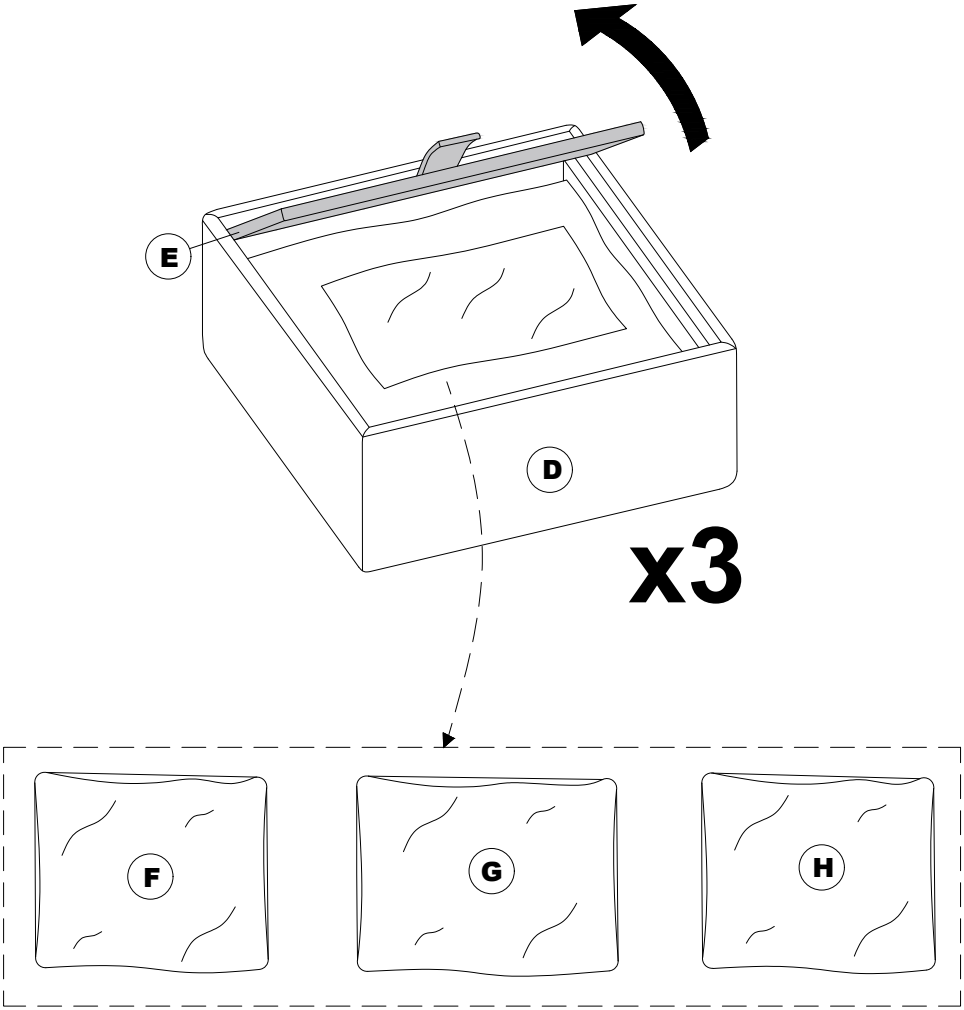

STEP 2

Vacuum compression unpacking method		
Handling method	Expected rebound time	Effect and Description
Press and pat	Within 48 hours	After taking it out, first press the soft bag to let air in, then pull the soft bag to let the down inside spread out, and finally pat the soft bag vigorously to make it full; repeat the same the next day; if after 7 days it still doesn't feel full enough, you can repeat the above steps.

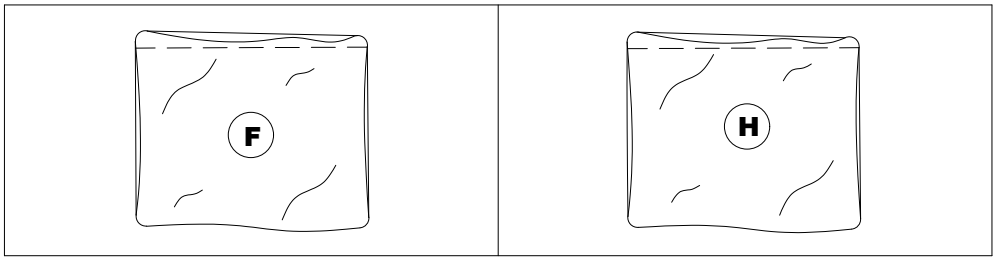

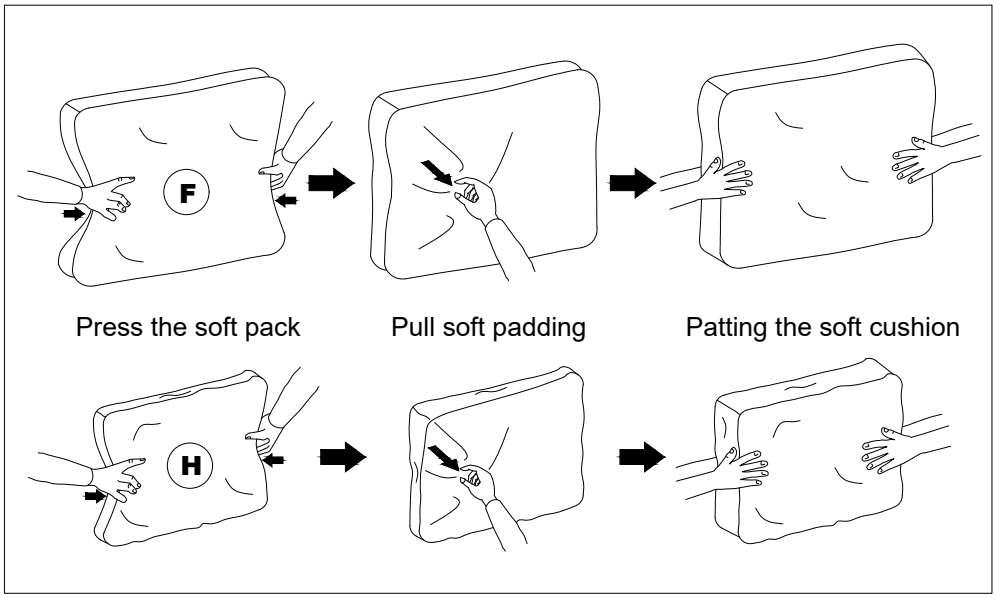

STEP 3

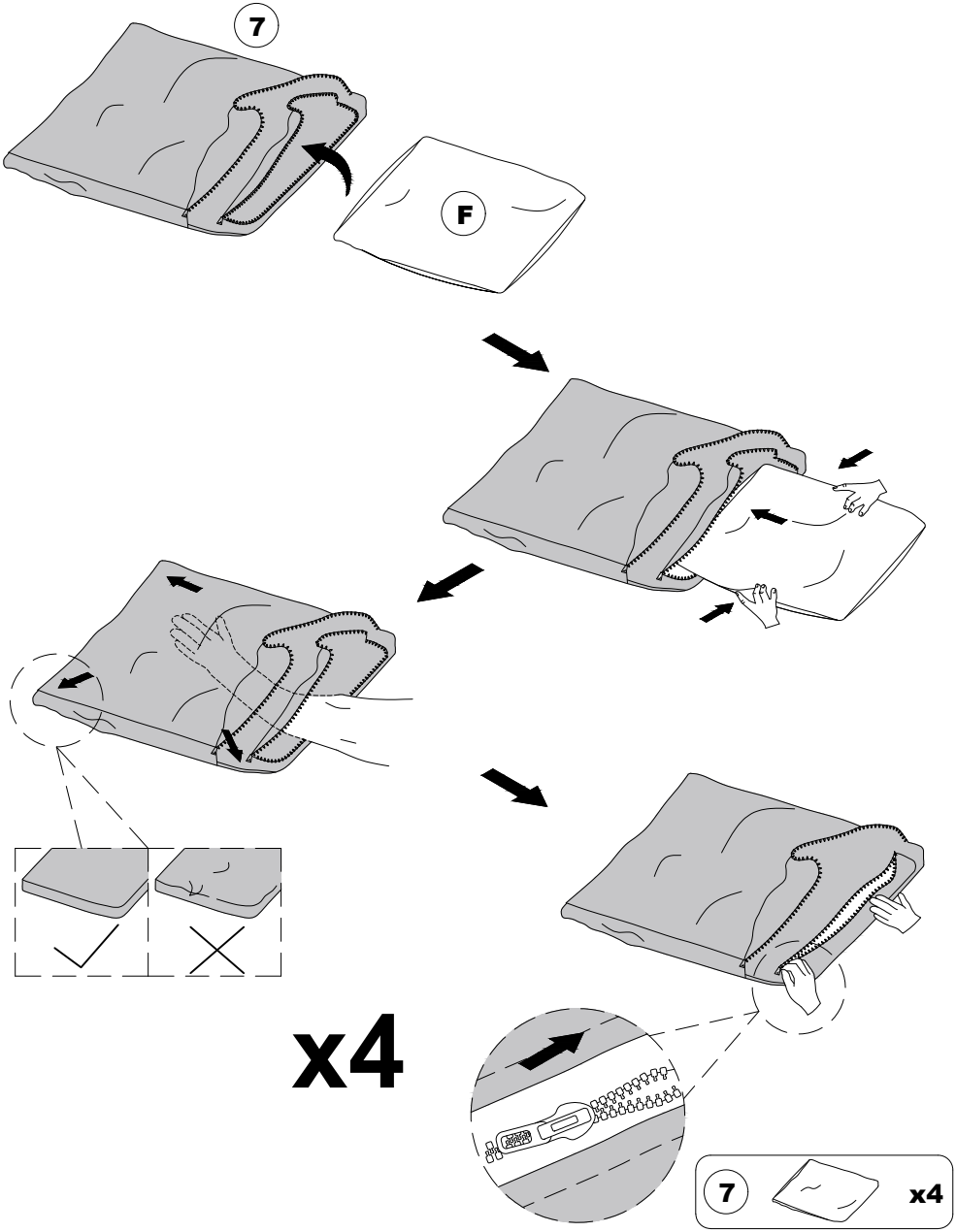

STEP 4

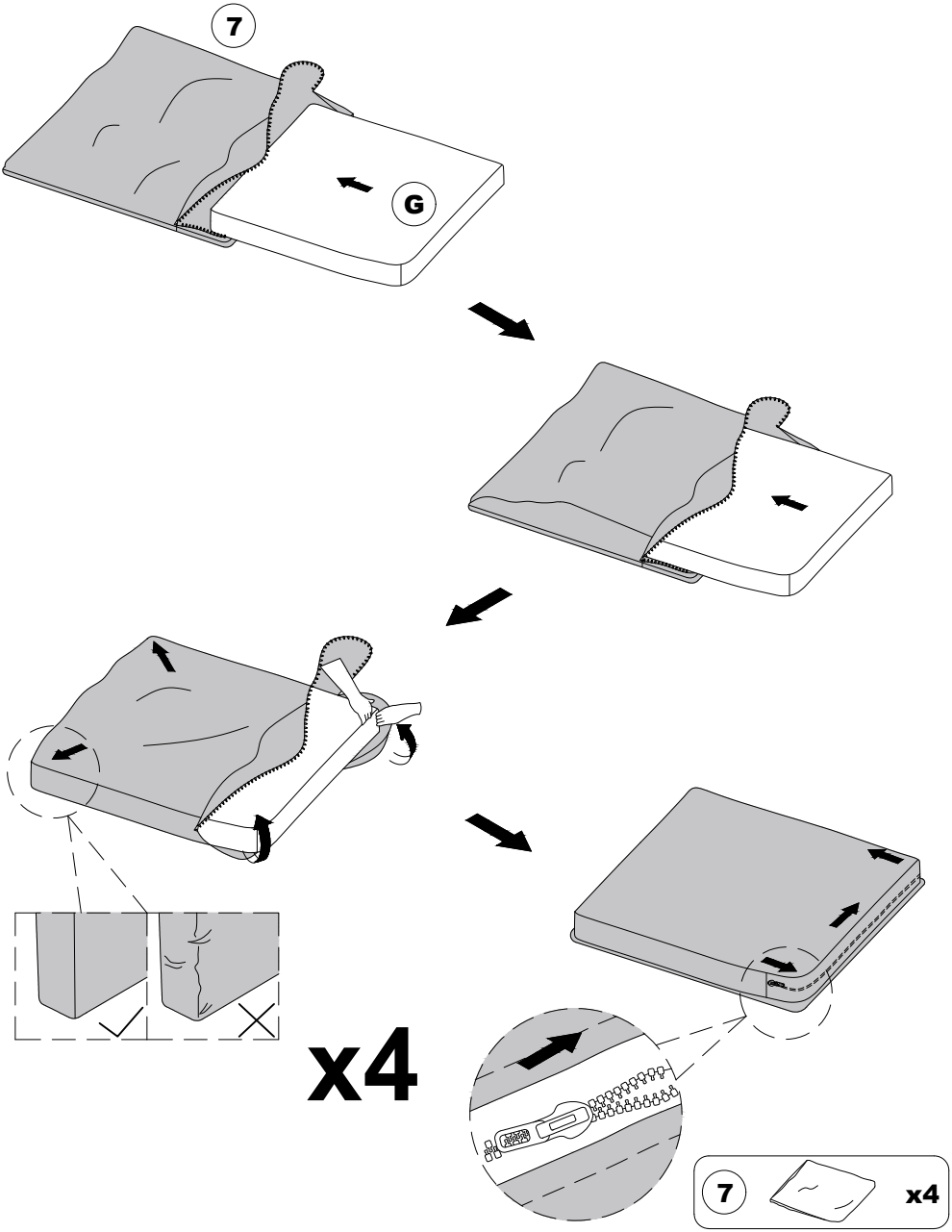

STEP 5

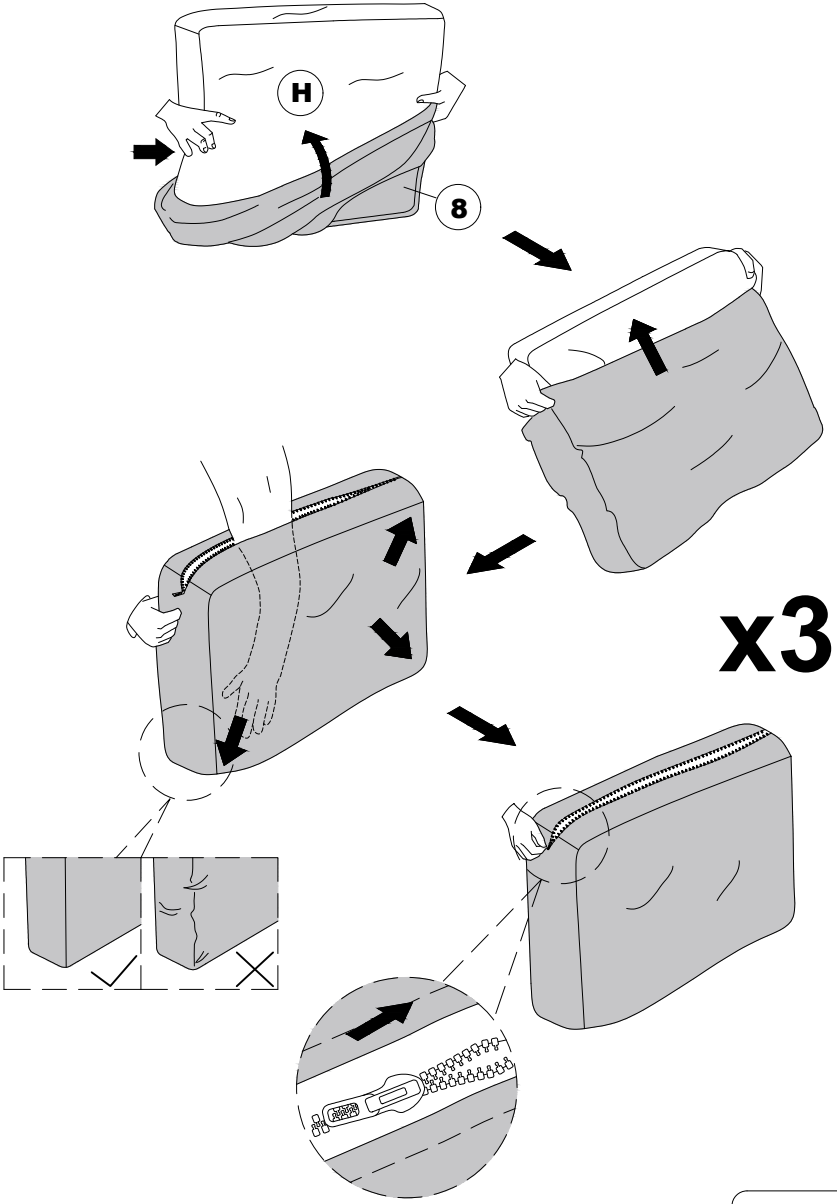

STEP 6

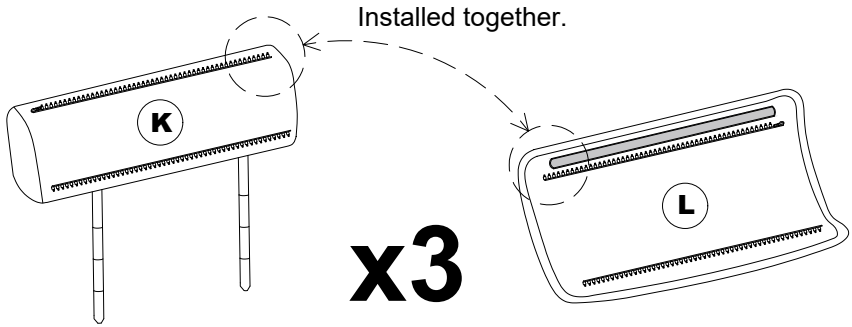

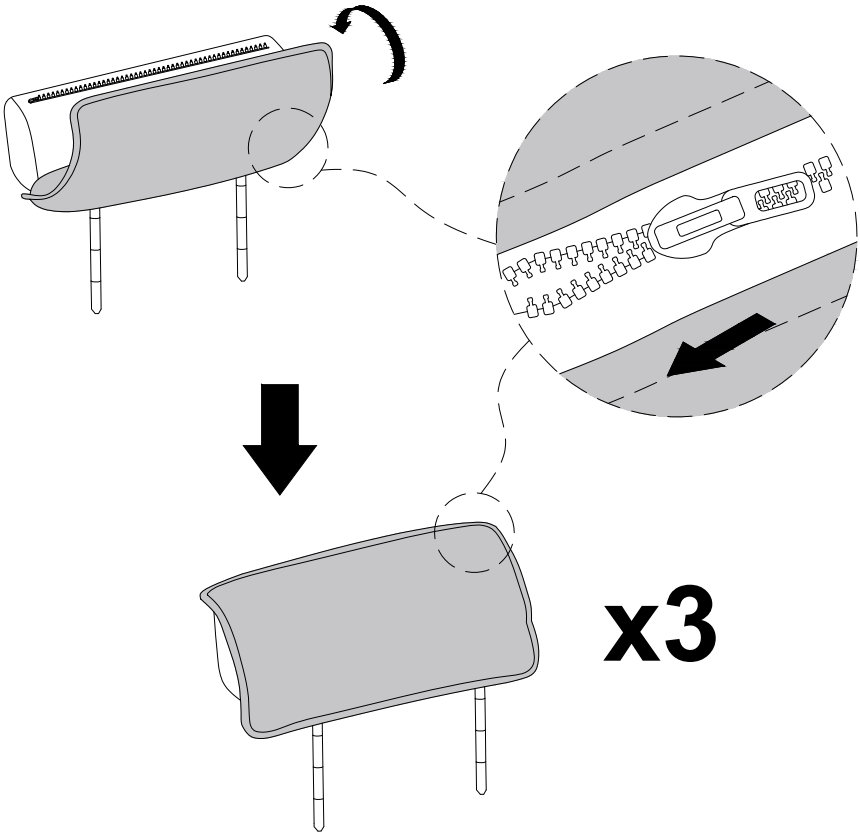

There are two installation methods for the sofa support feet, and accordingly, there are two heights for the sofa seat surface. Please choose according to your own needs.

Installation Method 1: The height of the sofa cushion is 490 millimeters.
Please refer to the steps on pages 19 to 26 for installation.

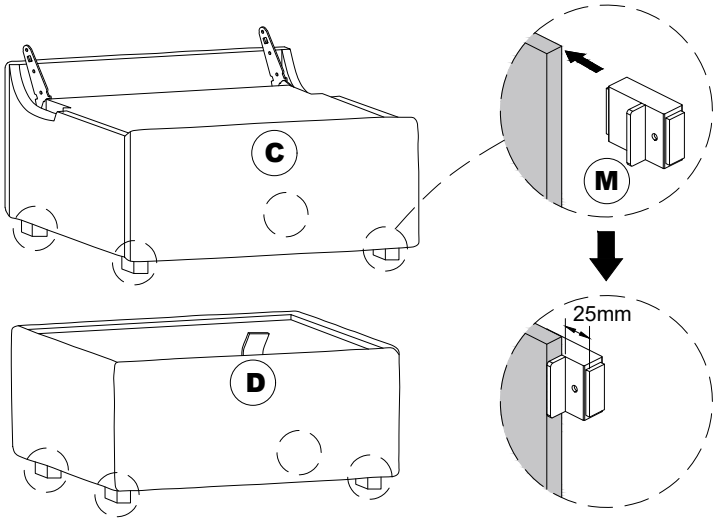

Installation Method 2: The height of the sofa cushion is 515 millimeters.
Please refer to the steps on pages 28 to 35 for installation.

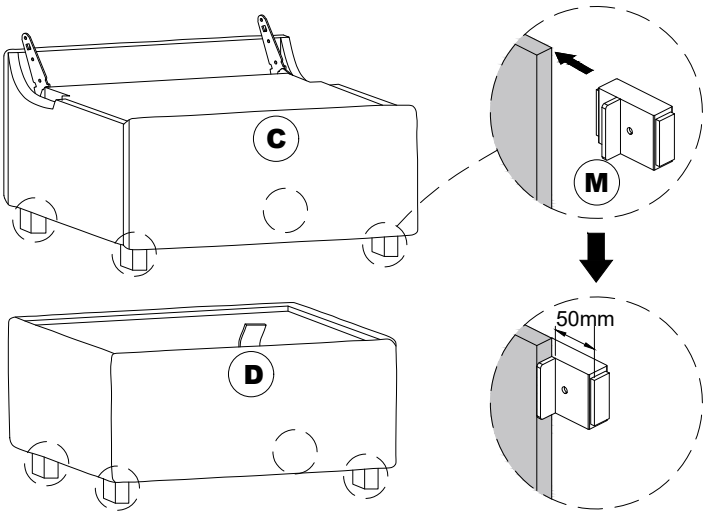

STEP 7

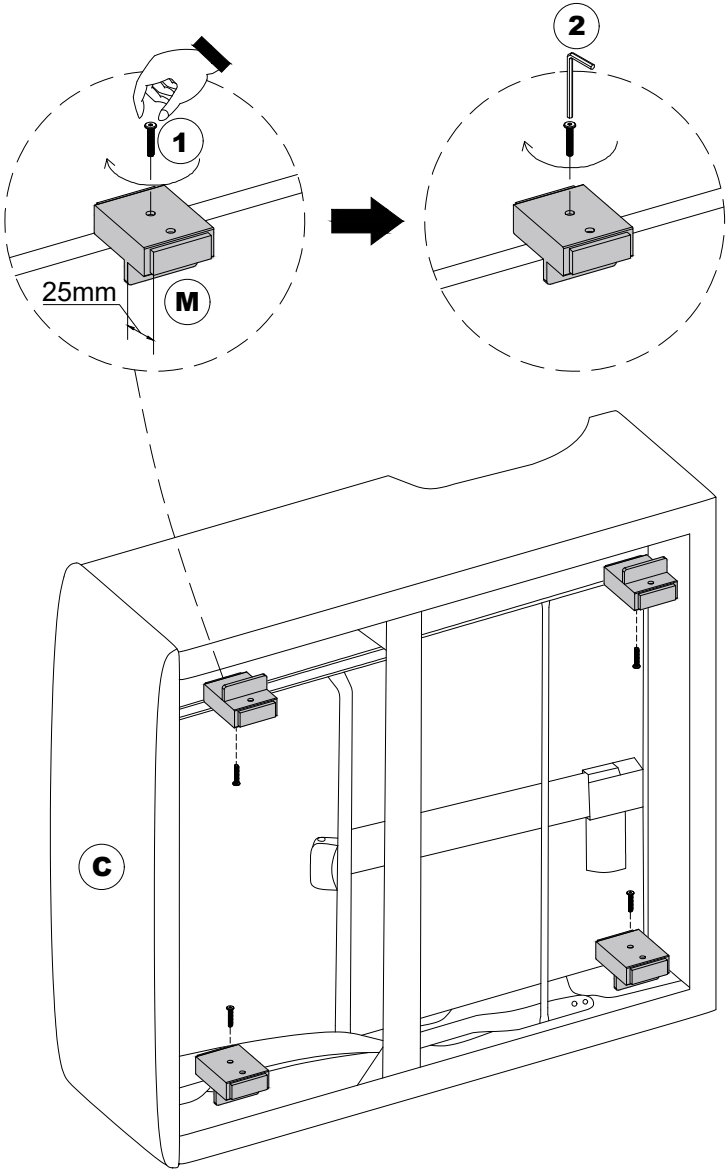

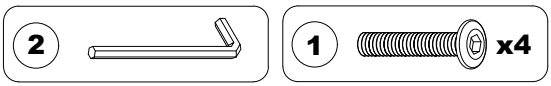

STEP 8

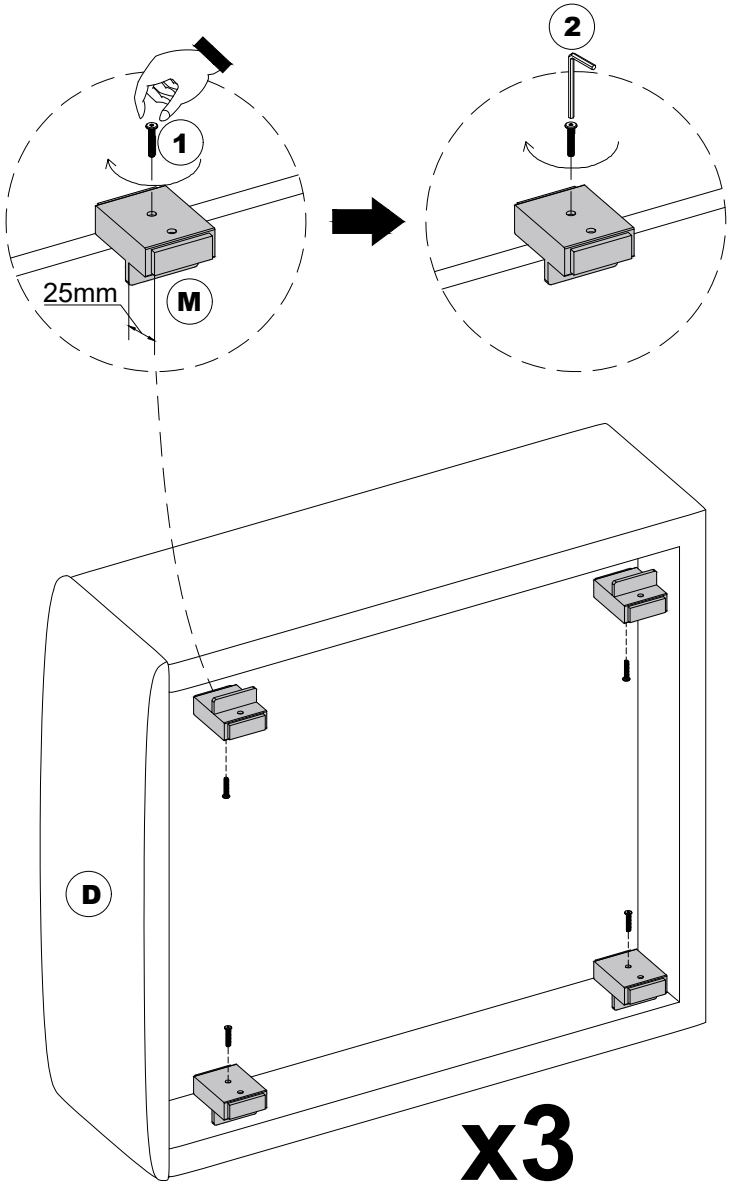

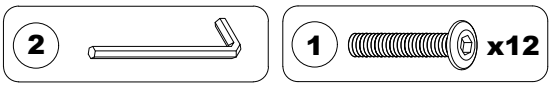

STEP 9

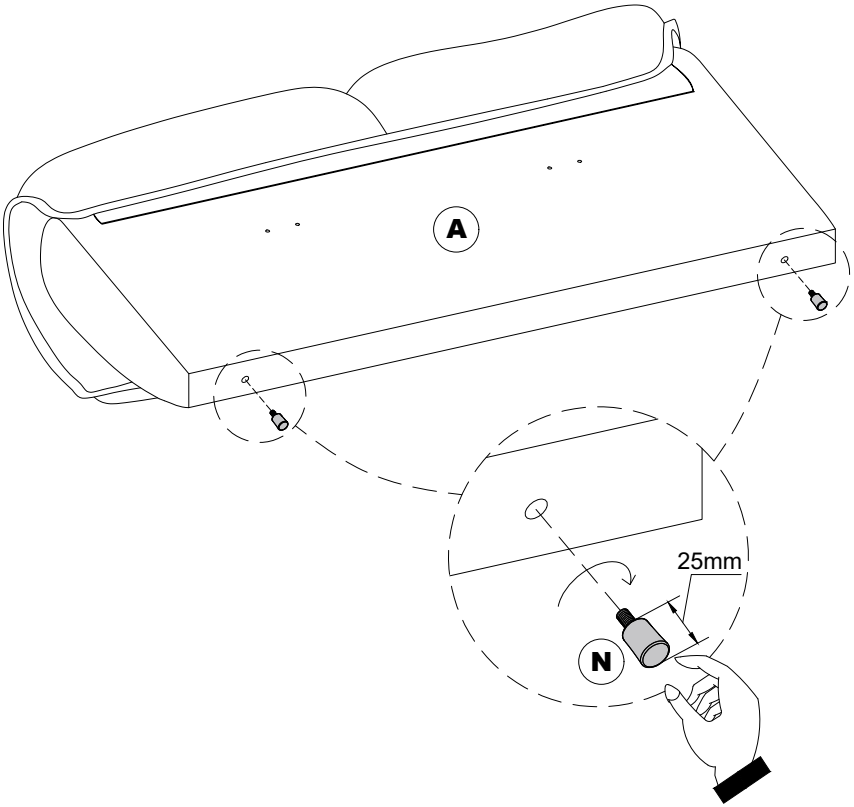

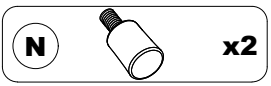

STEP 10

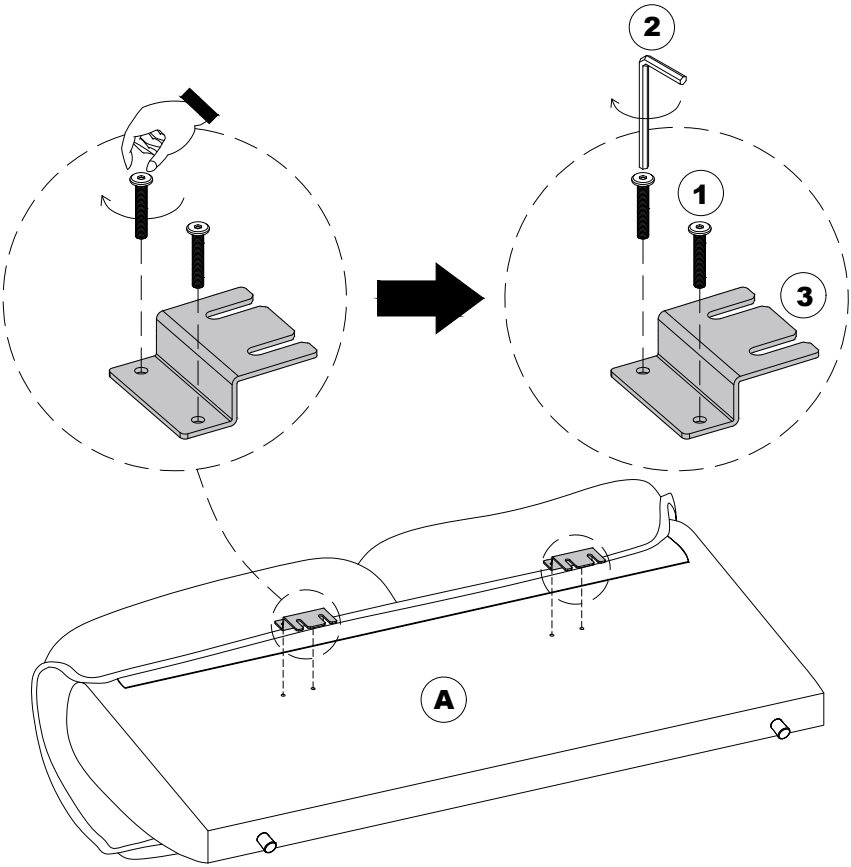

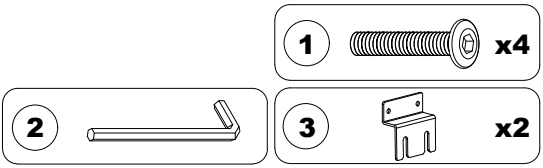

STEP 11

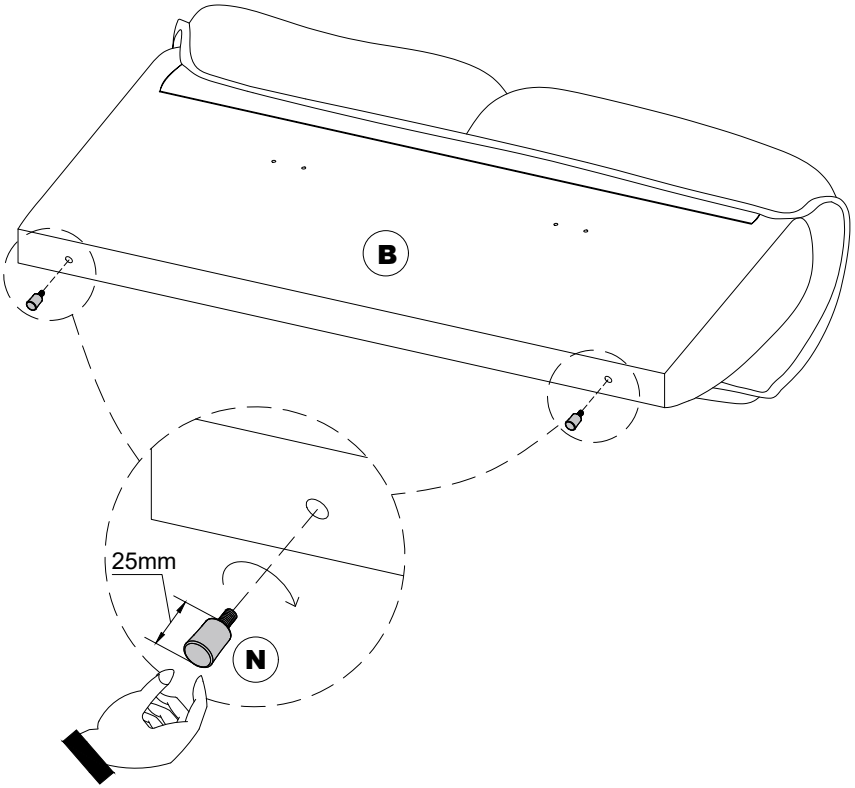

STEP 12

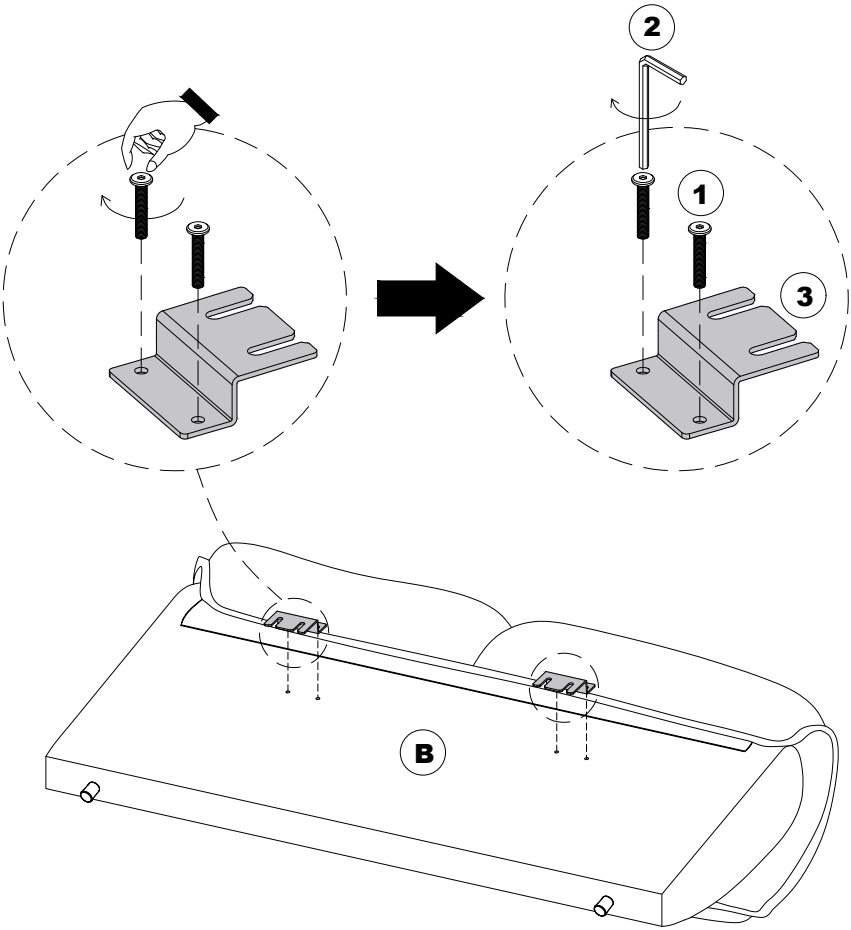

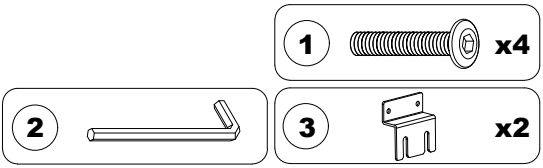

STEP 13

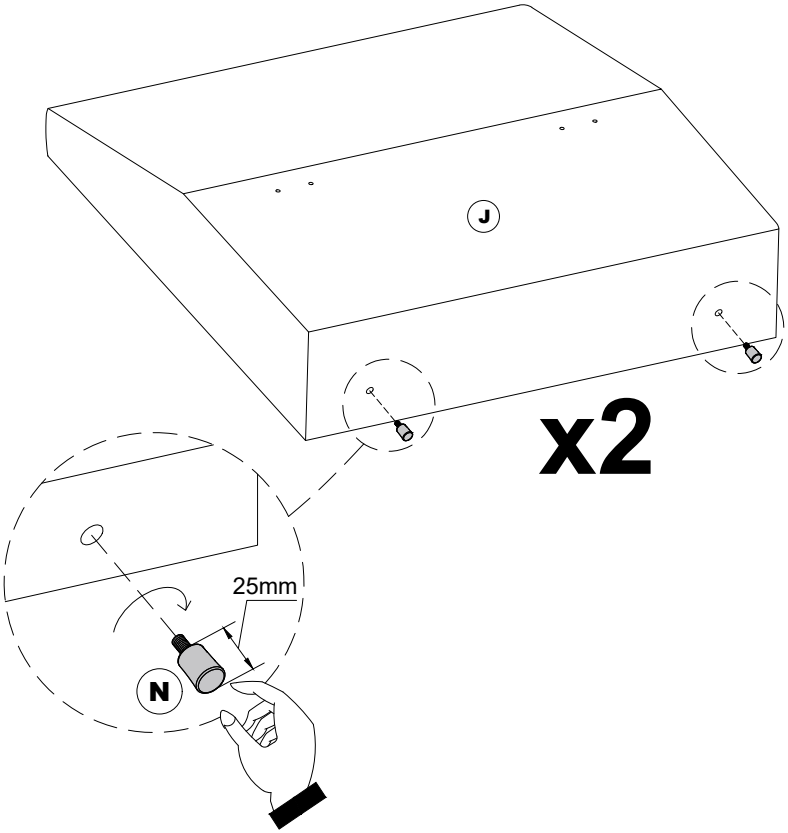

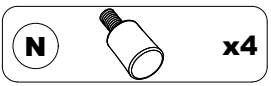

STEP 14

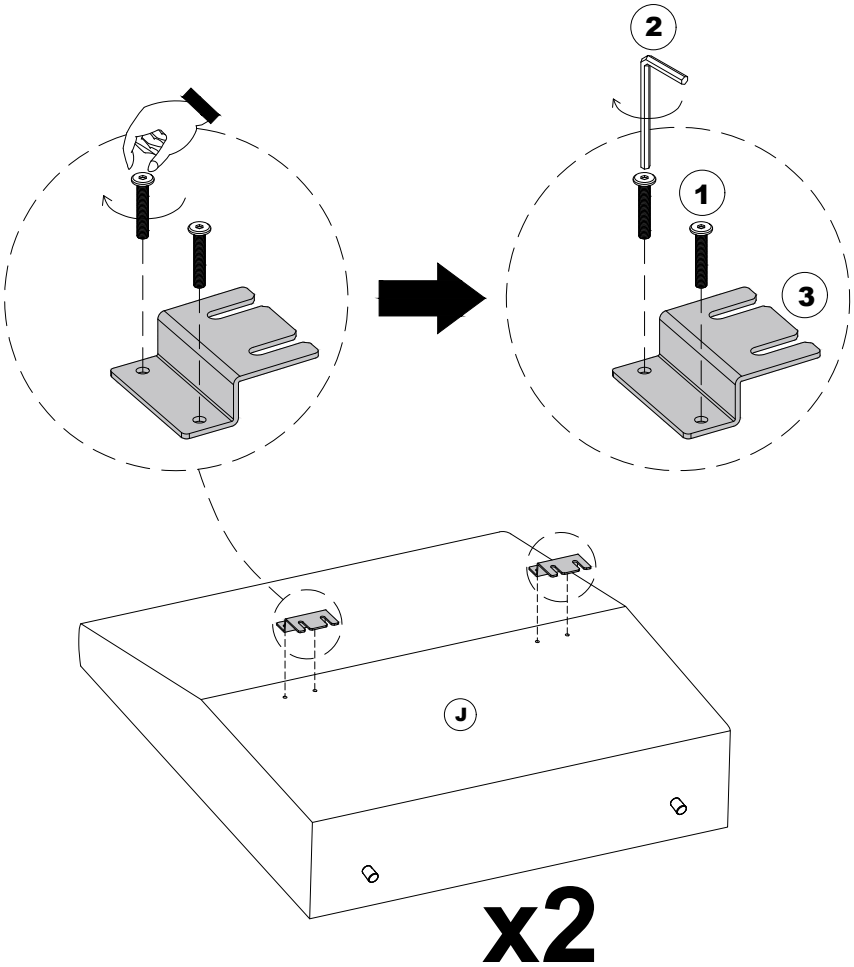

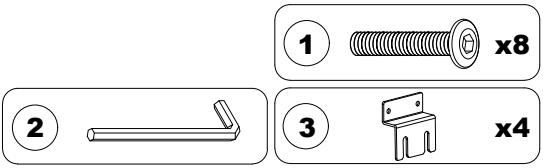

Warm reminder

If you choose Installation Method 1, after completing the steps from page 19 to 26, you can directly start installing the remaining components from Step 15 on page 36.

STEP 7

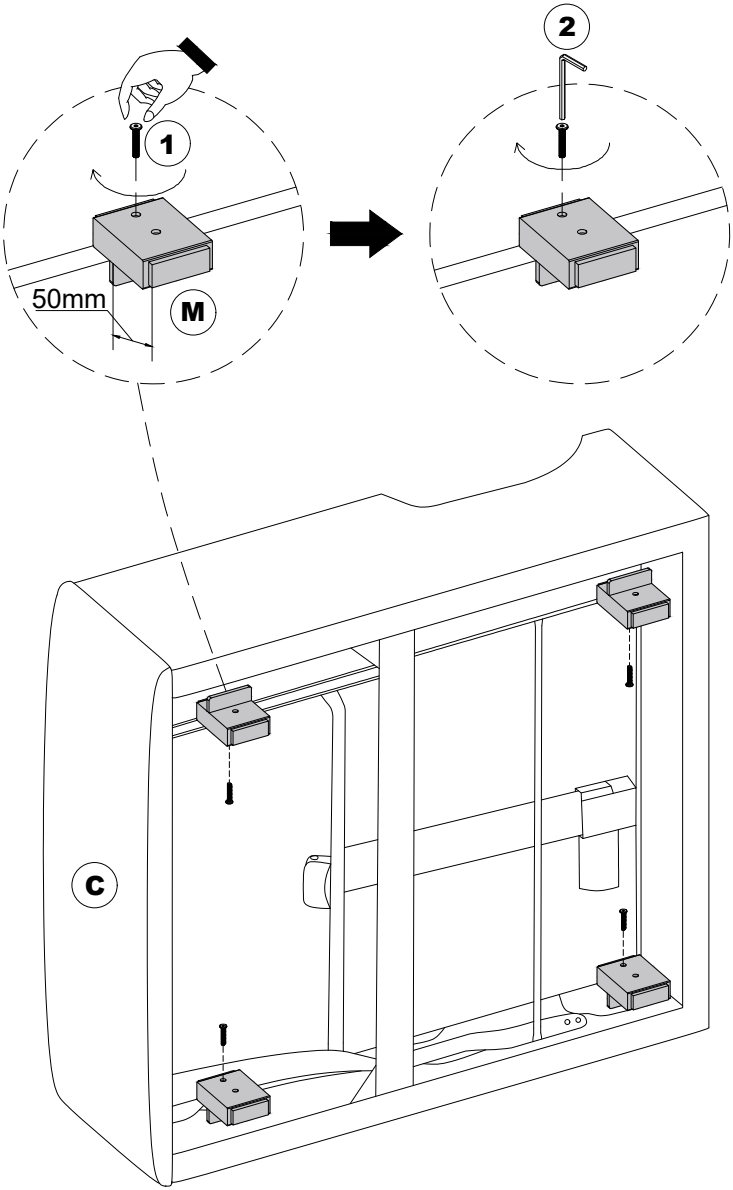

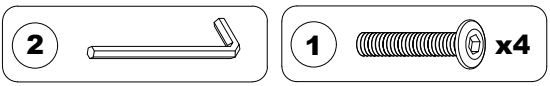

STEP 8

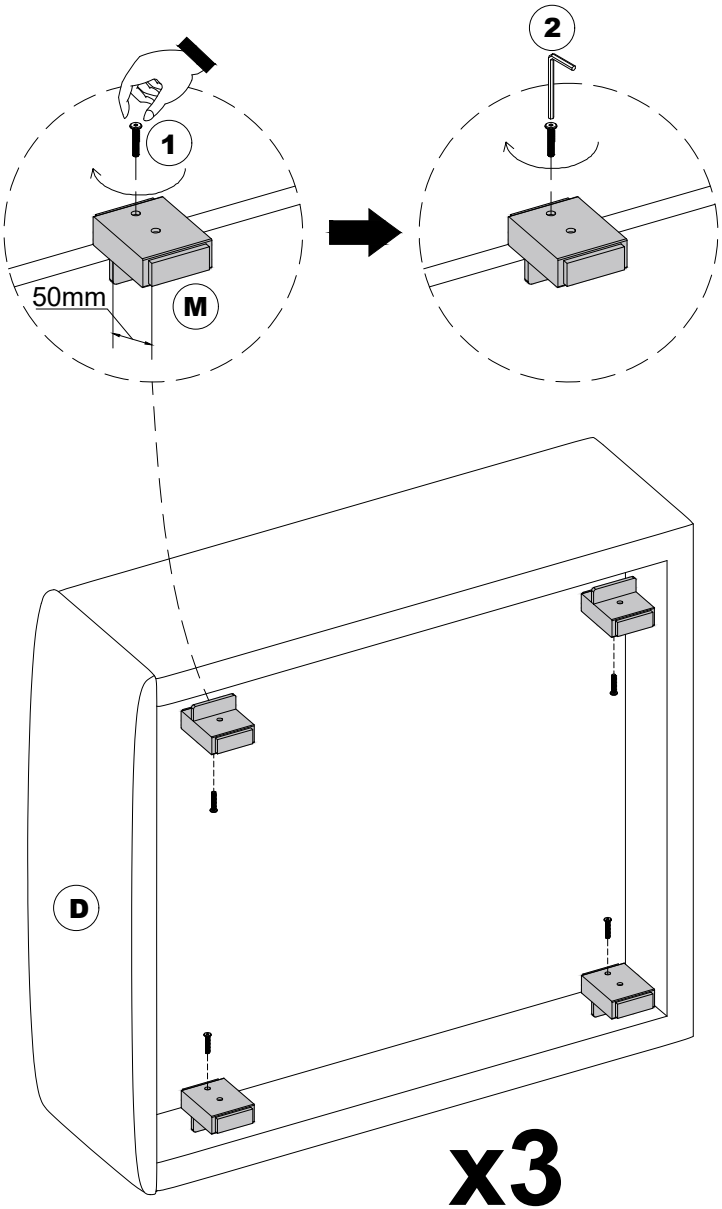

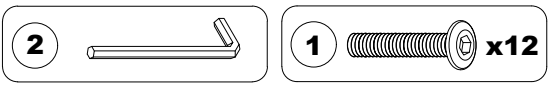

STEP 9

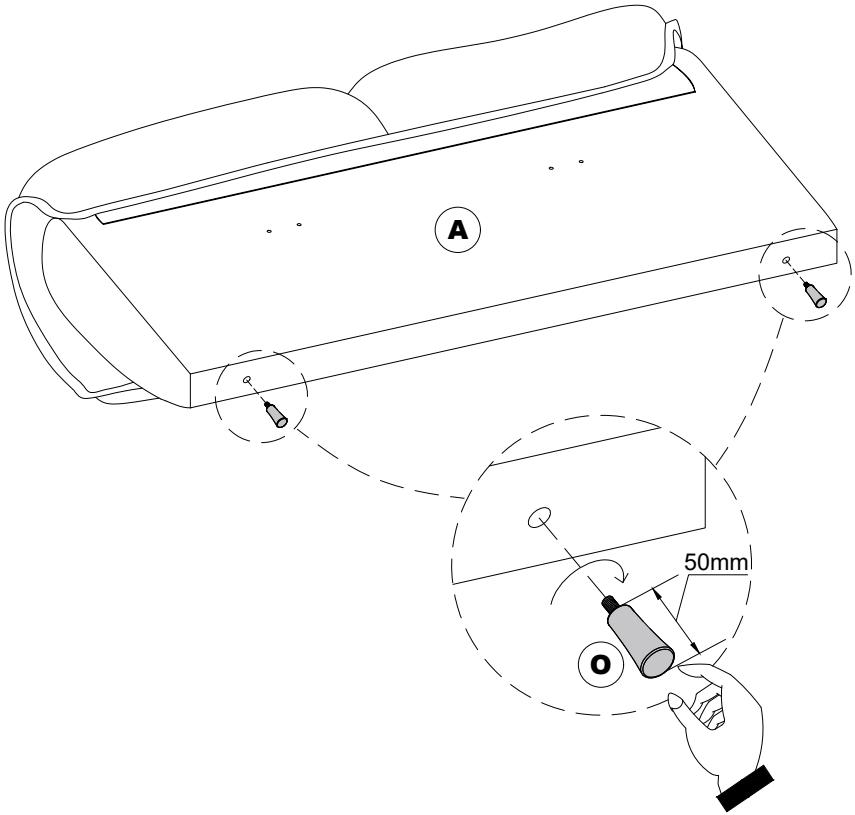

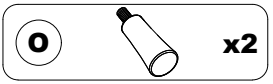

STEP 10

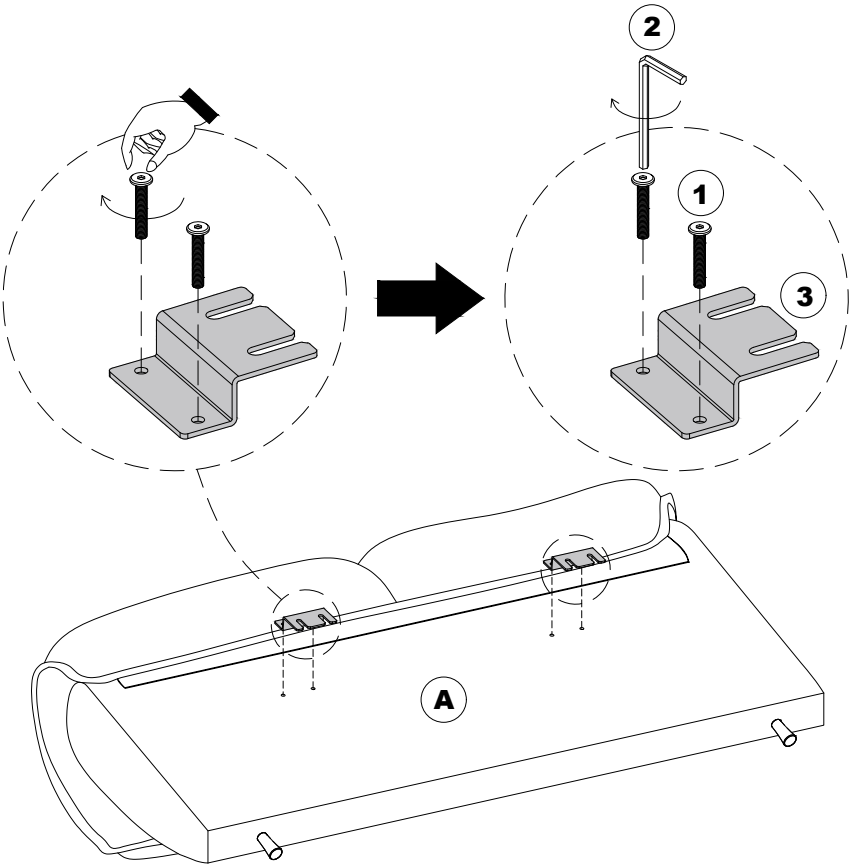

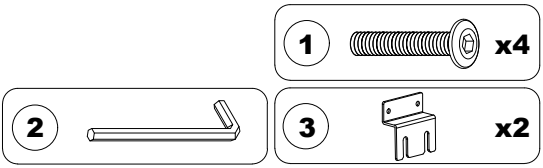

STEP 11

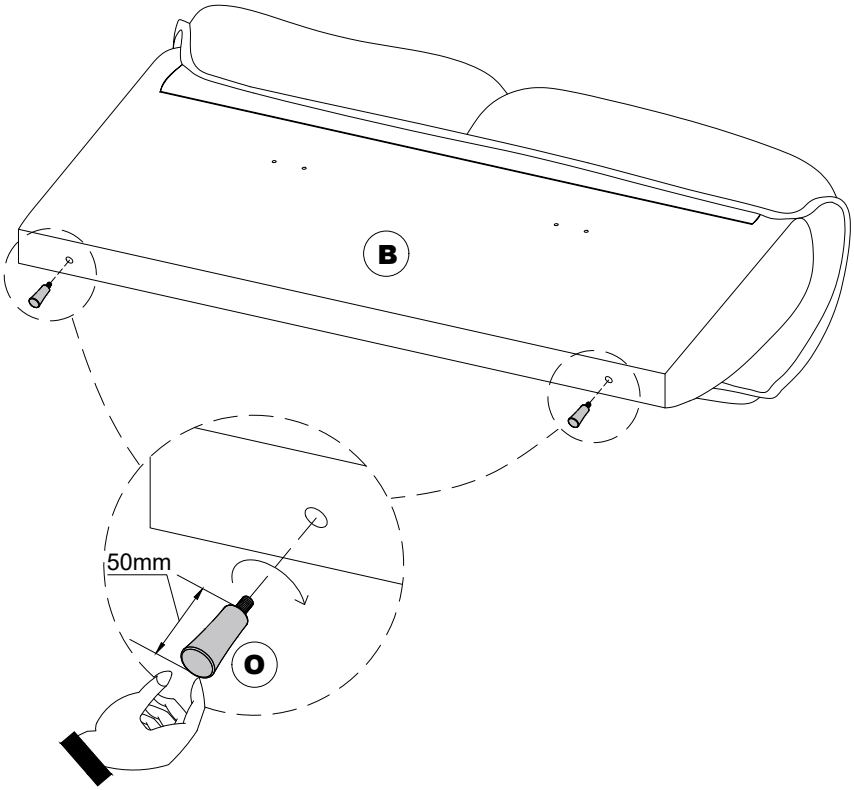

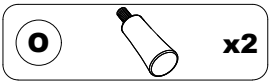

STEP 12

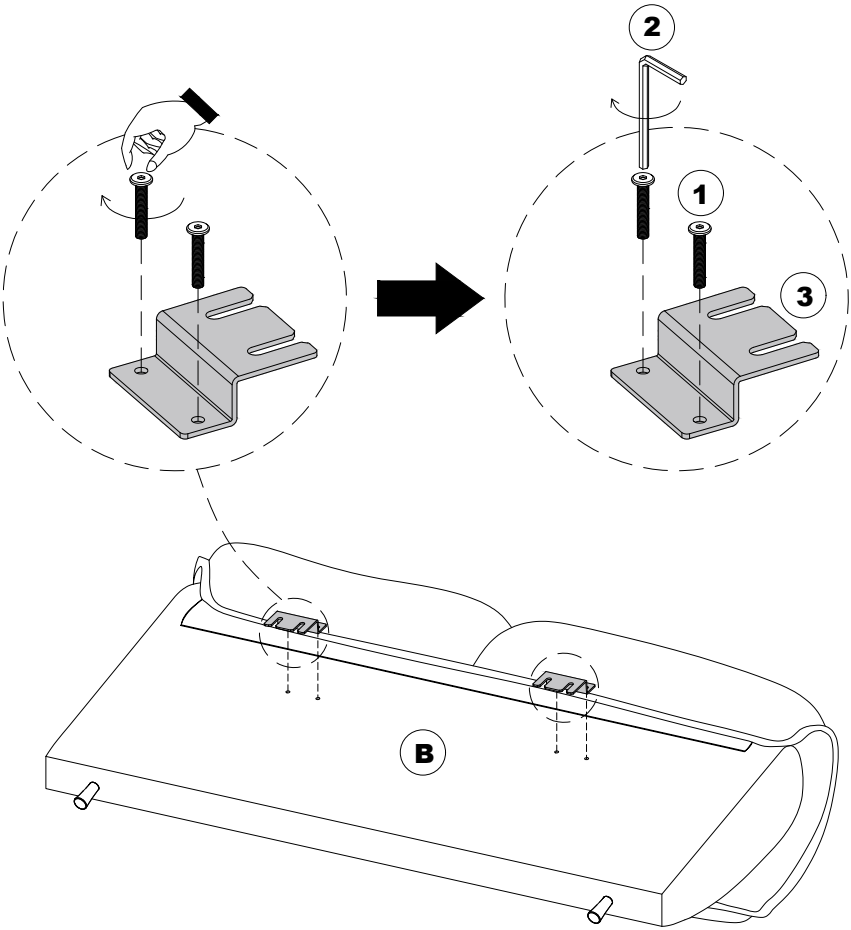

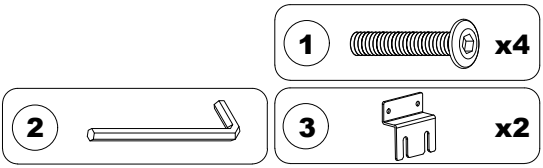

STEP 13

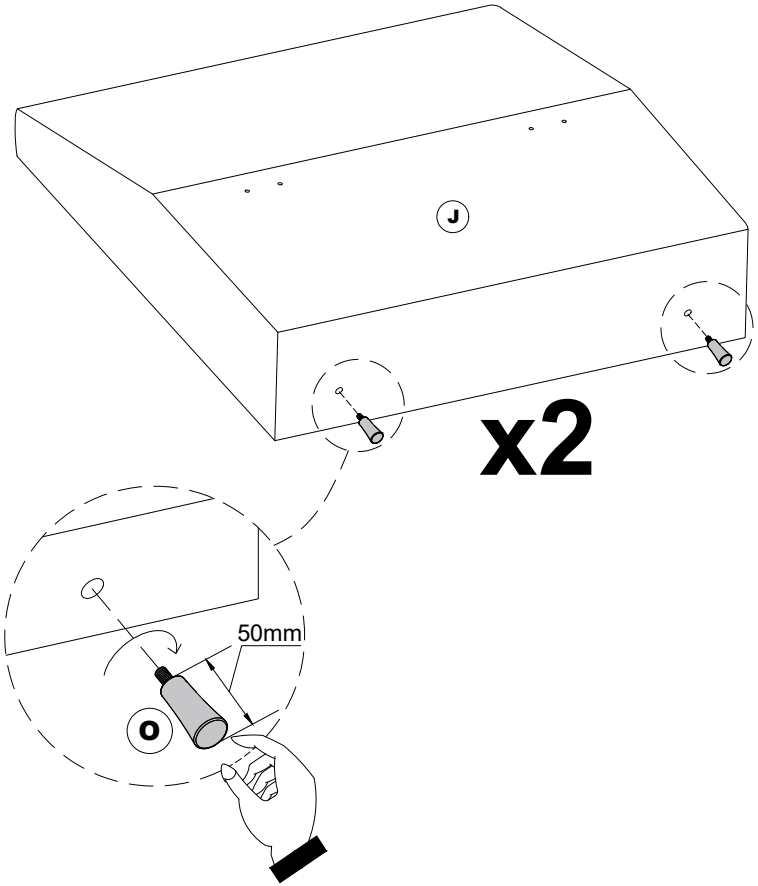

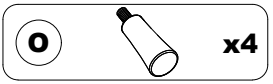

STEP 14

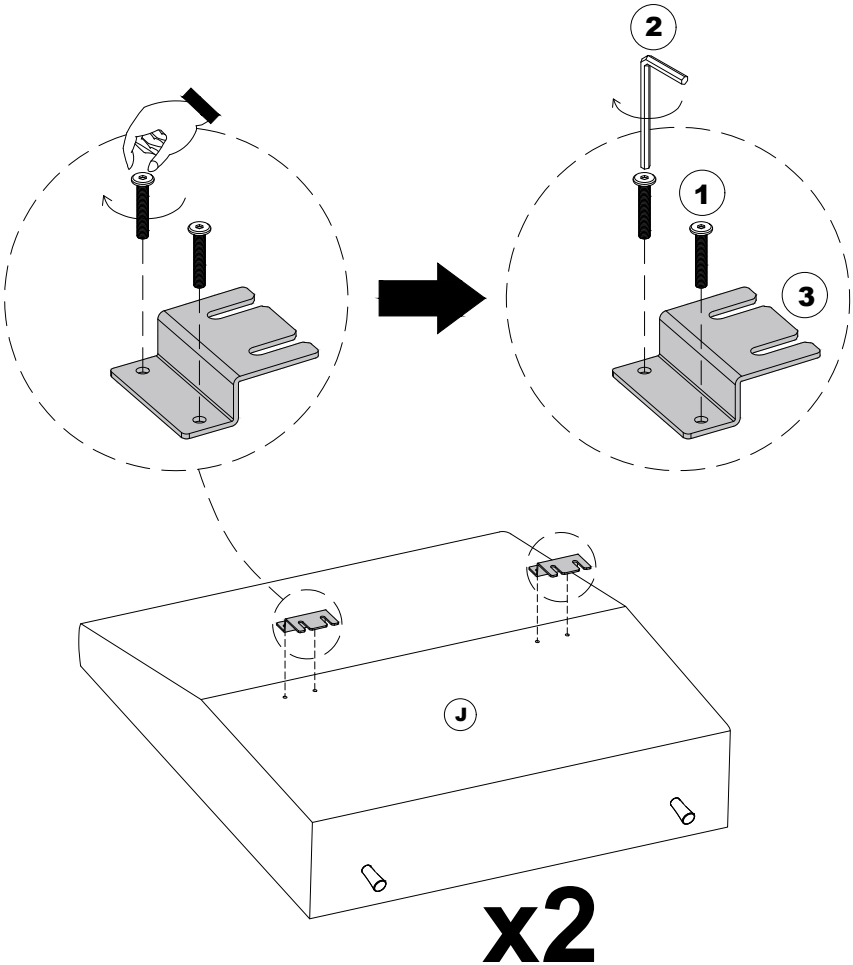

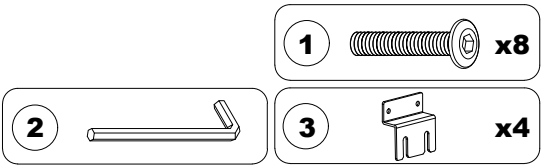

STEP 15

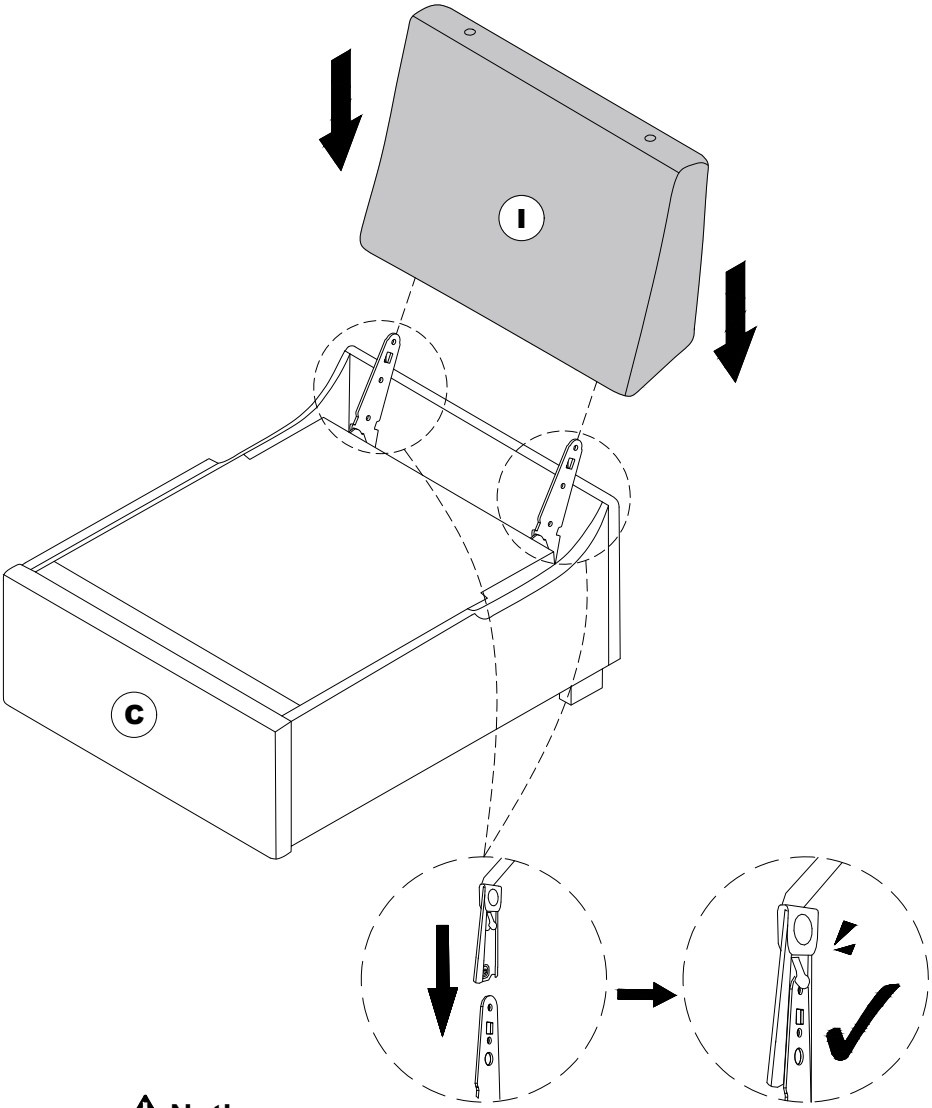

⚠ Notice

Align the buckle on the backrest with the socket on the seat cushion, then apply force simultaneously on both sides to press down on the top of the backrest for installation.

STEP 16

⚠ Notice

Attach the hook-and-loop fastener to the designated spot, avoid sticking it on the fabric.

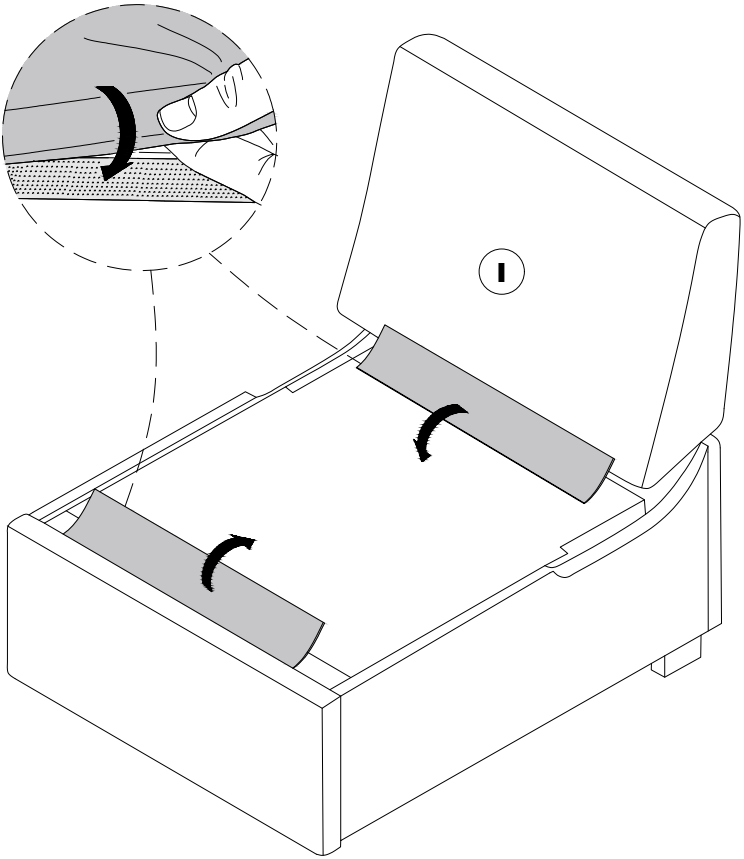

STEP 17

⚠ Notice

1. During installation, please align the screws and apply downward pressure on both sides simultaneously.
2. If installation is difficult, you may loosen the screws on part 3 and then tighten them after the installation is complete.

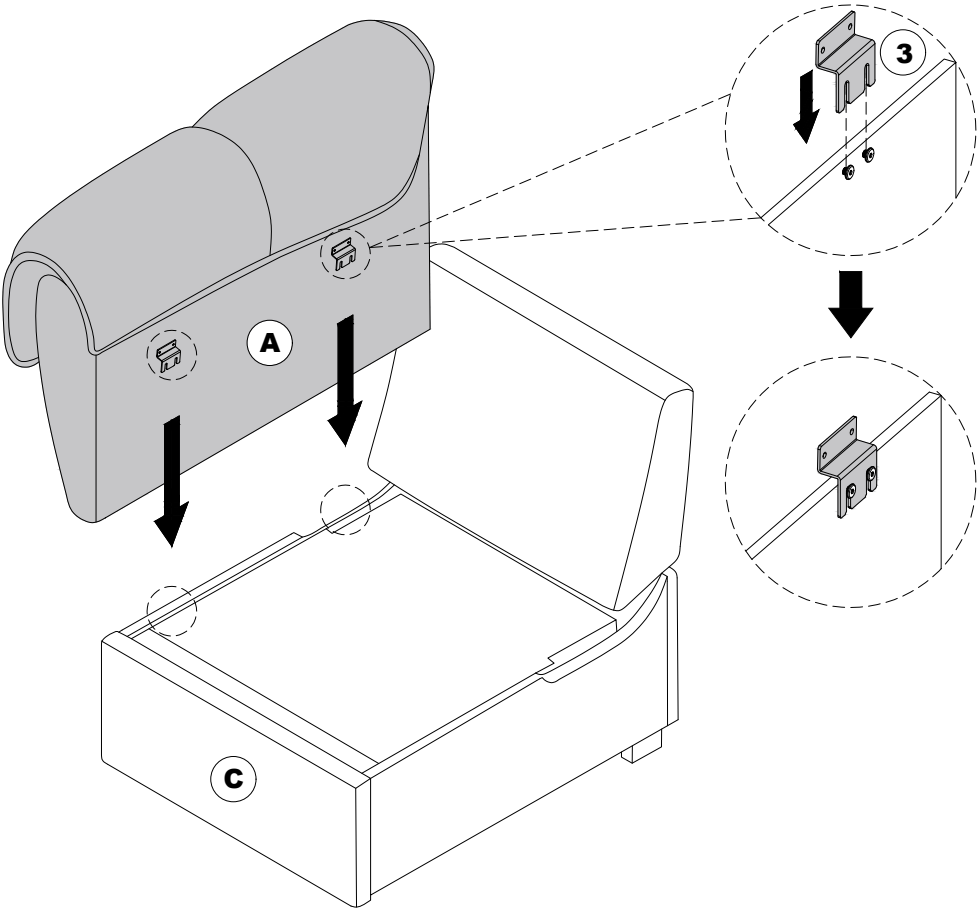

STEP 18

⚠ Notice

1. During installation, please align the screws and apply downward pressure on both sides simultaneously.
2. If installation is difficult, you may loosen the screws on part 3 and then tighten them after the installation is complete.

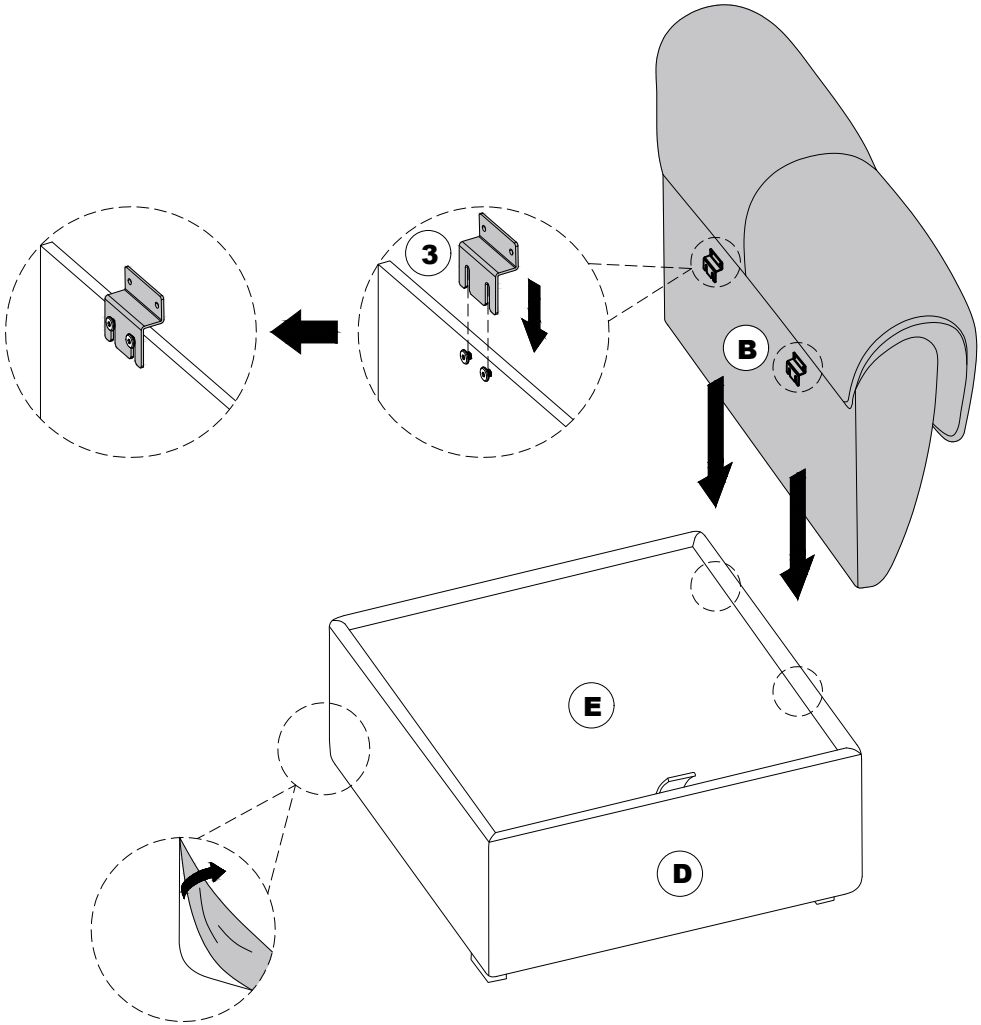

Detachable side

STEP 19

⚠ Notice

1.During installation, please align the screws and apply downward pressure on both sides simultaneously.
2.If installation is difficult, you may loosen the screws on part 3 and then tighten them after the installation is complete.

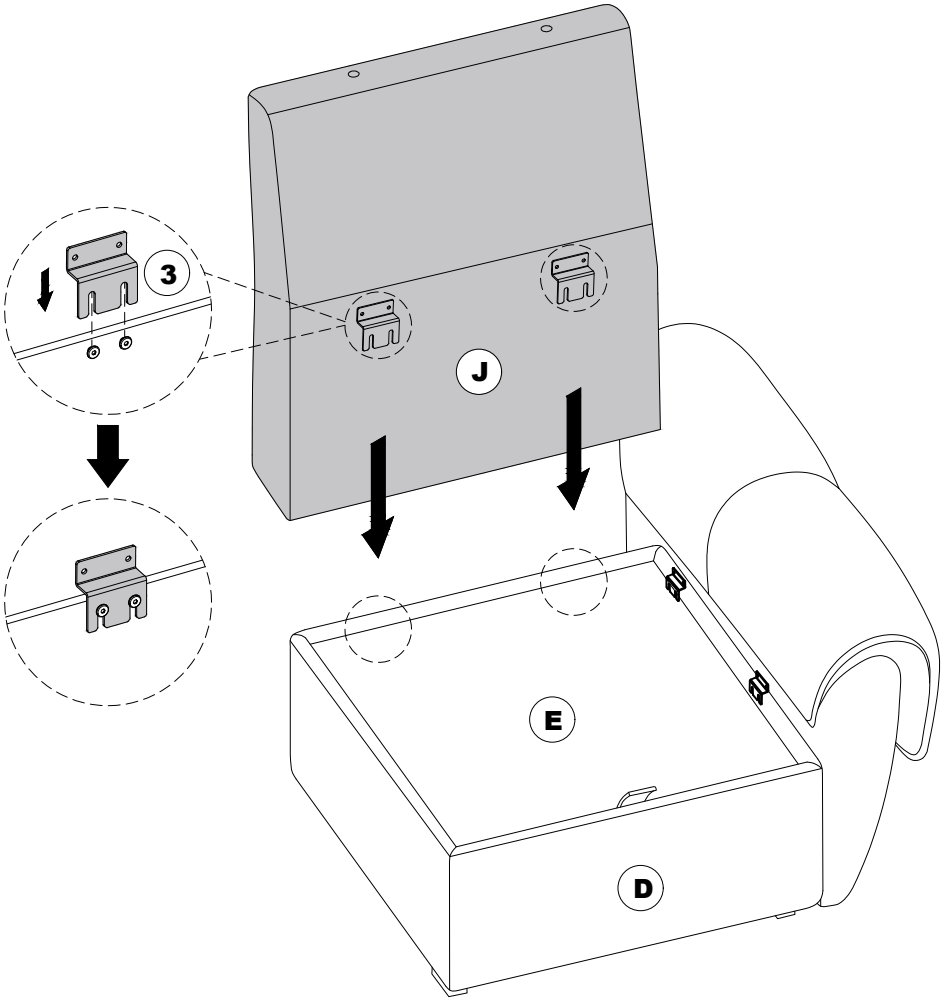

STEP 20

⚠ Notice

1.During installation, please align the screws and apply downward pressure on both sides simultaneously.
2.If installation is difficult, you may loosen the screws on part 3 and then tighten them after the installation is complete.

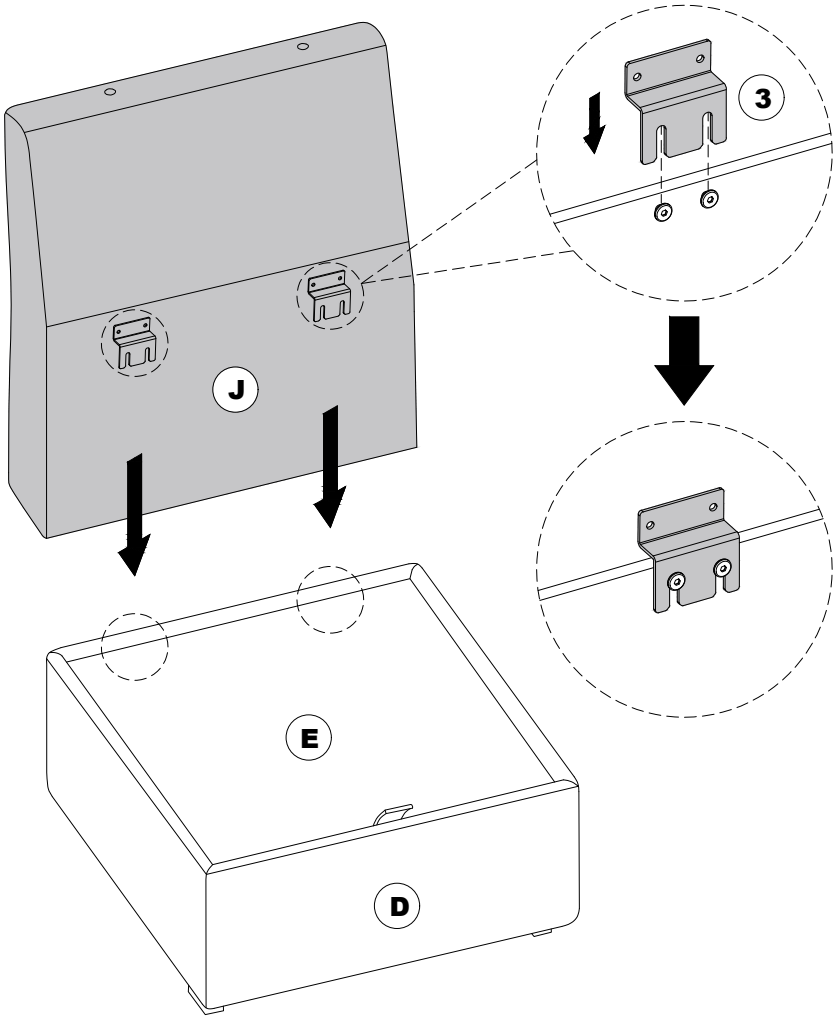

STEP 21

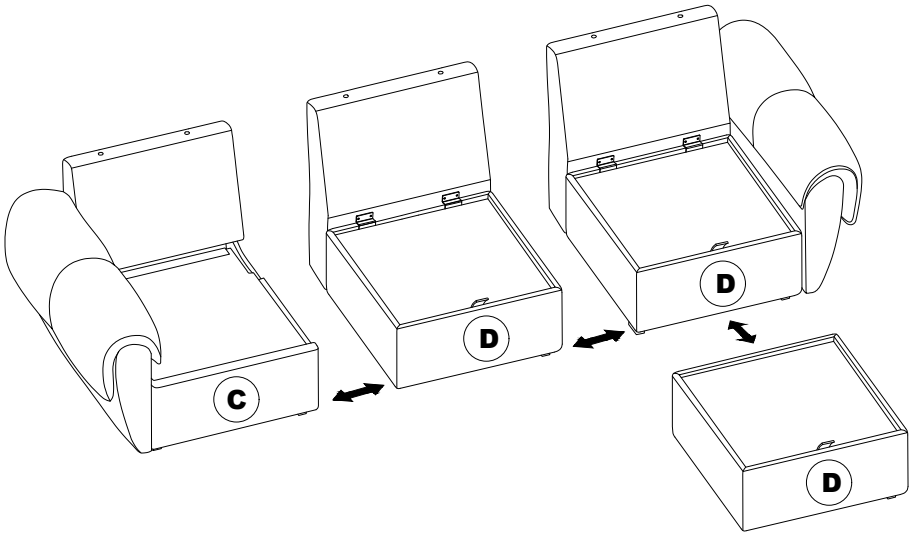

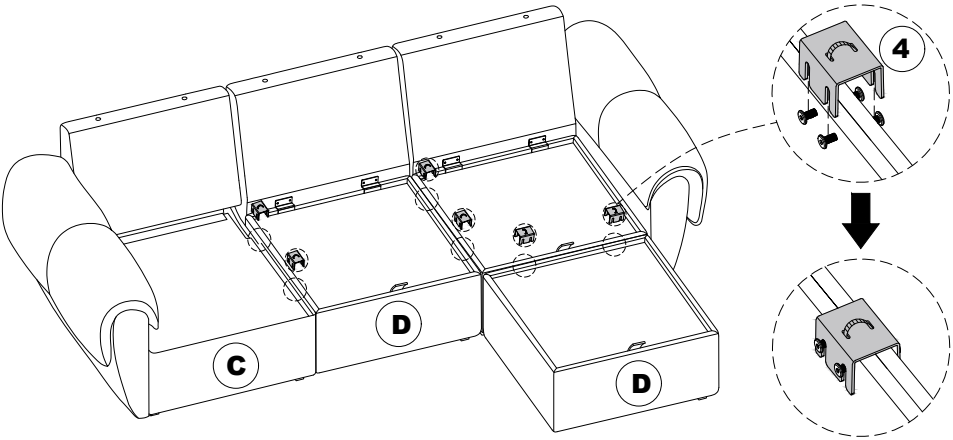

There are many ways to combine the product,
if you buy a combination with more ottoman modules,
please give priority to fixing the ottoman and sofa module

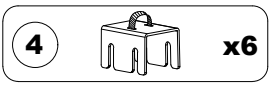

STEP 22

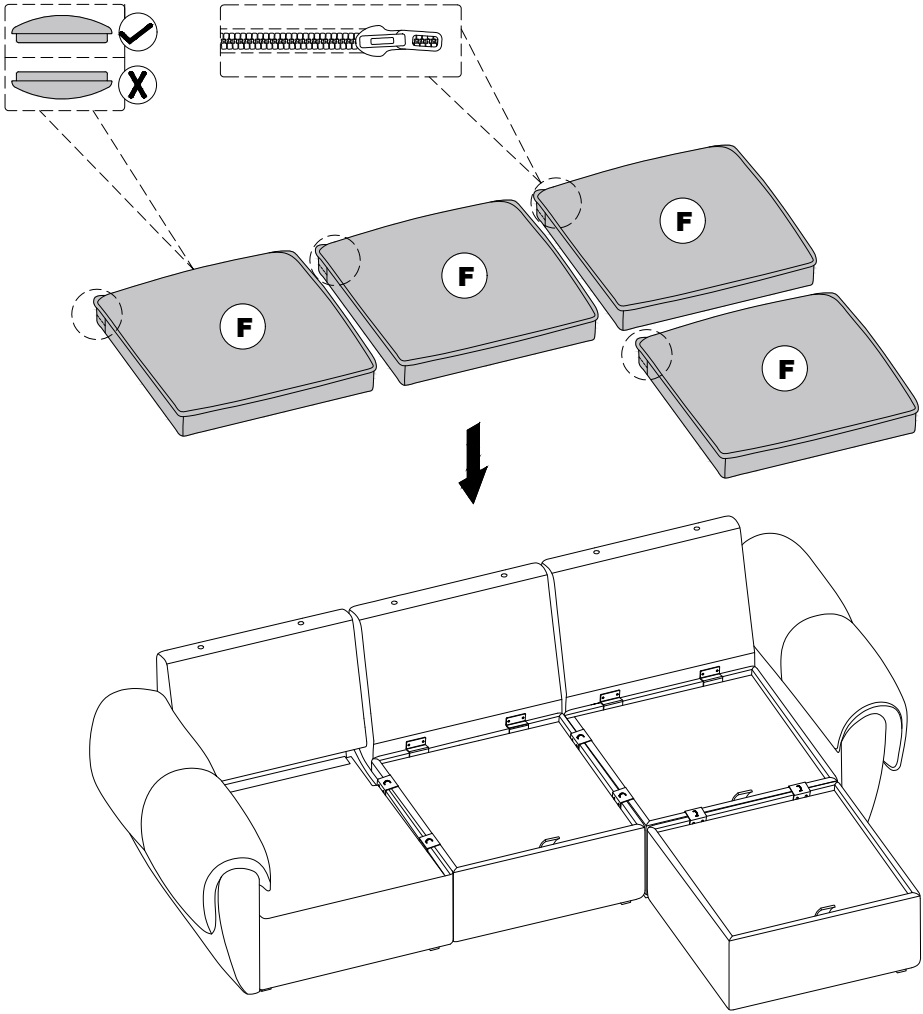

STEP 23

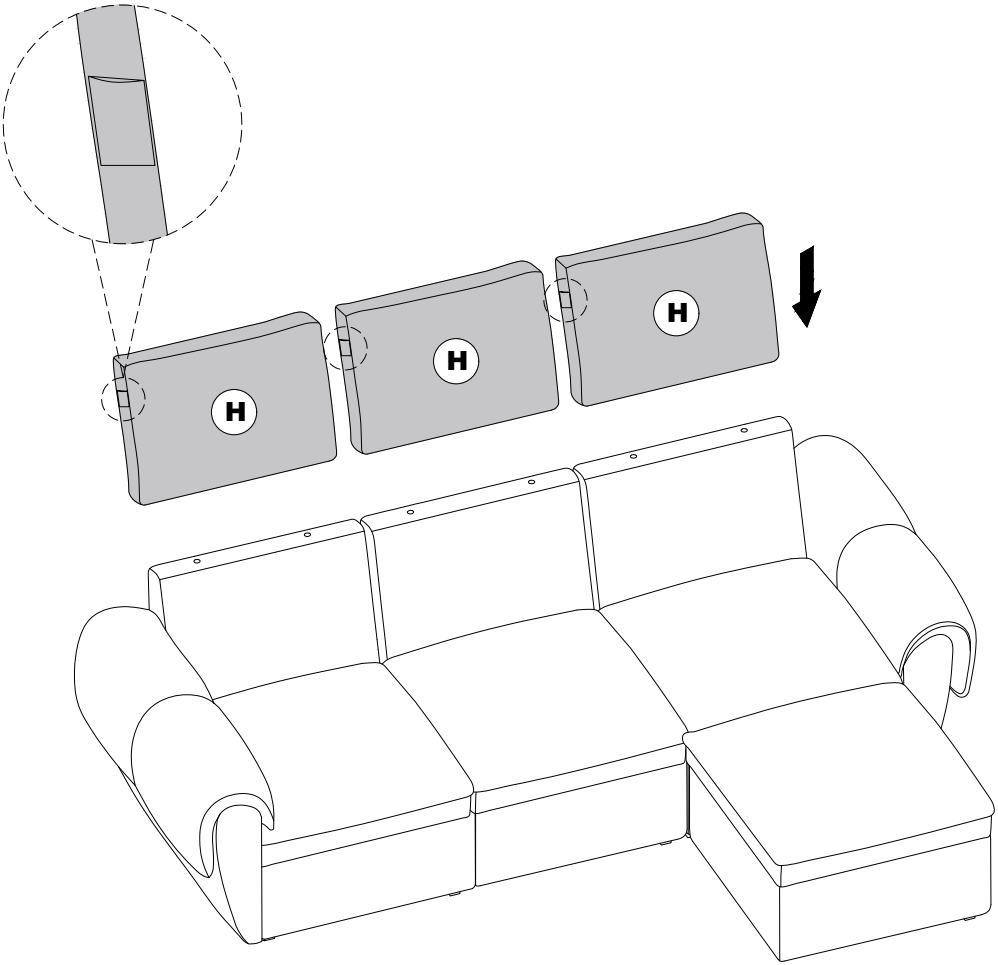

STEP 24

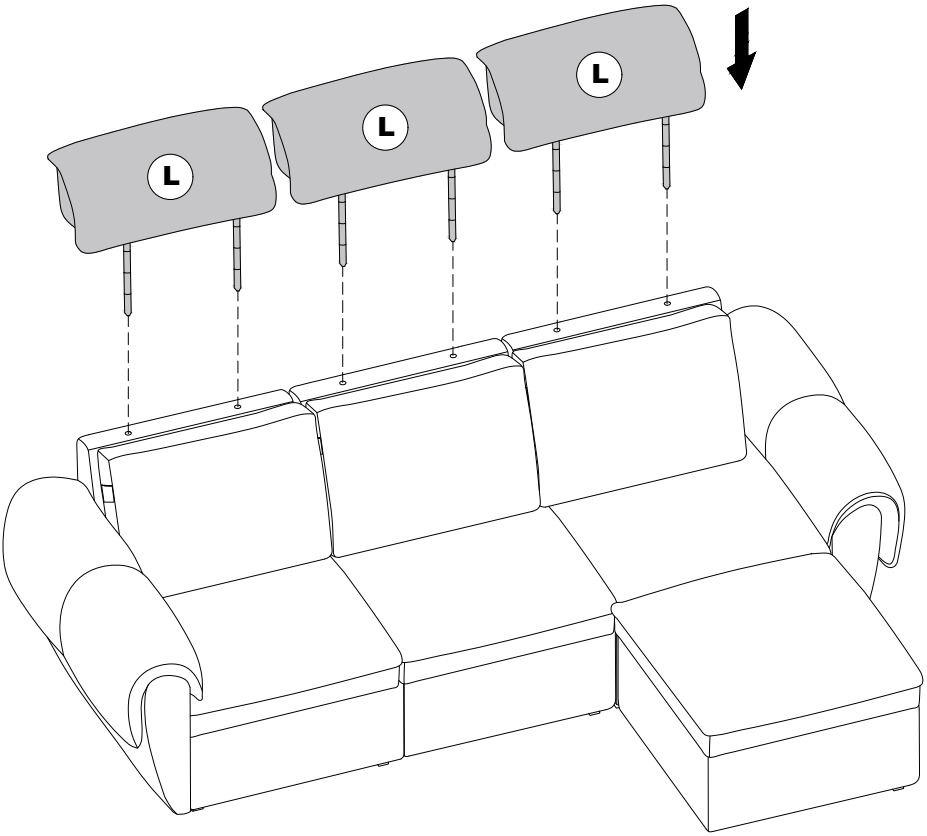

STEP 25

1. The height of the headrest can be adjusted up or down according to individual needs.
2. The headrest can be adjusted forward and rebounded to the limit position.

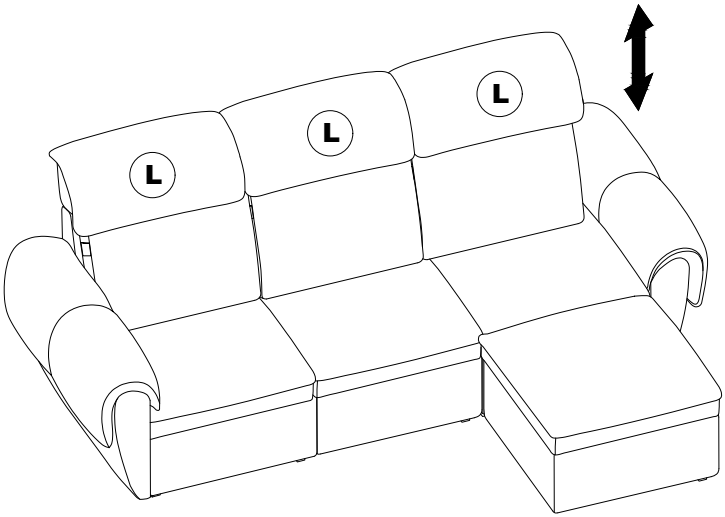

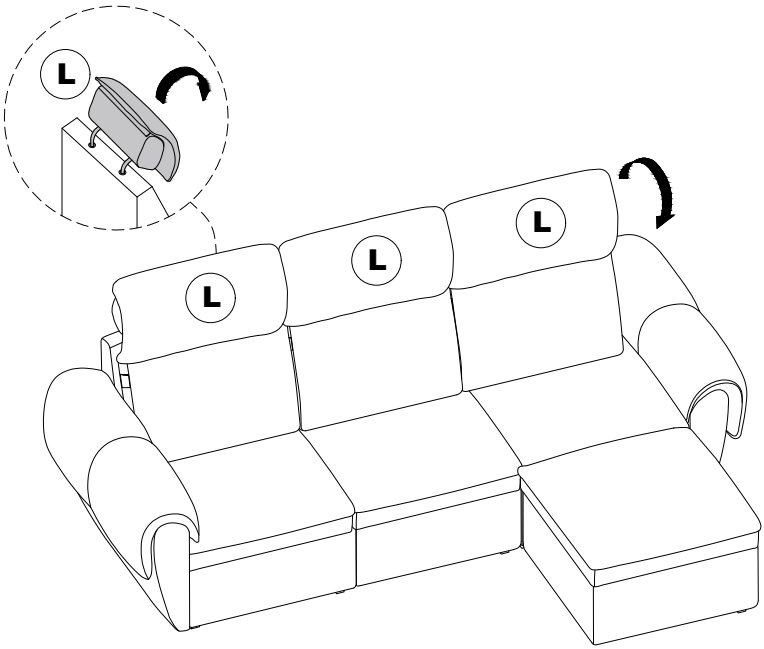

STEP 26

5

5

Notice

Please secure the anti-removal cover.

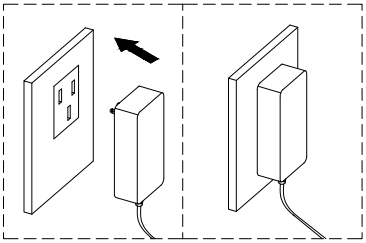

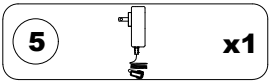

STEP 27

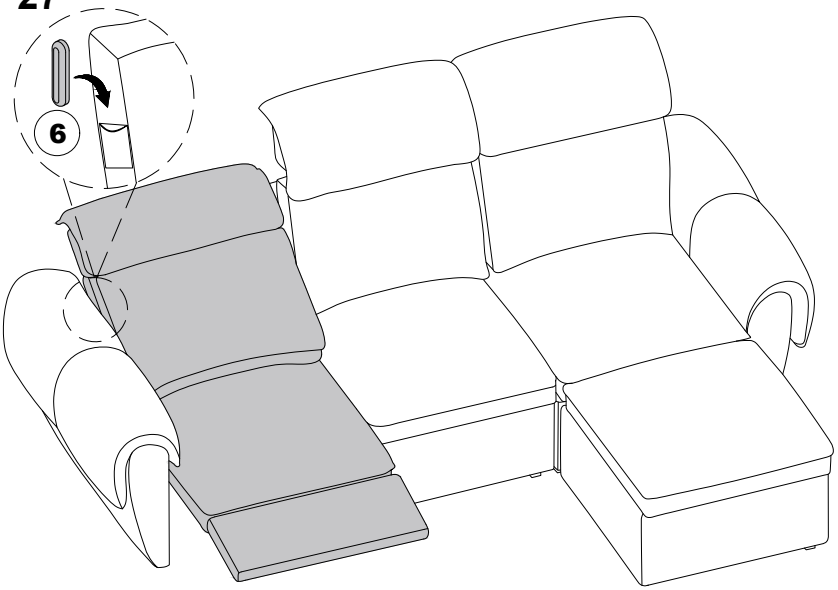

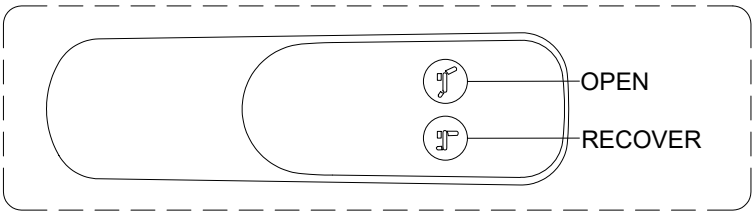

Pairing the Wireless Hand Controller with the Control Box
Note:Please install three AAA batteries before use.
Step 1: Power on the control box (connect the power cable according to the manual). The control box will enter pairing mode for 60 seconds. Note: If step 2 is not reached within 60 seconds, unplug the power, wait 60 seconds, and power on again (Step 1).
Step 2: Pick up the hand controller and press and hold both buttons for more than three seconds until you hear a 'click' sound from the control box, indicating successful pairing. Otherwise, repeat all the steps above. Note: If the remote is lost, replace it with a new one and repeat steps 1 and 2 above.
Note: Each remote control can only be paired with one electric sofa module.

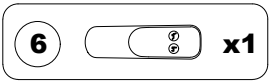

STEP 28

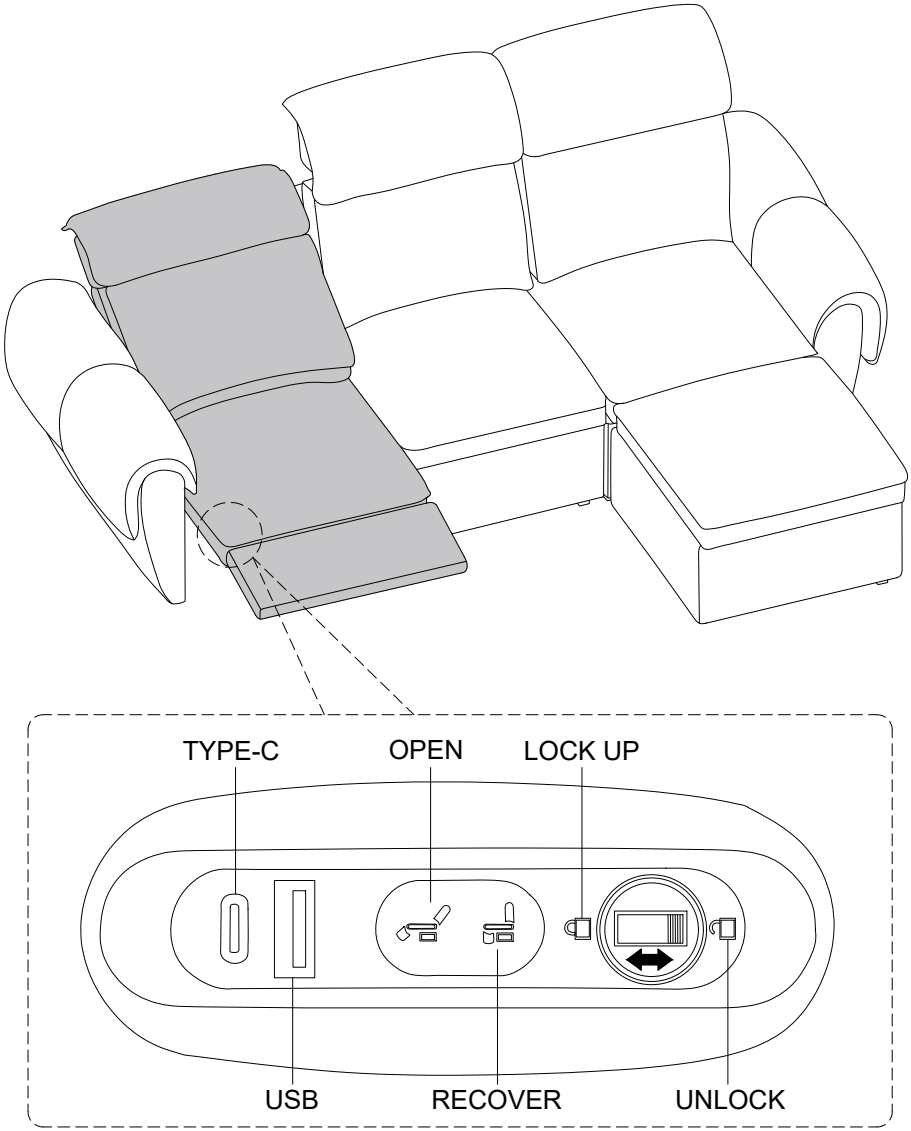

Notice

There is a functional button located beneath the electric reclining chair cushion, which is used to control the sofa's operation. It is not advisable to use the USB and Type-C charging interfaces for an extended period.

STEP 29

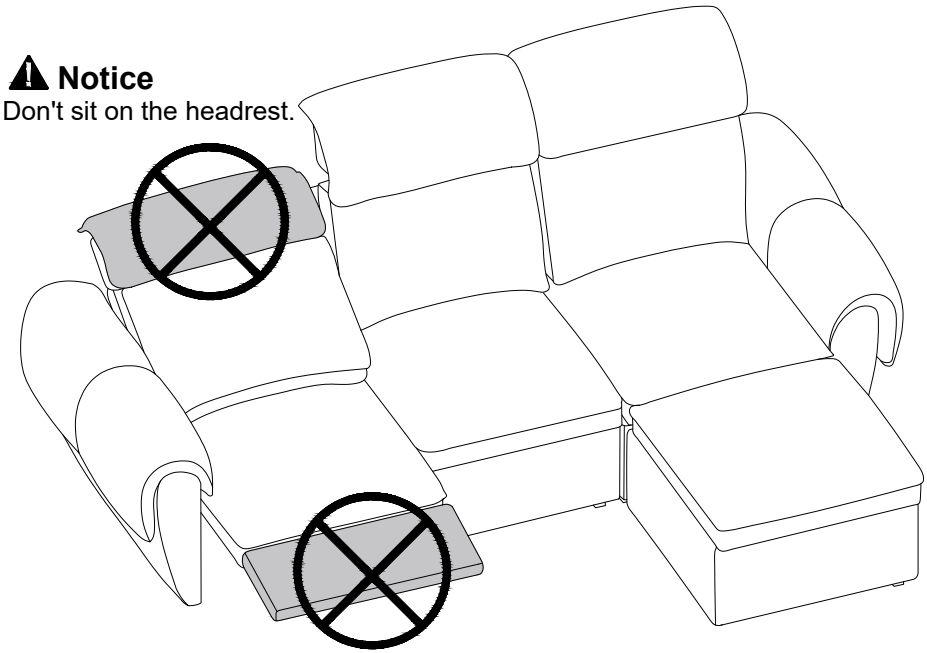
Notice
Don't sit on the headrest.
Notice
Don't sit on the foot rest.

Instructions for disassembly, cleaning and replacement of fabric covers

1. Design features: easy to disassemble and change and wash at will

The headrest, backrest, armrest cover and cushion cover of this sofa are removable and secured with concealed durable zippers or high-strength Velcro. This design allows you to easily remove the cover for cleaning, or replace it with a different color cover at any time to instantly refresh your living room.

2. Disassembly Steps (Be sure to read before operating)

Pinpoint the connection: The cloth cover attachment (zipper or Velcro) is usually located on the edge or hidden part of the cloth cover.
Gentle operation: When disassembling, please hold the connection of the cloth cover and apply force smoothly along the direction of the opening to avoid damage to the fabric or connectors caused by raw pulling and pulling.
Proper placement of the inner core: After removing the fabric cover, please place the sponge or down core on a dry and flat place to avoid scratches from sharp objects.

3. Cleaning Guidelines:

This sofa fabric can be machine washed, hand washed, dry cleaned,
Machine wash: Use a laundry bag, select the gentle mode (water temperature does not exceed 30°C), and use a mild detergent. To avoid color difference, wash separately and wash from the wrong side;
Hand washing: It is recommended to add neutral detergent to cold water, gently press and rub with your hands, and press dry the water after washing (do not wring);
Dry cleaning: Please send to a professional laundry for processing.
Drying: After cleaning, please tidy up the cloth cover and place it in a cool and ventilated place to dry naturally to avoid fading or hardening caused by direct exposure to the sun.

4. Change the cover: Create an exclusive style

You can change your sofa to a matching cover of the same series in different colors or patterns according to the seasons or personal preference (to ensure the best fit, it is recommended to purchase the official size cover).
Installation: Put the dried or new cloth cover back onto the appropriate area, making sure the inner core is completely wrapped, and then close the zipper or Velcro (refer to the instruction manual).
Tip: When installing larger cloth covers such as cushions and armrests, the inner core can be folded or pressed appropriately to make it easier to put on the cloth cover.

STEP 1

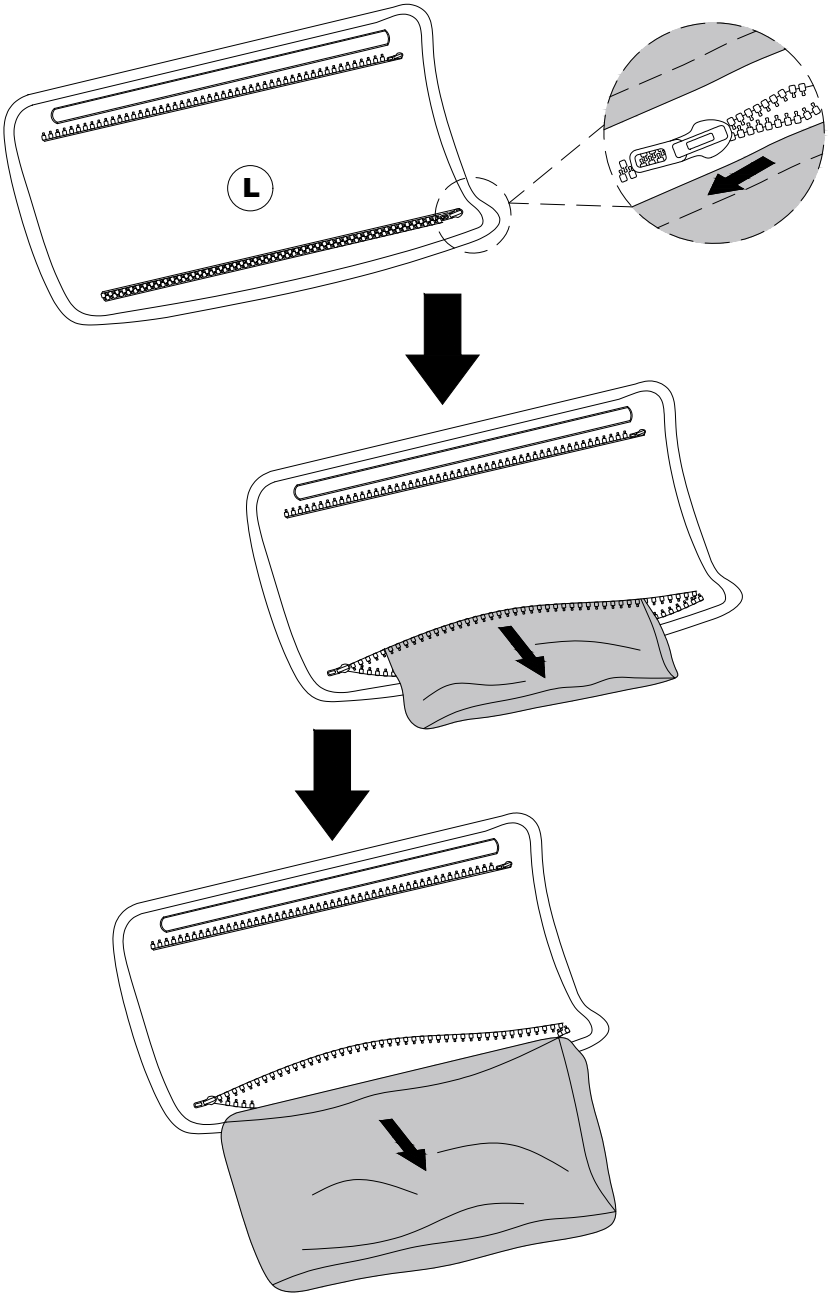

STEP 2

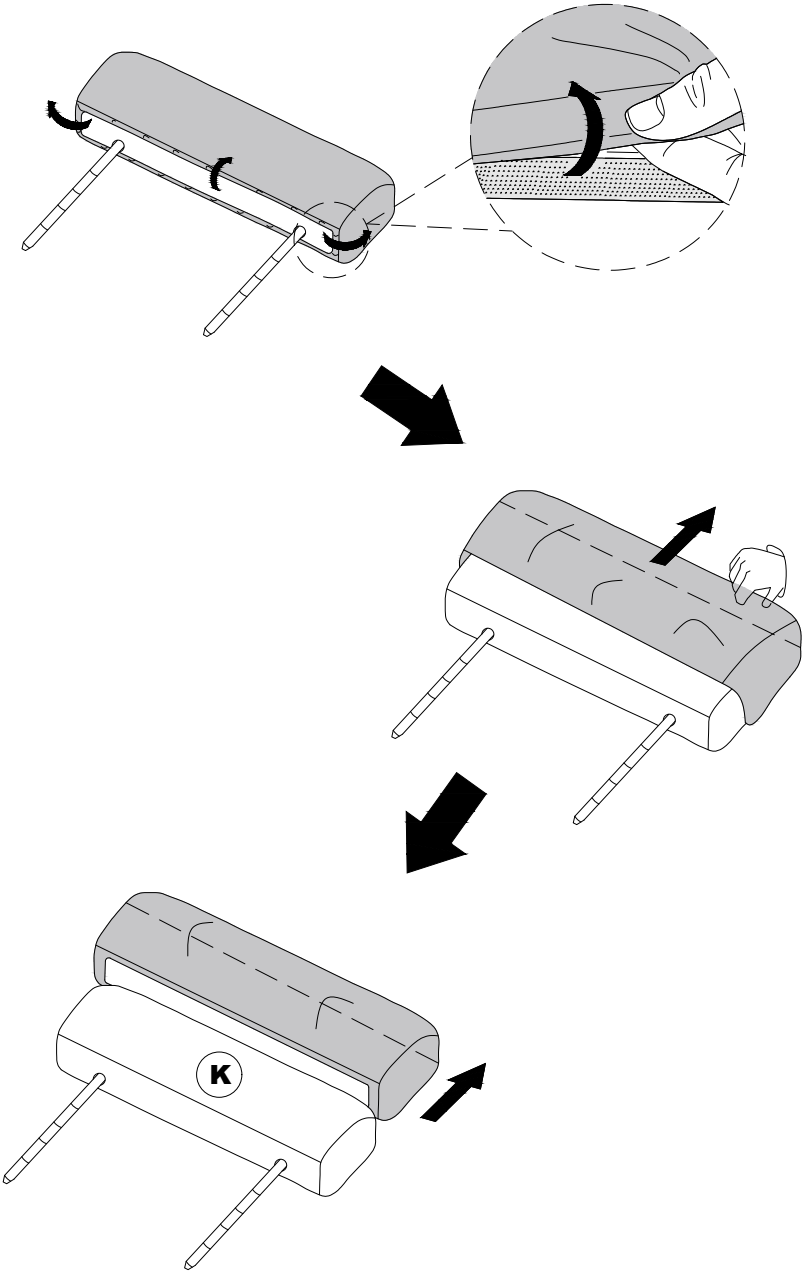

STEP 3

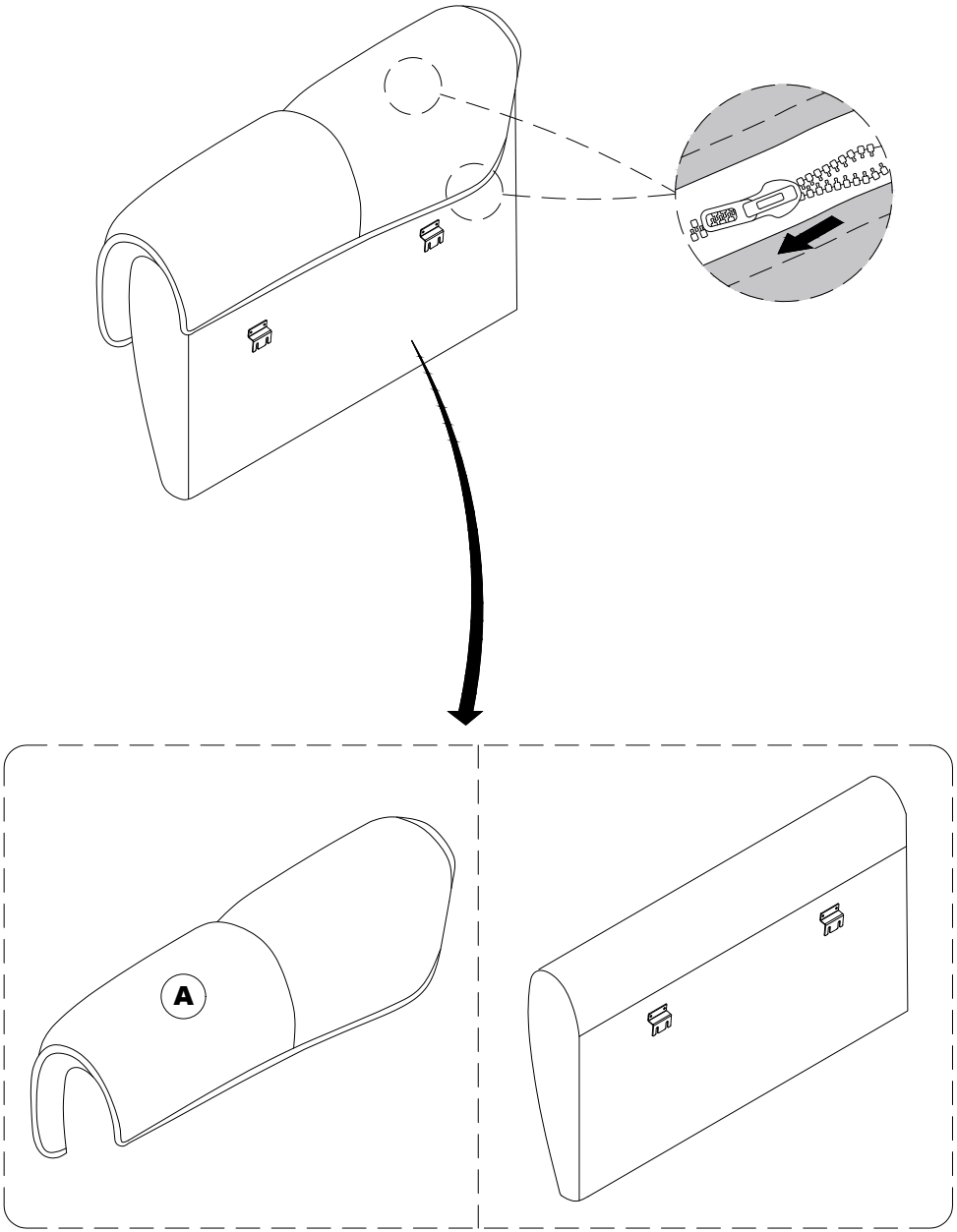

STEP 4

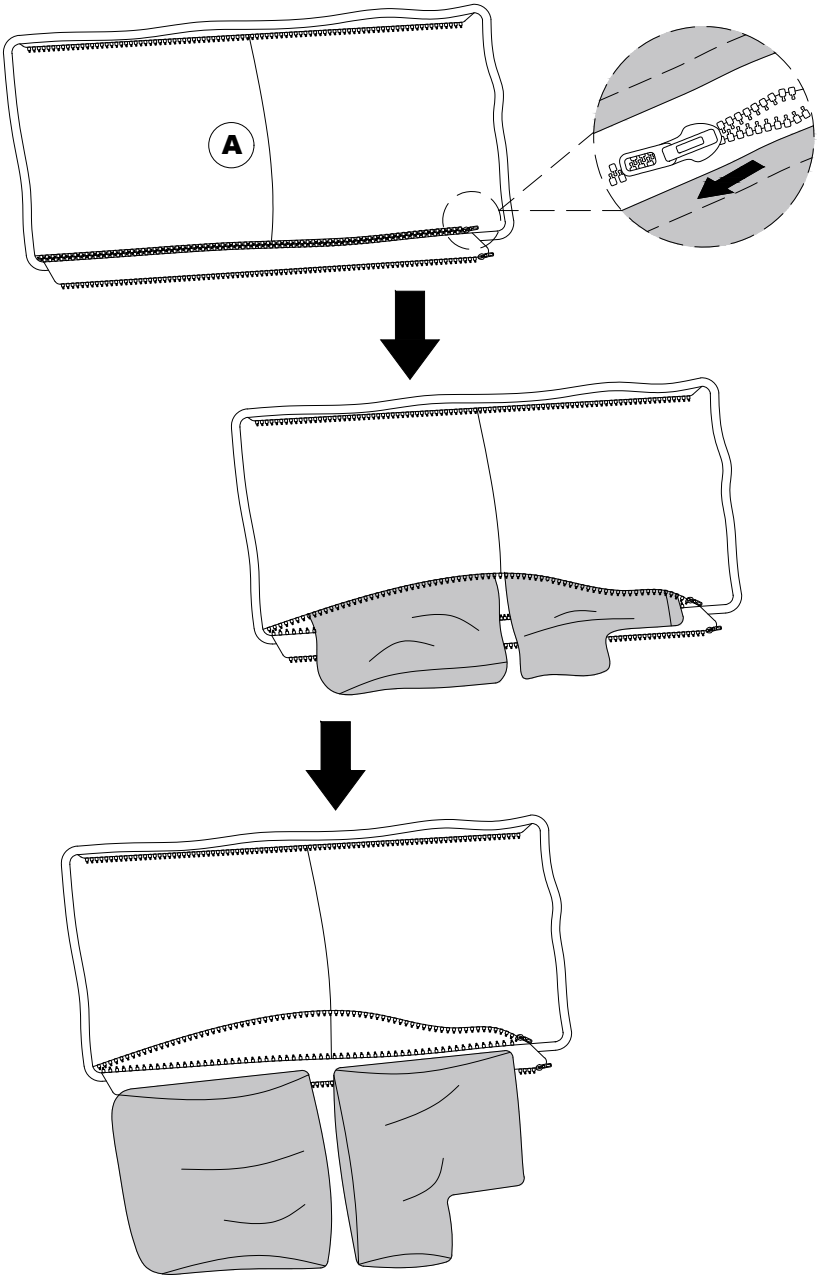

STEP 5

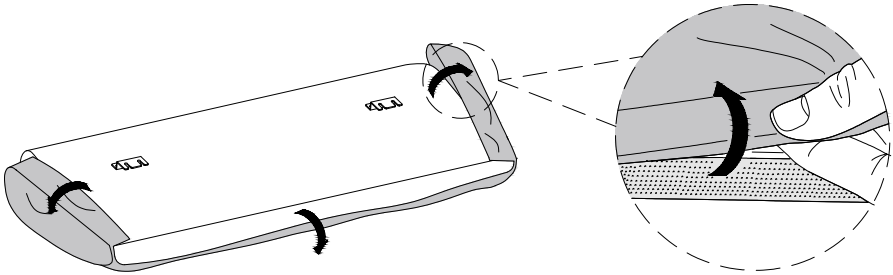

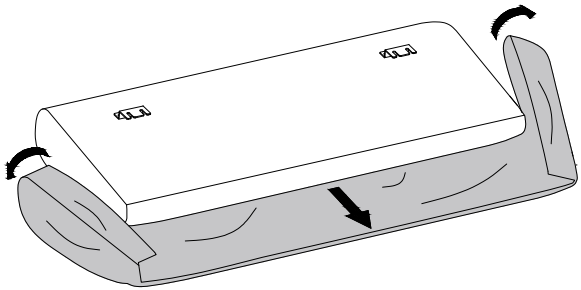

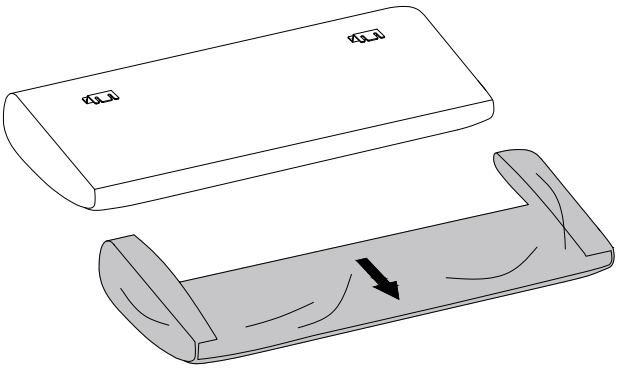

STEP 6

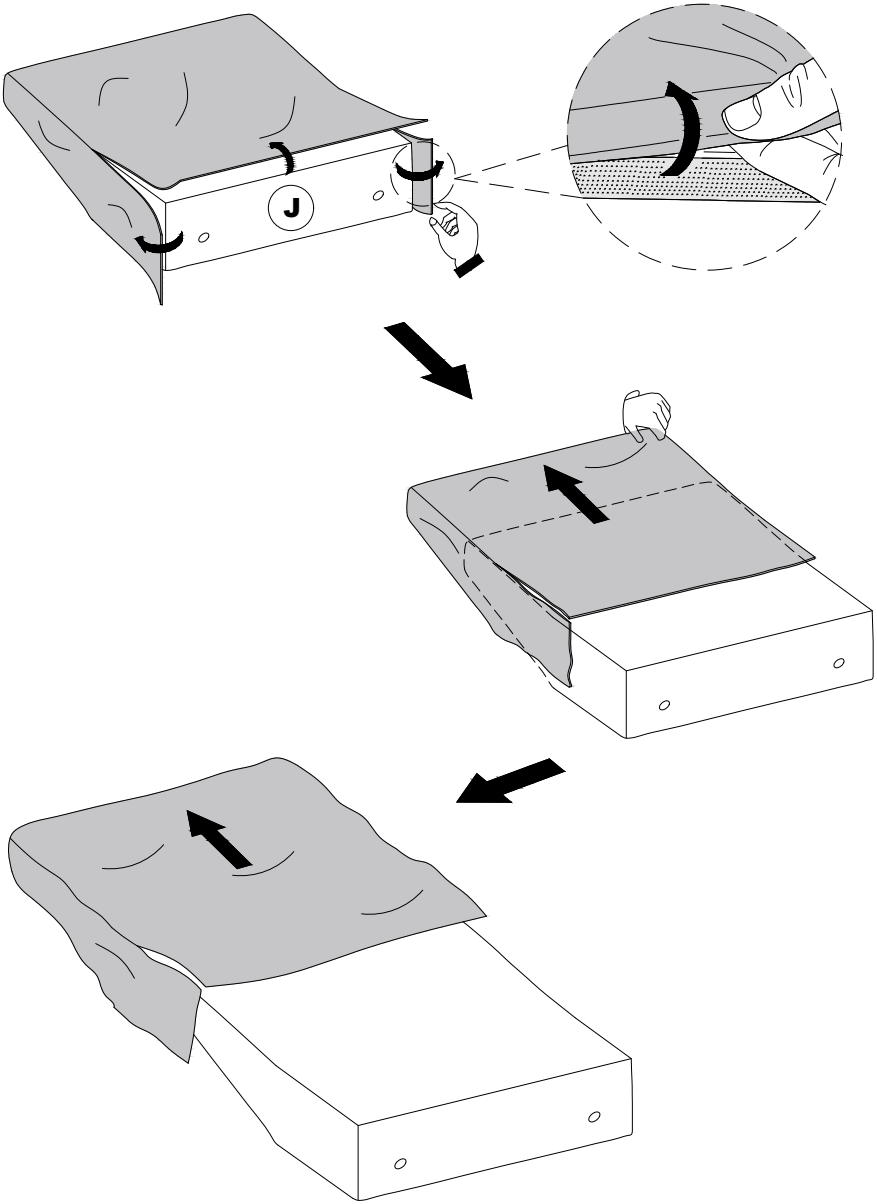

STEP 7

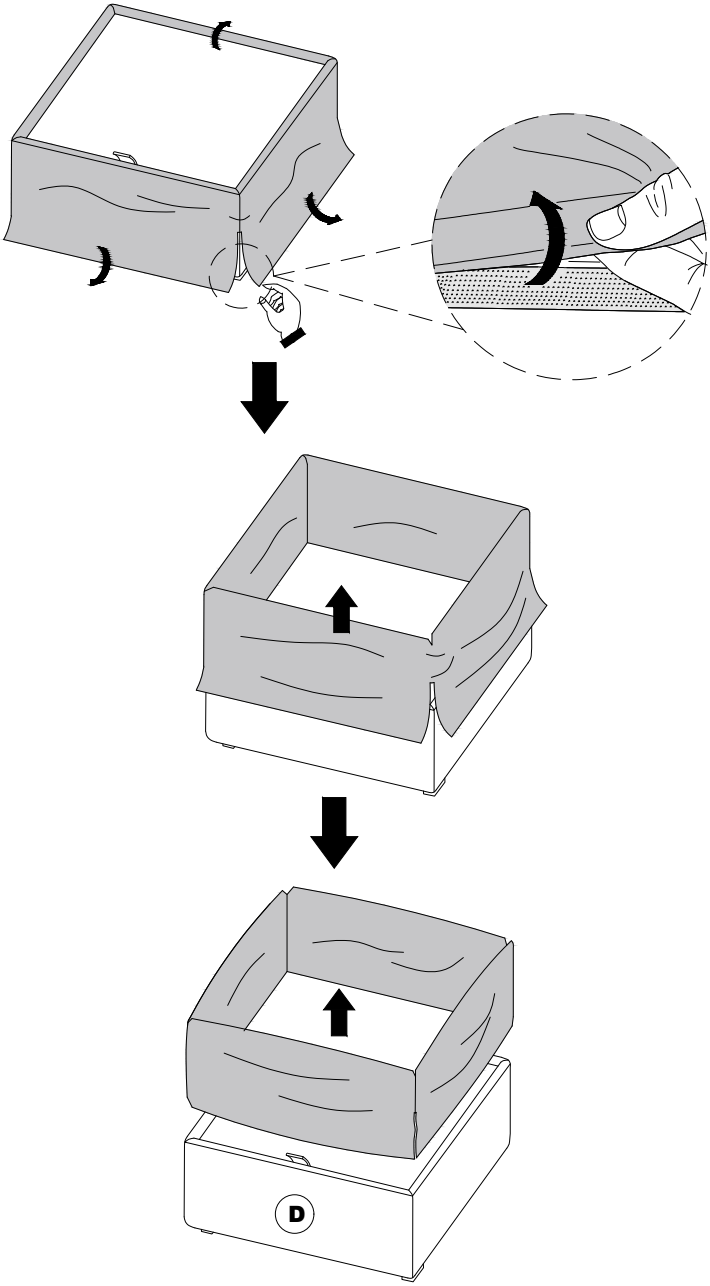

STEP 8

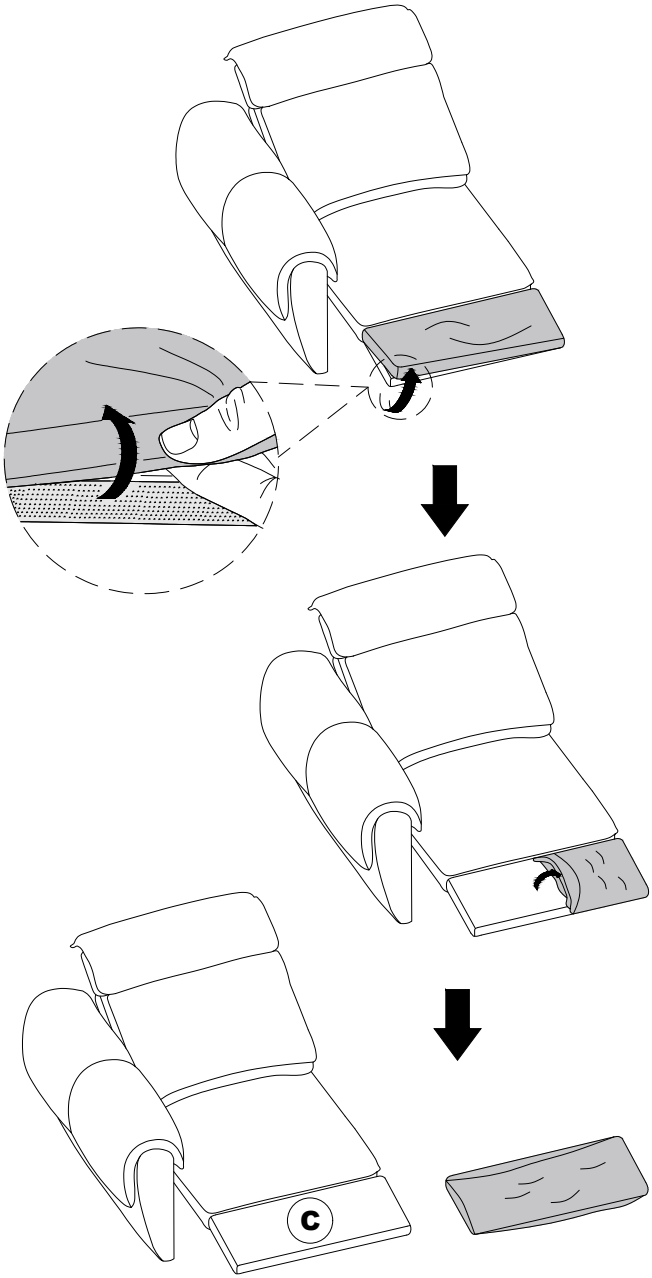

STEP 9

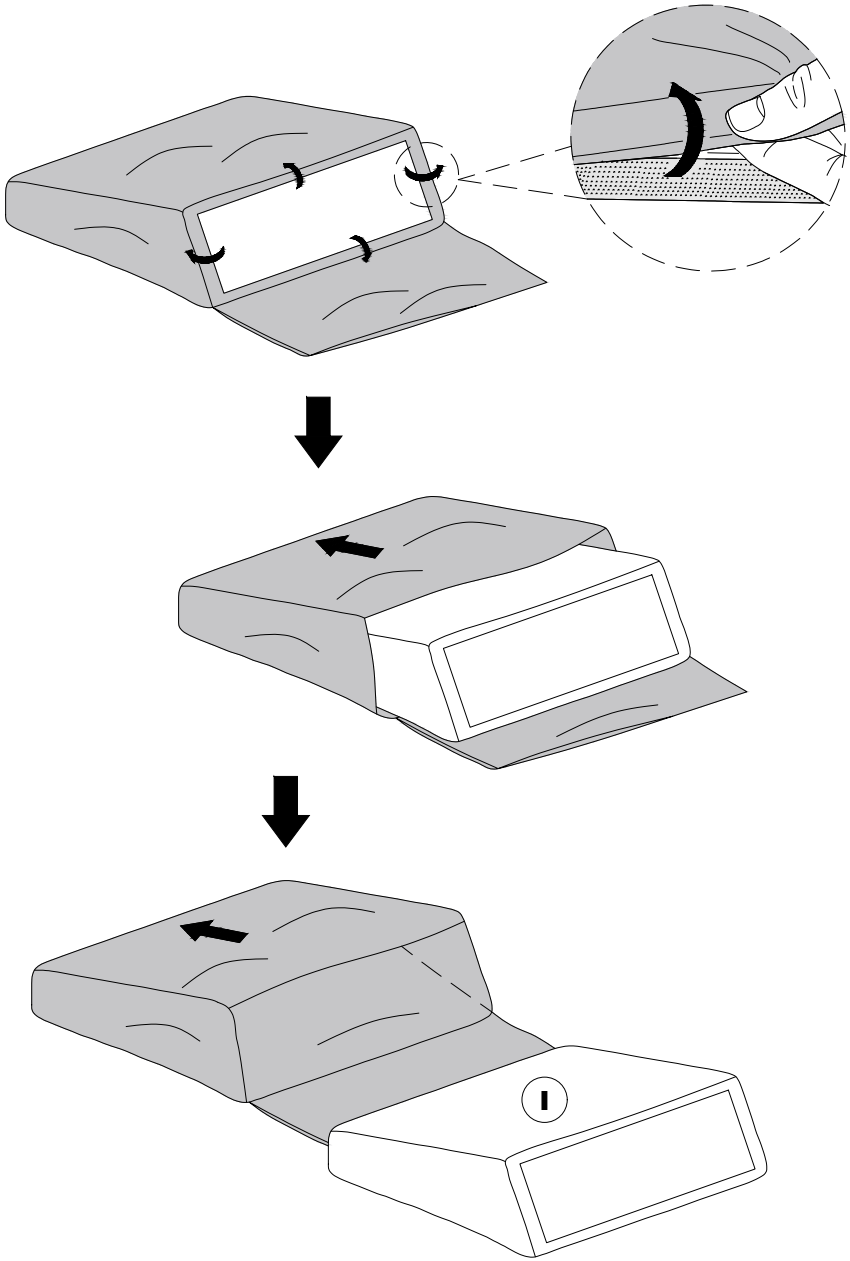

STEP 10

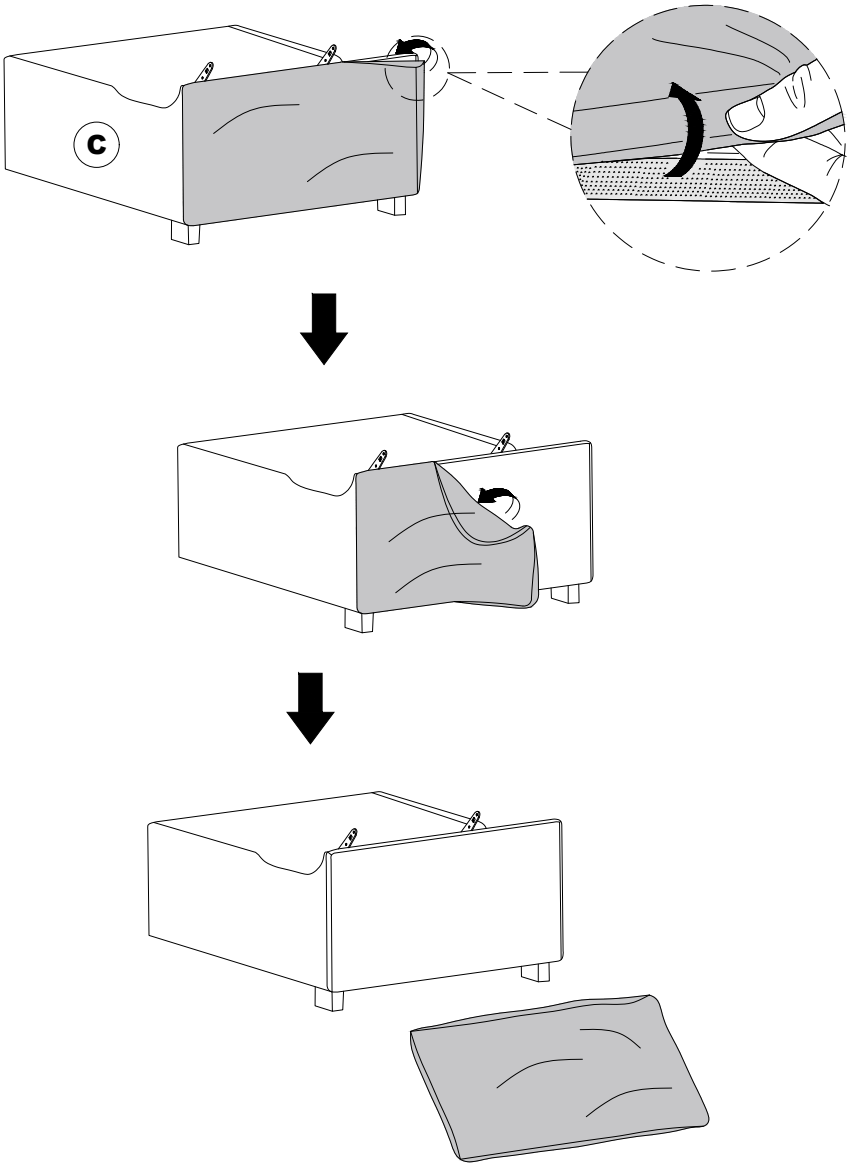

Leather sofa maintenance and cleaning

Timely handling of stains: If stains occur on the leather sofa, they should be addressed as soon as possible. Gently wipe the surface of the leather sofa with a clean, soft cloth to remove dust and small particles. For liquid stains, first gently press with clean absorbent paper to soak up excess liquid, and then proceed with cleaning. Do not rub vigorously to avoid damaging the leather.

Maintenance and Cleaning of Fabric Sofas

The vacuuming method and tapping method: Regularly use a vacuum cleaner to clean fabric sofas, especially in areas where dust tends to accumulate, such as the seams and armrests. It is recommended to use a flat nozzle and medium suction power, avoiding the use of a brush and high suction power to prevent damage to the fabric threads. For deep-seated dust in the sofa, a towel sprayed with alcohol can be laid on the sofa, and tools can be used to tap, adhering the dust to the damp towel, and finally, a hairdryer can be used to dry the sofa.

Maintenance methods for fabric and leather sofas

Avoid direct sunlight: Leather sofas exposed to sunlight for extended periods can lead to fading, hardening, and even cracking. Direct sunlight can cause the fabric to harden and become brittle, affecting its color and even leading to fading or discoloration. The sofa should be placed away from windows and direct sunlight, and curtains or blinds can be used to block sunlight.

Maintain appropriate humidity: Leather is sensitive to environmental humidity; excessively dry conditions can cause the leather to harden and crack, while overly humid conditions can promote mold growth. The ideal indoor humidity should be maintained between 40% and 60%. A humidifier can be used for adjustment, but the vapor from the humidifier should not come into direct contact with the leather. For fabric sofas, it is essential to ensure proper air circulation around the sofa to avoid prolonged dampness or exposure to high temperatures, which can lead to deformation and fading of the fabric.

Avoid hard objects from scratching: In daily use, avoid sharp objects from directly contacting the sofa fabric to prevent scratches.

The aforementioned method can effectively extend the lifespan of the sofa while maintaining its aesthetic appeal and comfort.

Warranties

We stand by our furniture with a one-year warranty that covers defects in materials and workmanship, starting on the date of delivery. If you experience issues with your Aliving piece, please let our team know. We will organize replacement parts, repairs, and,in necessary cases, complete replacements.
Please note that our warranties are non-transferable, and cannot be extended to re-sold items. Warranties are only valid when products are used for their intended purpose and exhibit normal use.
Defects or damage resulting from the following are not covered by Aliving's one-year warranty:

- Negligence
- Misuse
- Accidents
- Abnormal use
- Modifications
- Commercial purposes
- Pets
- Inproper Cleaning

ALIVING

If a part is missing or damaged

please feel free to contact us via custom service email

support@aliving.com

We will gladly ship your replacement parts FREE of charge

To solve your problem faster

please provide your order number when contacting us

Scan the QR code
to visit Aliving.com