Assembly Instructions

PWS-EC4099-CO

47.25 in. CHARCOAL OAK WOOD TV STAND

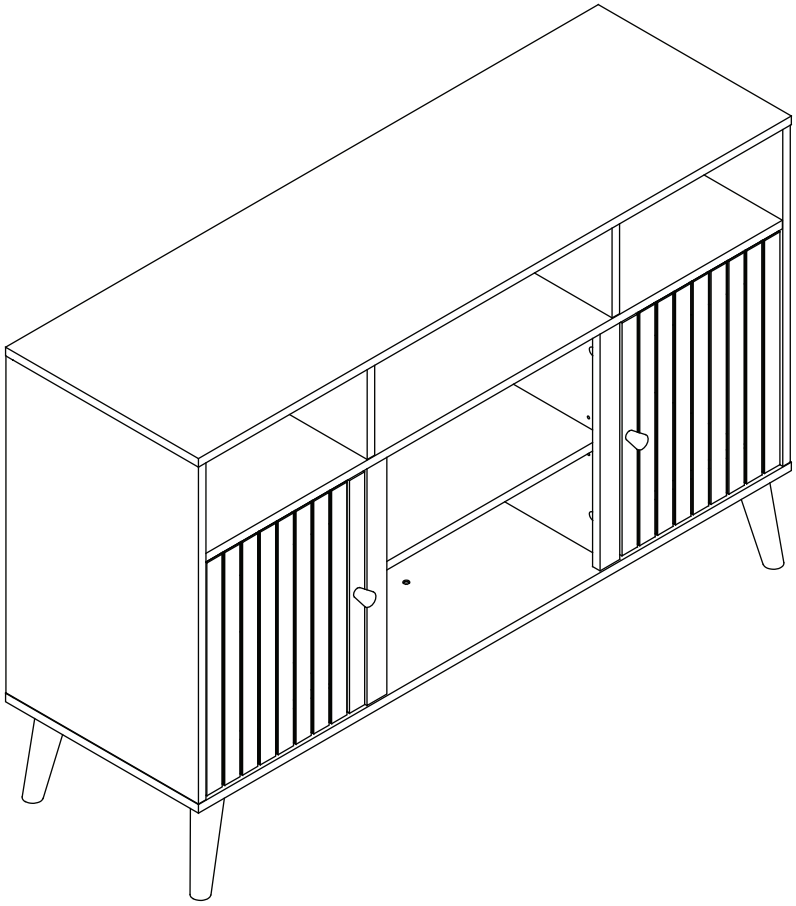

THIS INSTRUCTION BOOKLET CONTAINS **IMPORTANT** SAFETY INFORMATION. PLEASE READ AND KEEP FOR FUTURE REFERENCE.

Do Not Return This Product!
Contact our customer service team for help first.

Monday-Friday 9am - 5pm CST
Visit: support@cenports.com

WARNING

- Unit can tip over causing severe injury or death.
- Anchor uni□o stud in wall (ifinstructed to).
- Do Not allow children to climb on unit.
- Put heavy items on lower shelves or drawers.

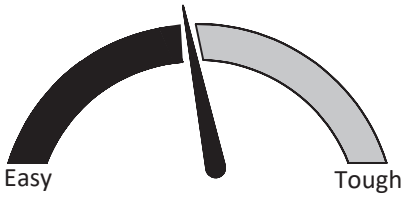

Assembly Difficulty Meter

Contact Us!

Do NOT return this product!

Contact our friendly customer service team first for help

Visit support@cenports.com

Helpful Hints

PEOPLE NEEDED FOR ASSEMBLY: **1-2**
ESTIMATED ASSEMBLY TIME: **30 MINUTE**

- Open your item in the area you plan to keep it to avoid excessive heavy lifting.

- Identify, sort and count the parts before attempting assembly.

- Compression dowels are lightly tapped in with a hammer.

- Slides are labeled with a **R** (right) and **L** (left) for proper placement.

- Make sure to always face the point on the top of the Cam Lock towards the outer edge.

- Use all the nails provided for the back panel and spread them out equally.

- Back panel must be used to make sure your unit is sturdy.

- Do NOT use harsh chemicals or abrasive cleaners on this item.

- Never push, pull, or drag your furniture.

Before You Start

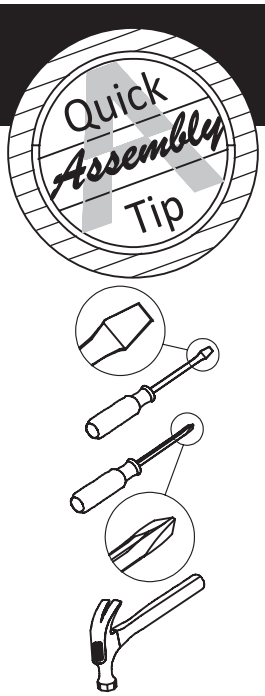

- ✓ Read through each step carefully and follow the proper order
- ✓ Separate and count all your parts and hardware
- ✓ Give yourself enough room for the assembly process
- ✓ Have the following tools: Flat Head Screwdriver, #2 Phillips Head Screwdriver and Hammer
- ✓ Caution: If using a power drill or power screwdriver for screwing, please be aware to slow down and stop when screw is tight. Failure to do so may result in stripping the screw.

Cam Lock Fastening System

This Cam Lock Fastening System will be used throughout the assembly process.

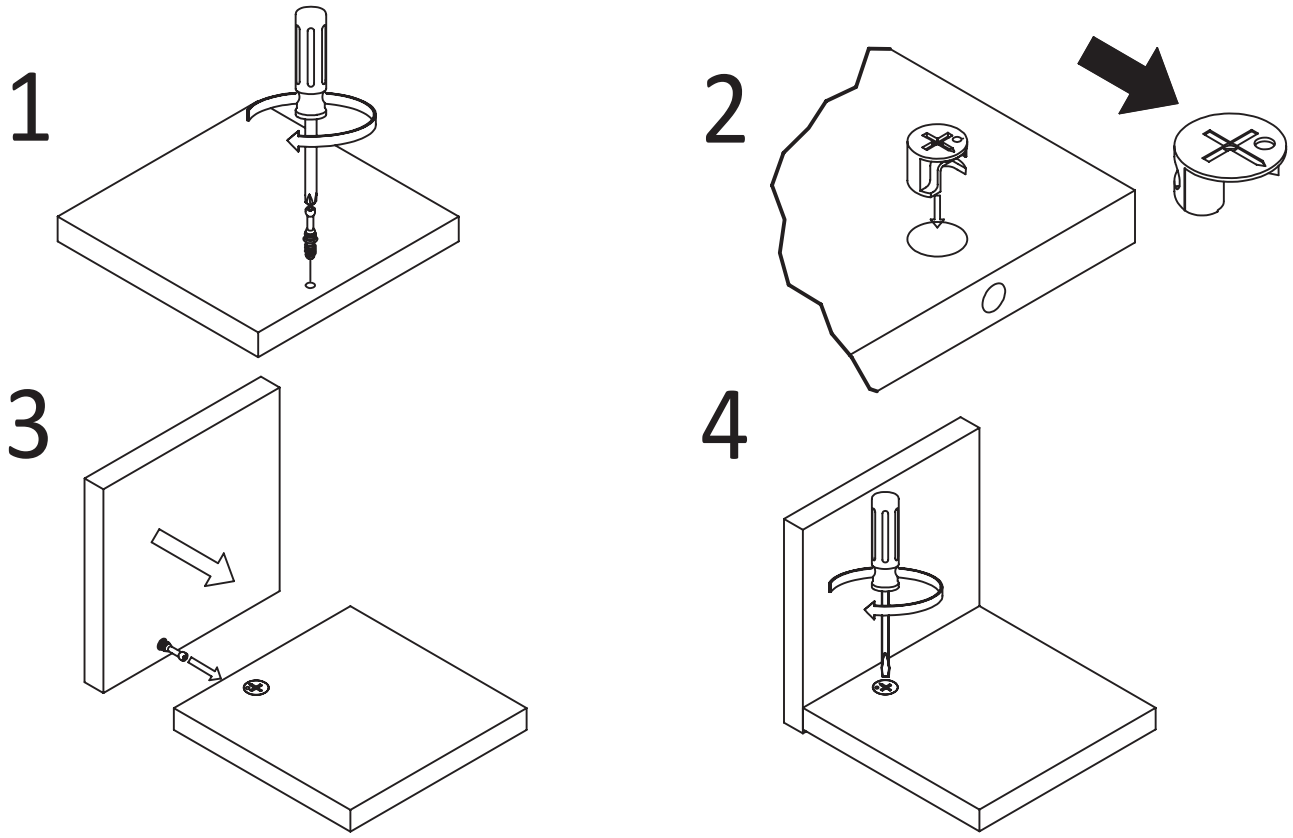

support@cenports.com

Board Identification

Not actual size

A

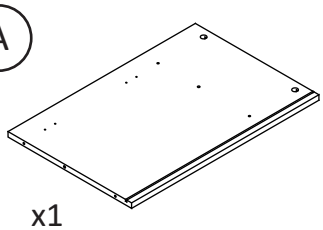

x1
SIDE PANEL LEFT

B

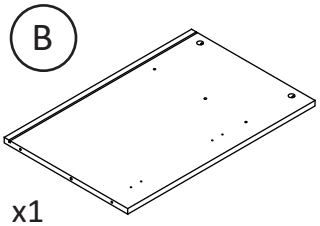

x1
SIDE PANEL RIGHT

C

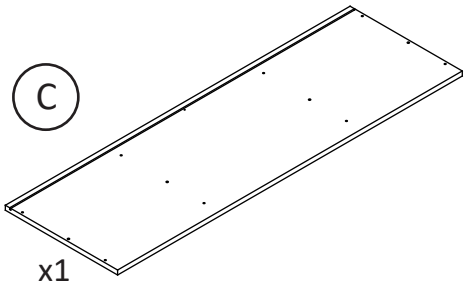

x1
TOP PANEL

D

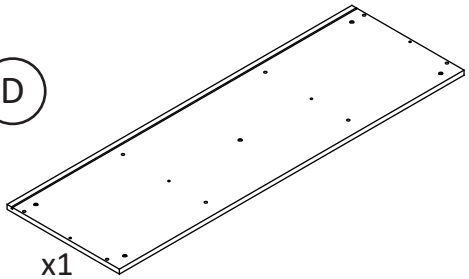

x1
BOTTOM PANEL

E

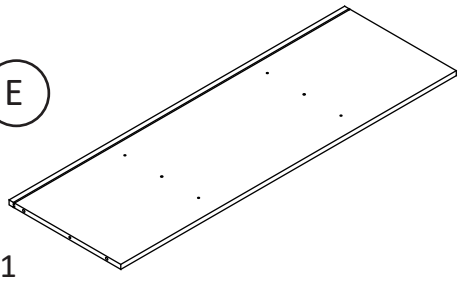

x1
TOP SHELF PANEL

F

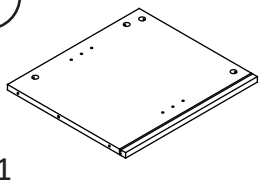

x1
LEFT PARTITION PANEL

G

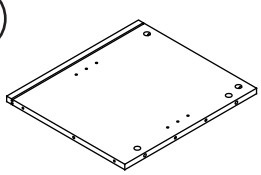

x1
RIGHT PARTITION PANEL

H

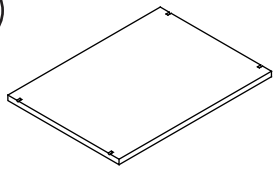

x1
ADJUSTABLE SHELF PANEL

I

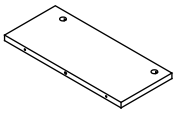

x2
TOP PARTITION PANEL

J

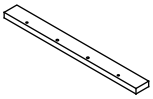

x2
FRONT SUPPORT PANEL

K

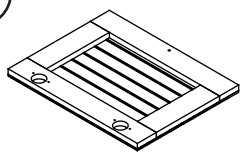

x1
DOOR LEFT PANEL

L

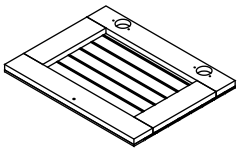

x1
DOOR RIGHT PANEL

Y

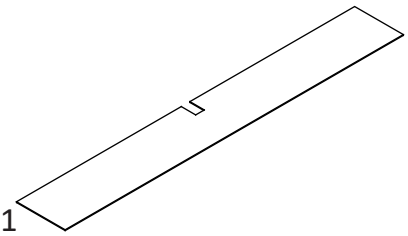

x1
TOP BACKPLY PANEL

Y1

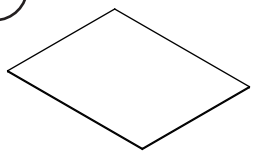

x2
BOTTOM BACKPLY PANEL

Y2

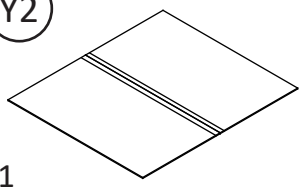

x1
CENTER BACKPLY PANEL

support@cenports.com

Part List

Not Actual Size

x20
Minifix Bolt

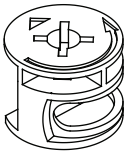

x20
Cam Lock
12-15

x18
Wood Dowel
6 X 30

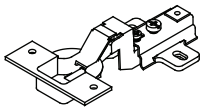

x4
Hinges 7/8

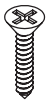

x16
Csk Screw
3.5 X 15

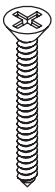

x2
Csk Screw
4 X 30

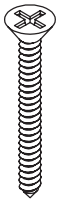

x4
Csk Screw
4.7 X 38

x8
Unitar Screw
6.3 X 40

x4
Solidwood Leg
(150mm)

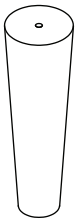

x1
Center Leg
(150mm)

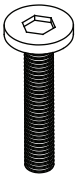

x5
Jcbc Screw
6 x 32

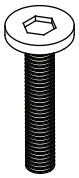

x5
Jcbc Screw
6 x 32

x4
Shelf Stopper

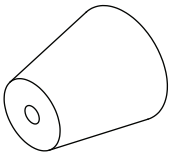

x2
Handle

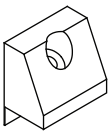

x20
Backply Stopper

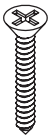

x20
Csk Screw
3.1 X 20

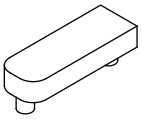

x2
Door Stopper

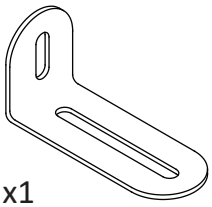

x1
L-Mounting Bracket

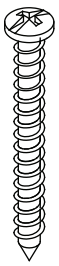

x1
Pan Head Screw
4 X 52

x1
Pan Head Screw
4 X 16

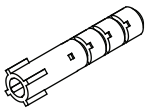

x1
Wall Plug
(25mm)

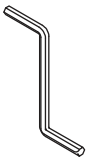

x1
Allen Key M4

support@cenports.com

Step 1

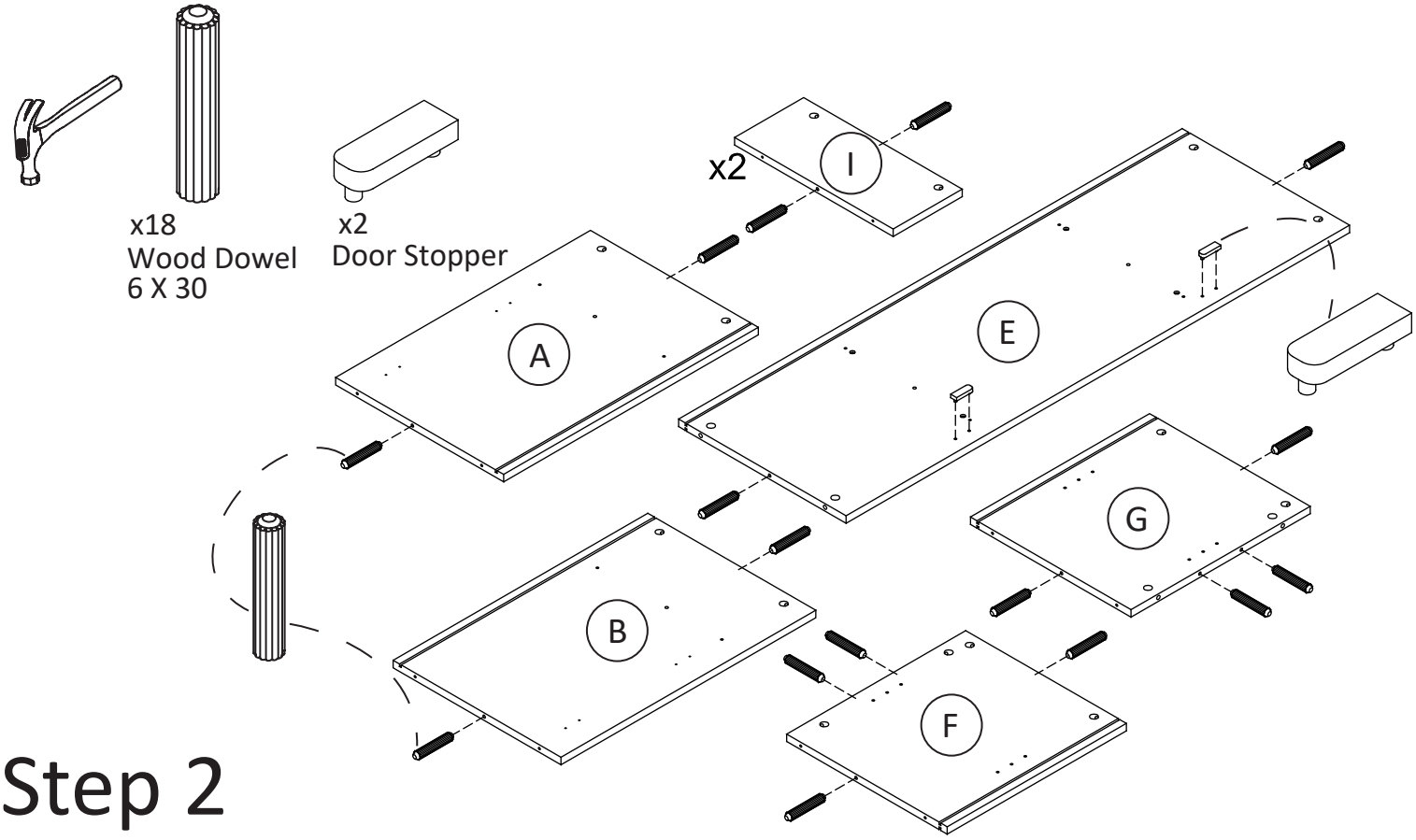

Step 2

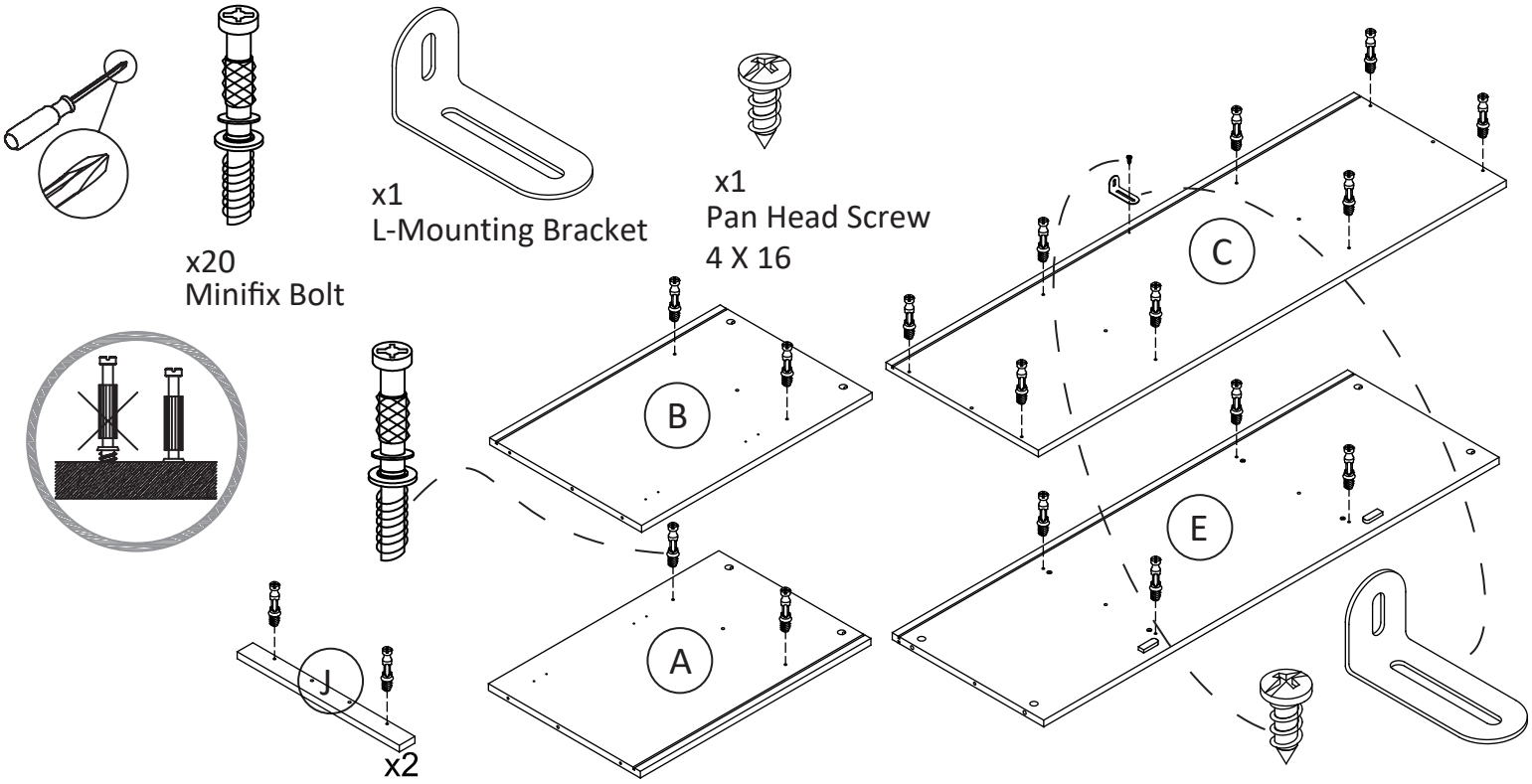

support@cenports.com

Step 3

x8
Csk Screw
3.5 x 15

x4
Hinges
7/8

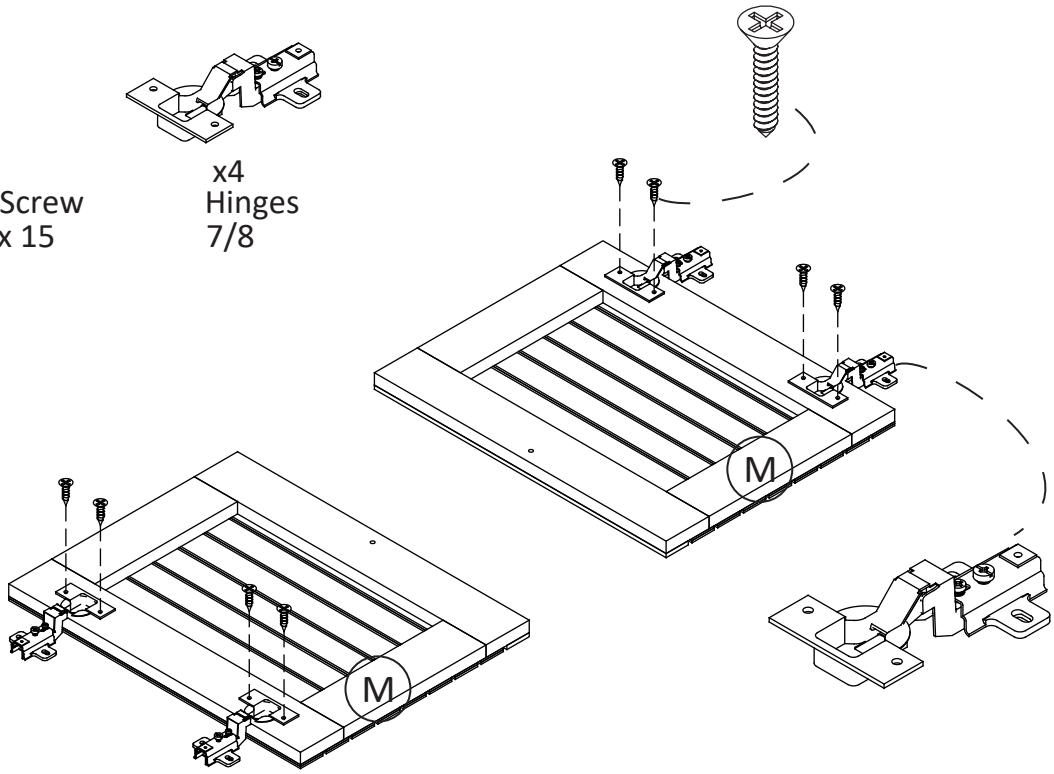

Step 4

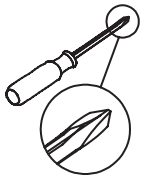

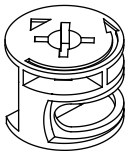

x2
Cam Lock
12-15

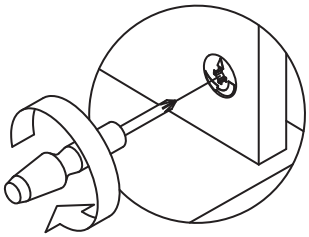

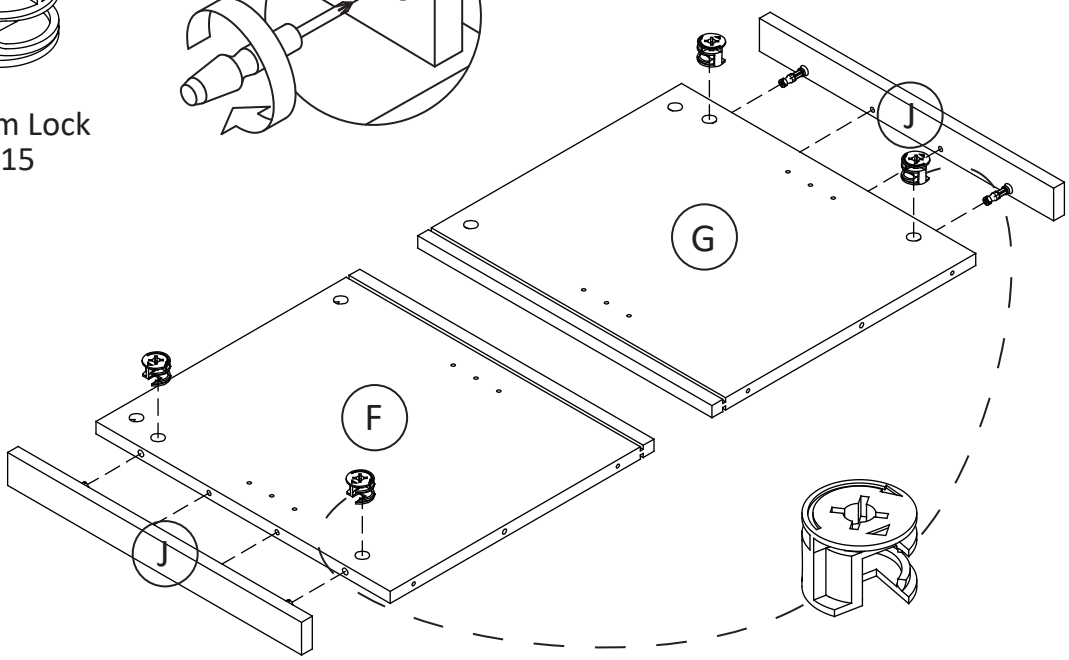

support@cenports.com

Step 5

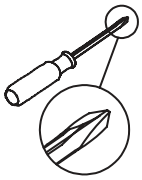

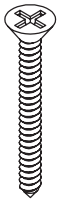

x4
Csk Screw
4.7 X 38

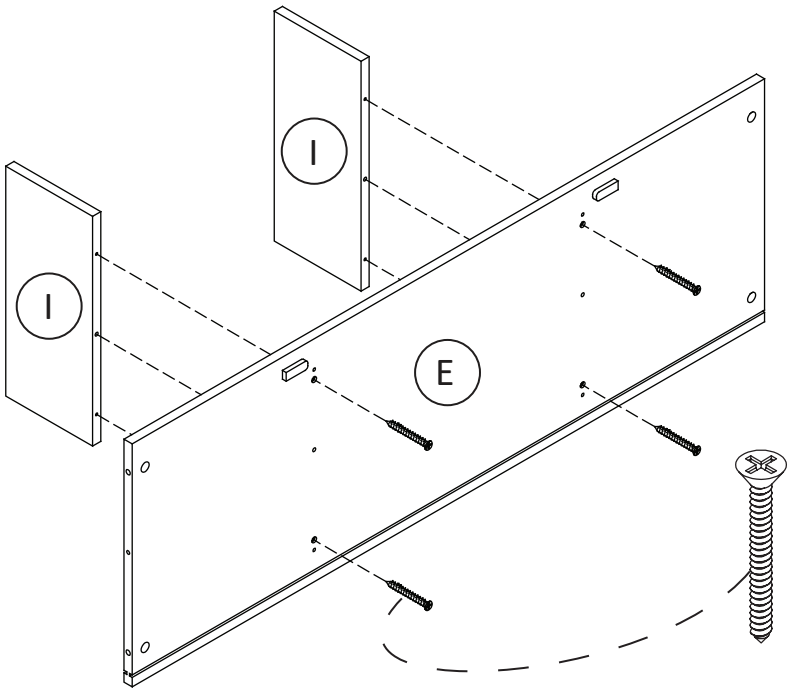

Step 6

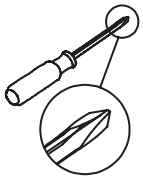

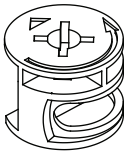

x4
Cam Lock
12-15

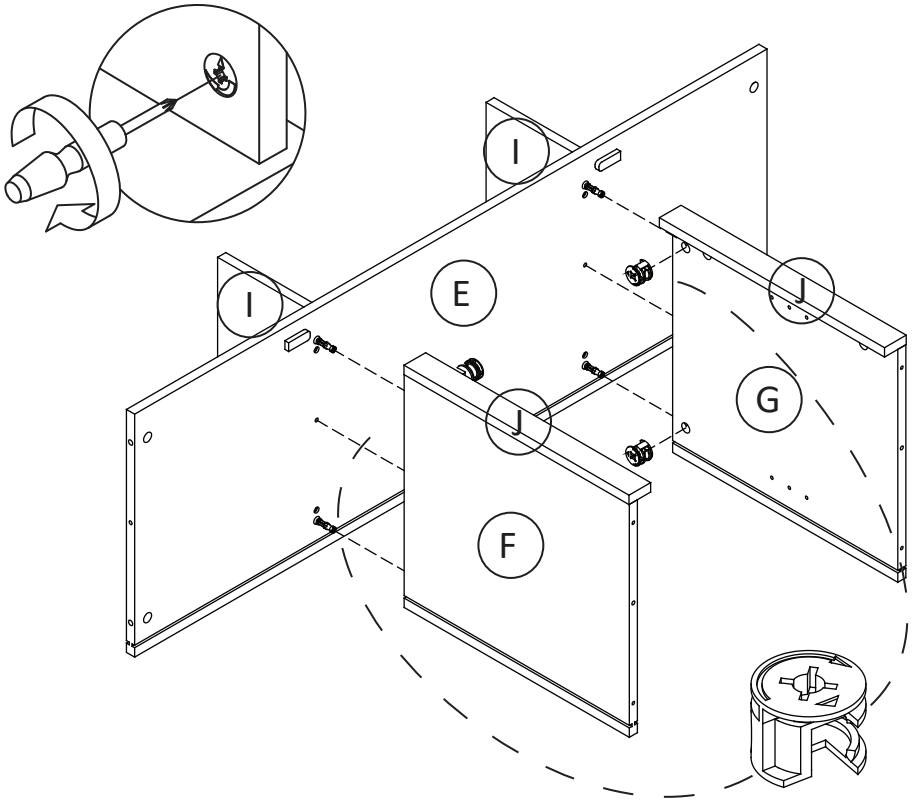

support@cenports.com

Step 7

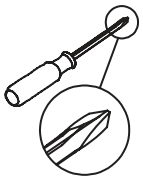

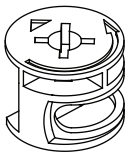

x4
Cam Lock
12-15

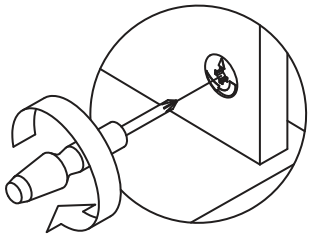

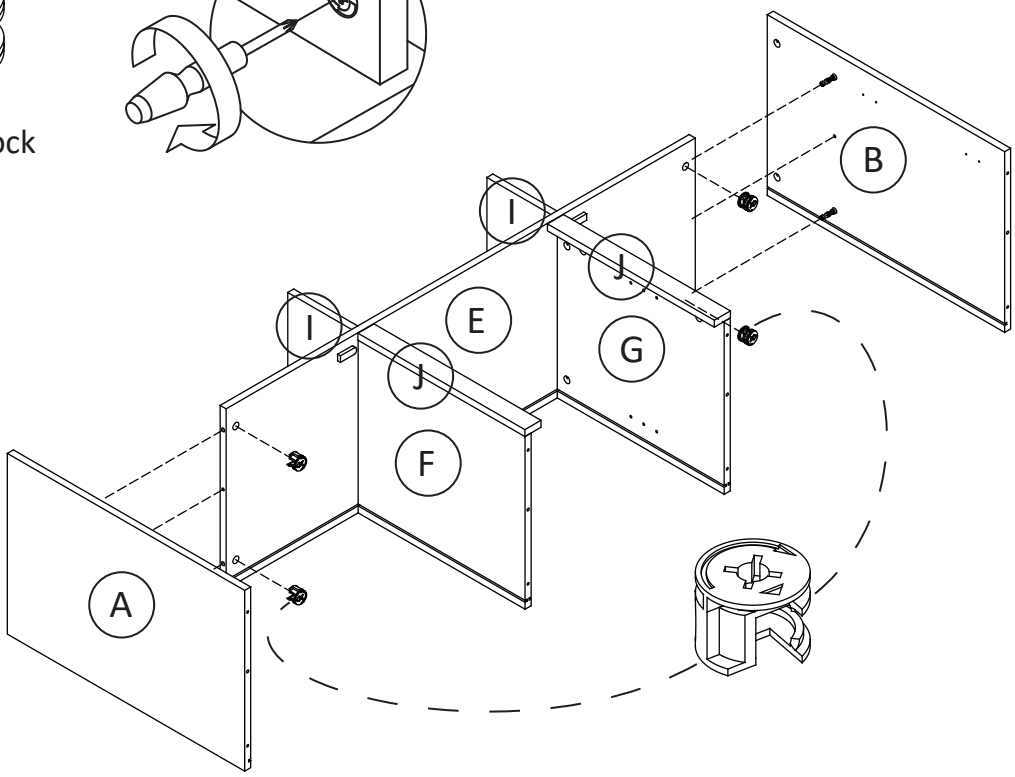

Step 8

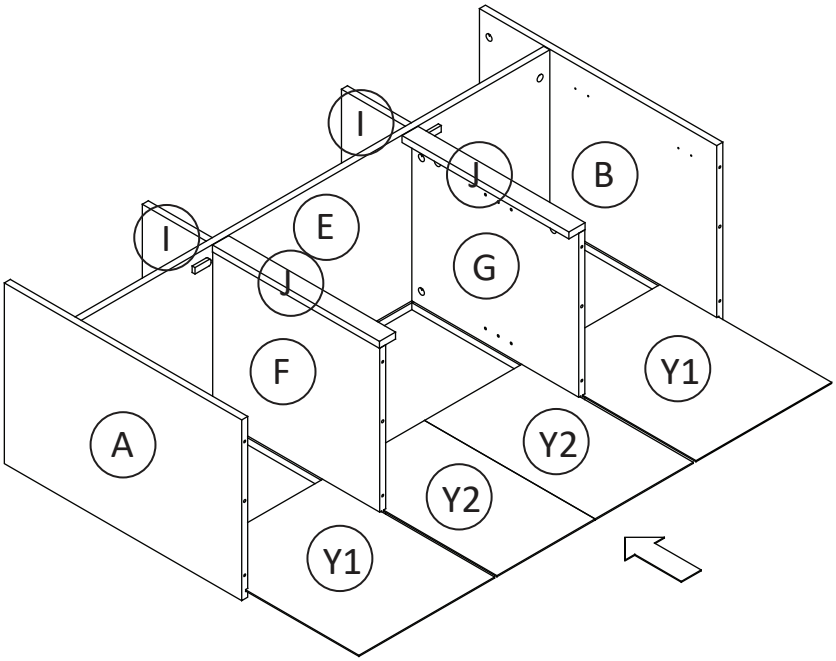

support@cenports.com

Step 9

x4
Solidwood Leg
(150mm)

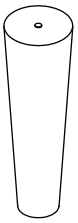

x1
Center Leg
(150mm)

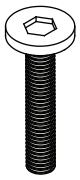

x5
Jcbc Screw
6 x 32

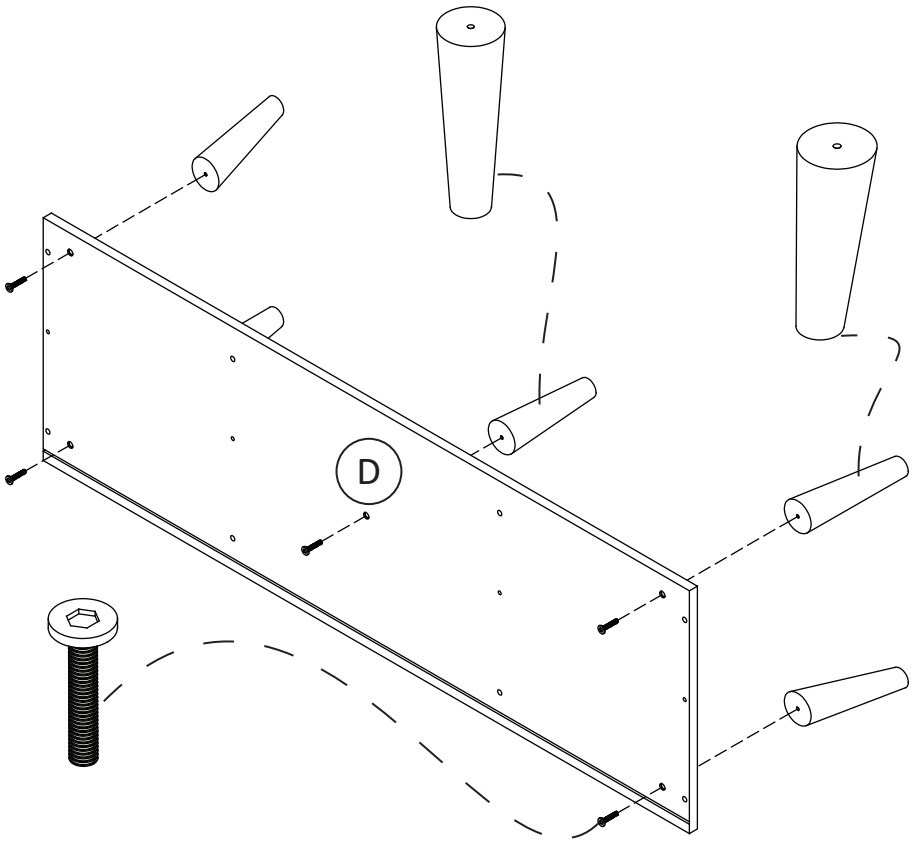

Step 10

x8
Unitar Screw
6.3 X 40

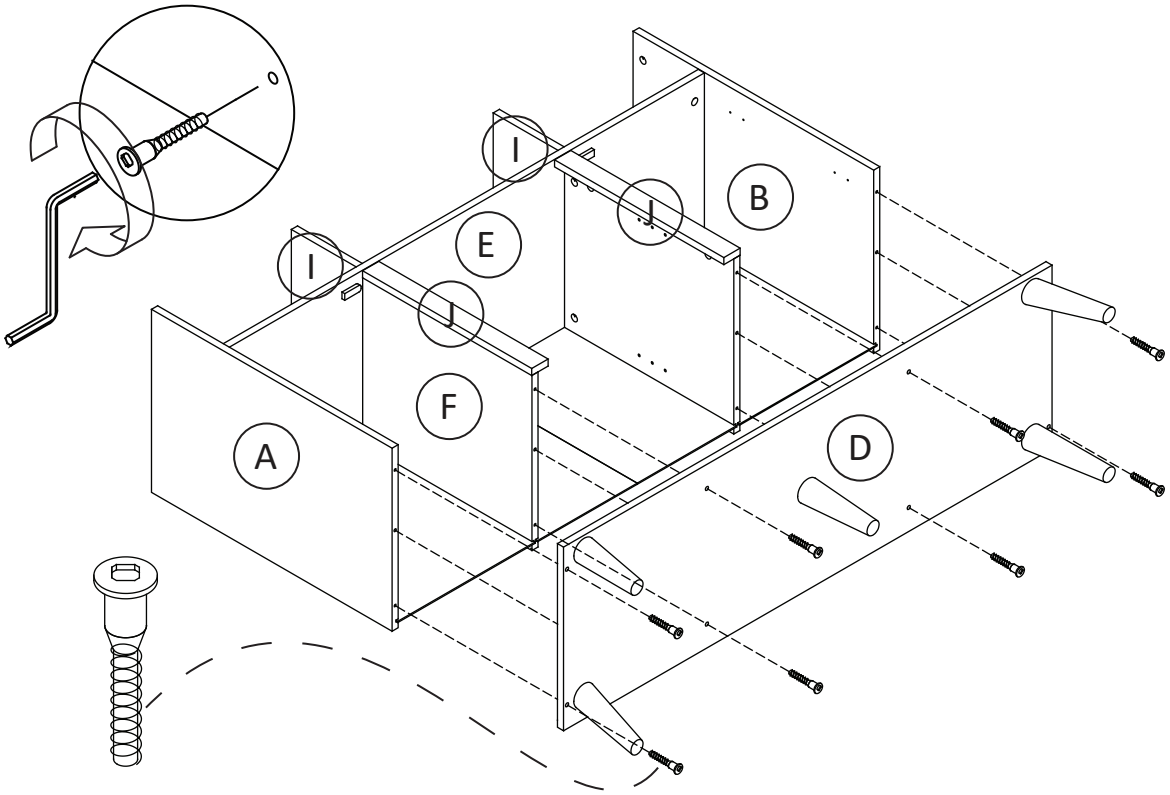

support@cenports.com

Step 11

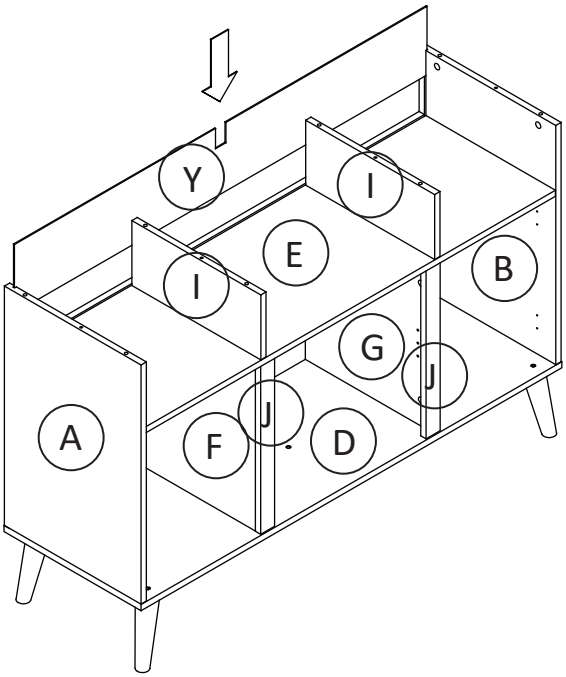

Step 12

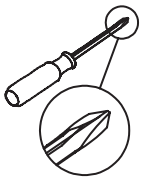

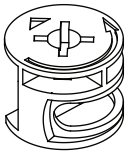

x8
Cam Lock
12-15

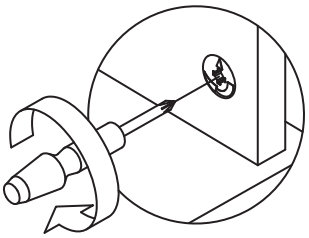

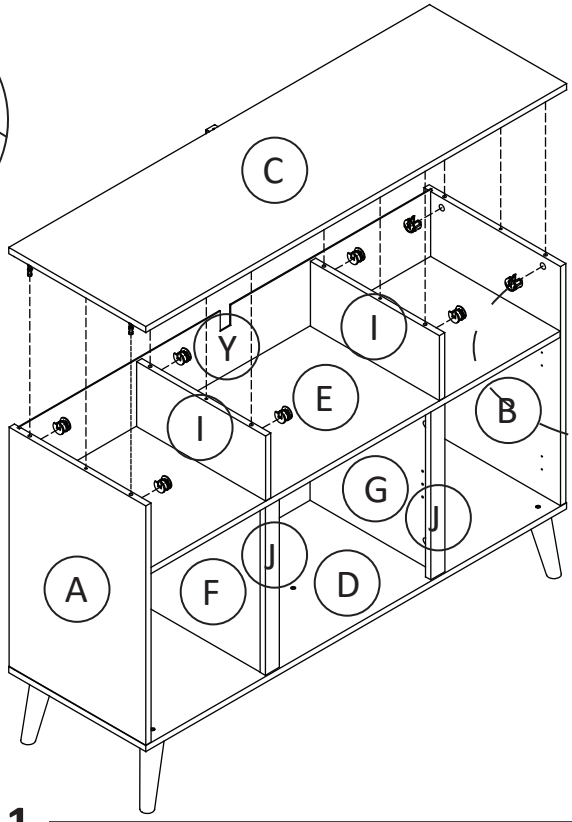

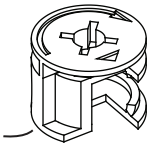

support@cenports.com

Step 13

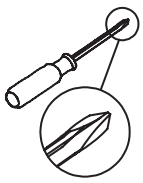

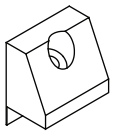

x20
Backply Stopper

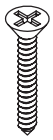

x20
Csk Screw
3.1 x 20

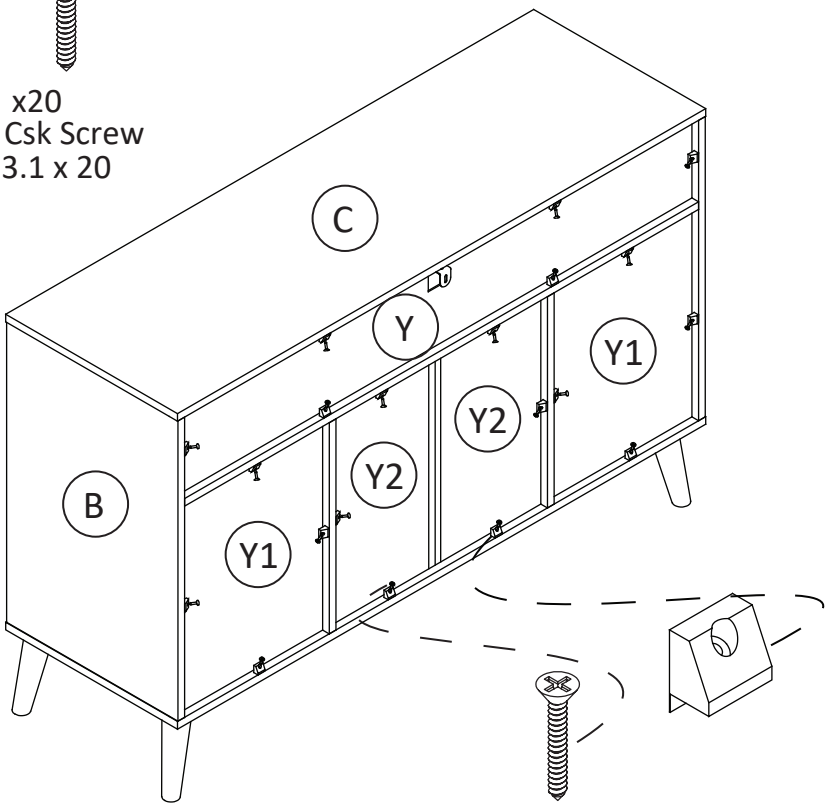

Step 14

x4
Shelf Stopper

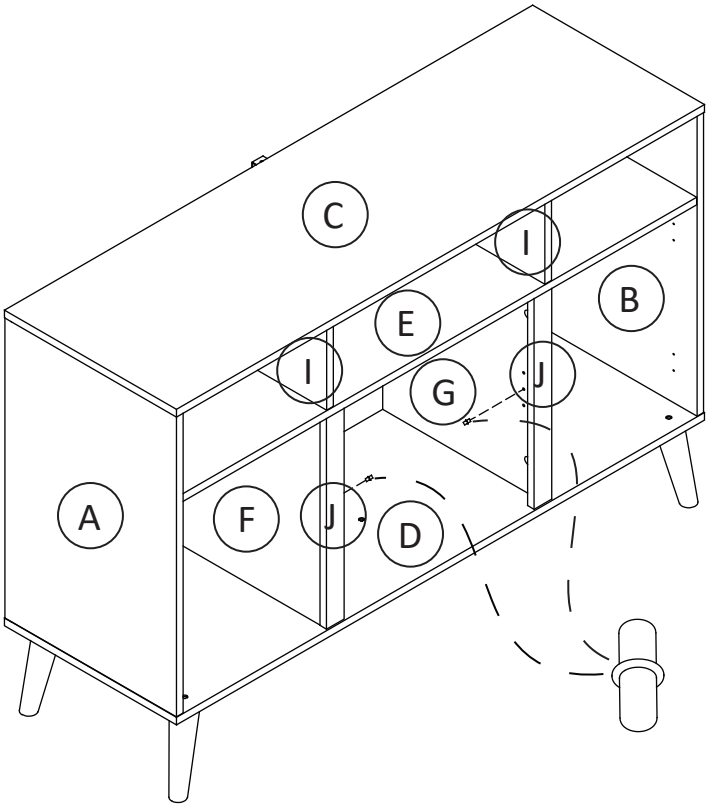

support@cenports.com

Step 15

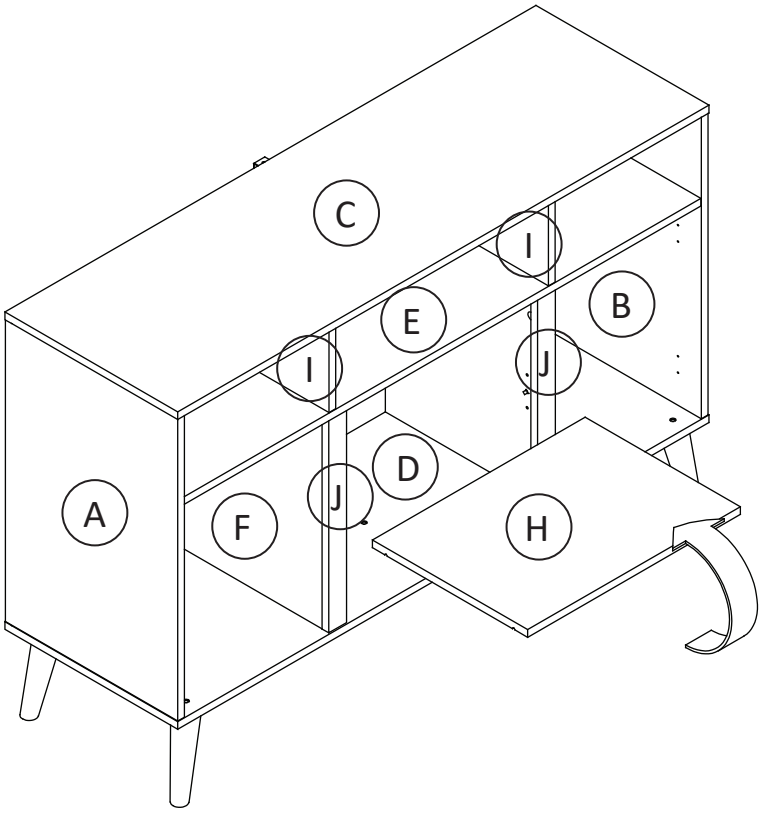

Step 16

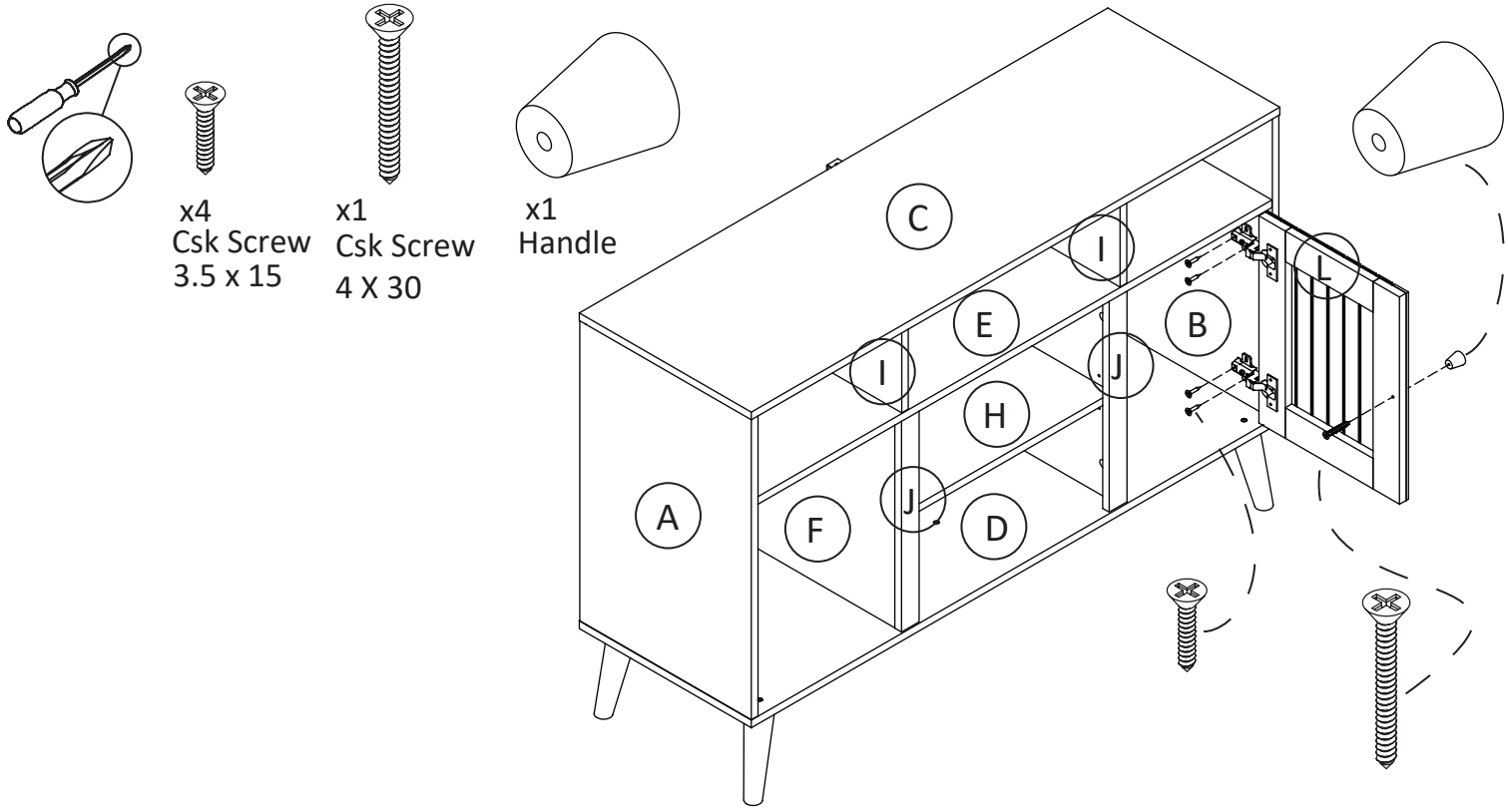

support@cenports.com

Step 17

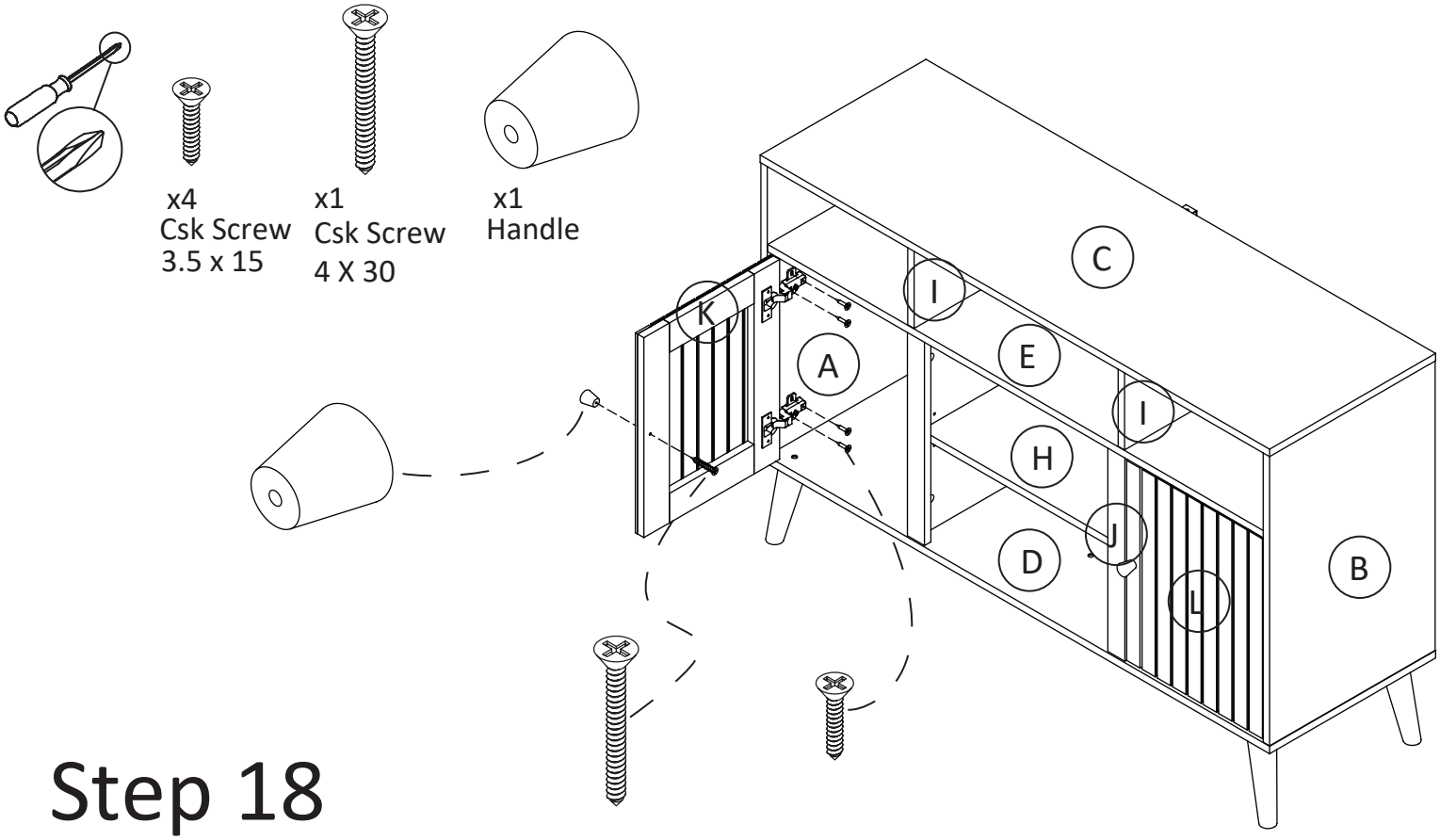

Step 18

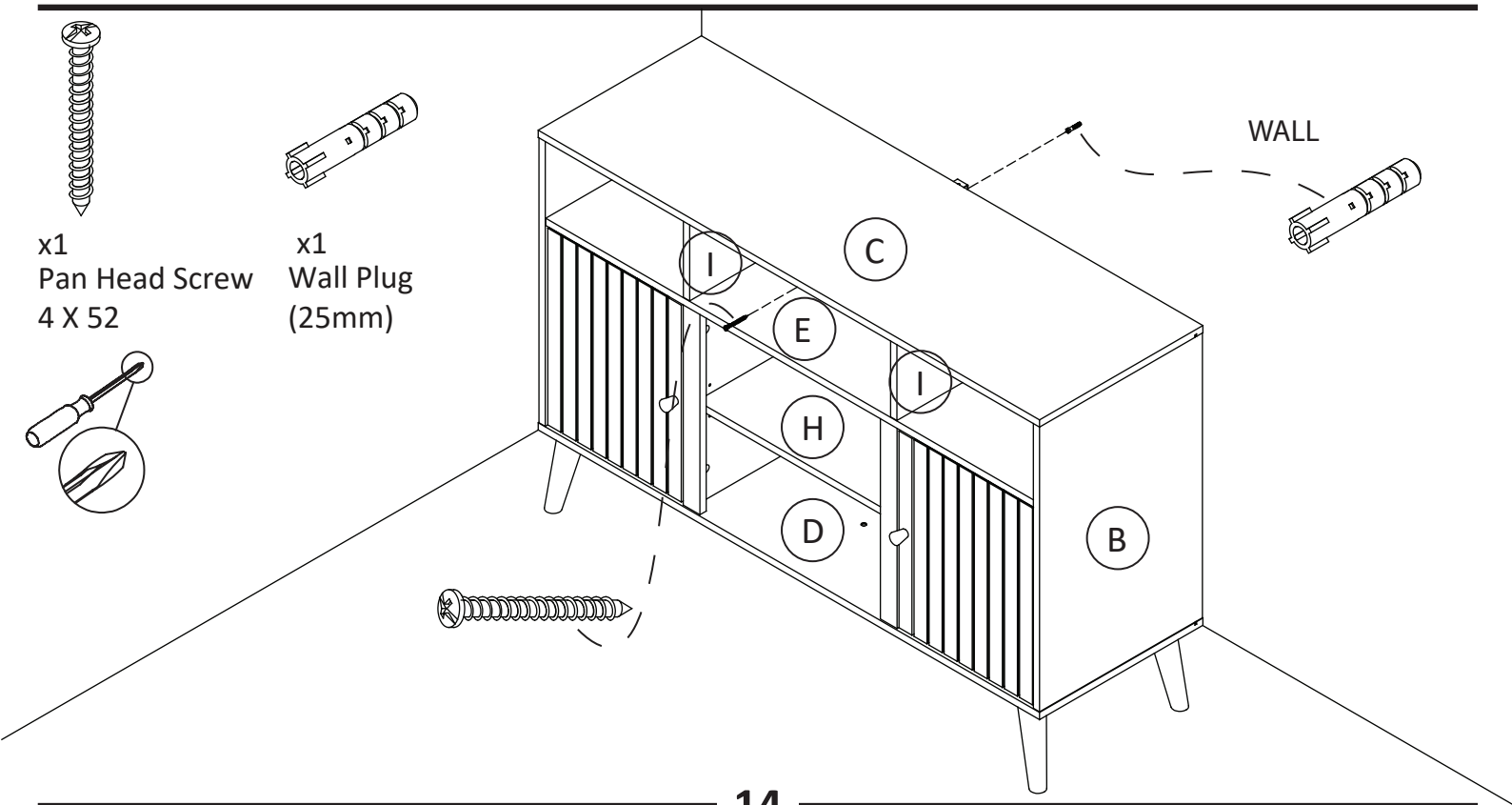

support@cenports.com

MAX WEIGHT LOAD: 99 LBS

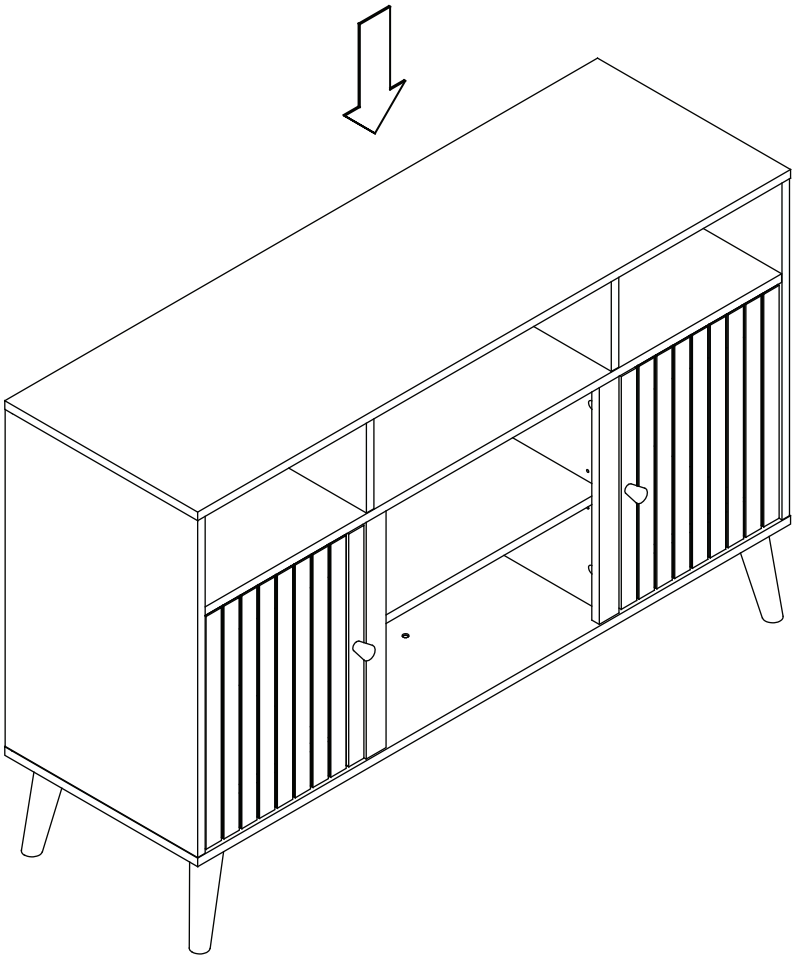

support@cenports.com

Tips for Proper Care and Maintenance of Particle Board Furniture

Understanding Particle Board

Particle Board Composition:

Particle board is composed of wood particles, such as sawdust and wood chips, bonded together with adhesive under high pressure. The surface of particle board is typically covered with a laminate or veneer to enhance its appearance.

Sensitivity to Moisture:

One of the primary vulnerabilities of particle board is its sensitivity to moisture. Excessive exposure to water or high humidity can cause swelling, warping, or delamination.

Cleaning and Maintenance Guidelines

1. Dust Regularly:

Regular dusting is crucial to prevent the accumulation of dirt and grime on particle board surfaces. Use a soft, dry cloth or a duster to gently remove dust.

2. Avoid Excess Water:

Particle board should not be cleaned with excessive water or harsh cleaning agents. Use a slightly damp (not wet) cloth with a mild cleaner specifically designed for wood surfaces.

3. Protect from Direct Sunlight:

Prolonged exposure to direct sunlight can cause discoloration or fading of the particle board surface. Position furniture away from direct sunlight or use window coverings to reduce exposure.

4. Use Coasters and Mats:

Protect particle board surfaces from hot items, spills, and scratches by using coasters, placemats, or felt pads under objects. This precaution prevents damage and preserves the furniture's appearance.

5. Repair Minor Damage Promptly:

Address minor damage such as scratches or small chips promptly. You can use touch-up markers or putty to fill in and conceal minor imperfections. Ensure that the repair materials match the furniture's colour and finish.