ASSEMBLY INSTRUCTIONS

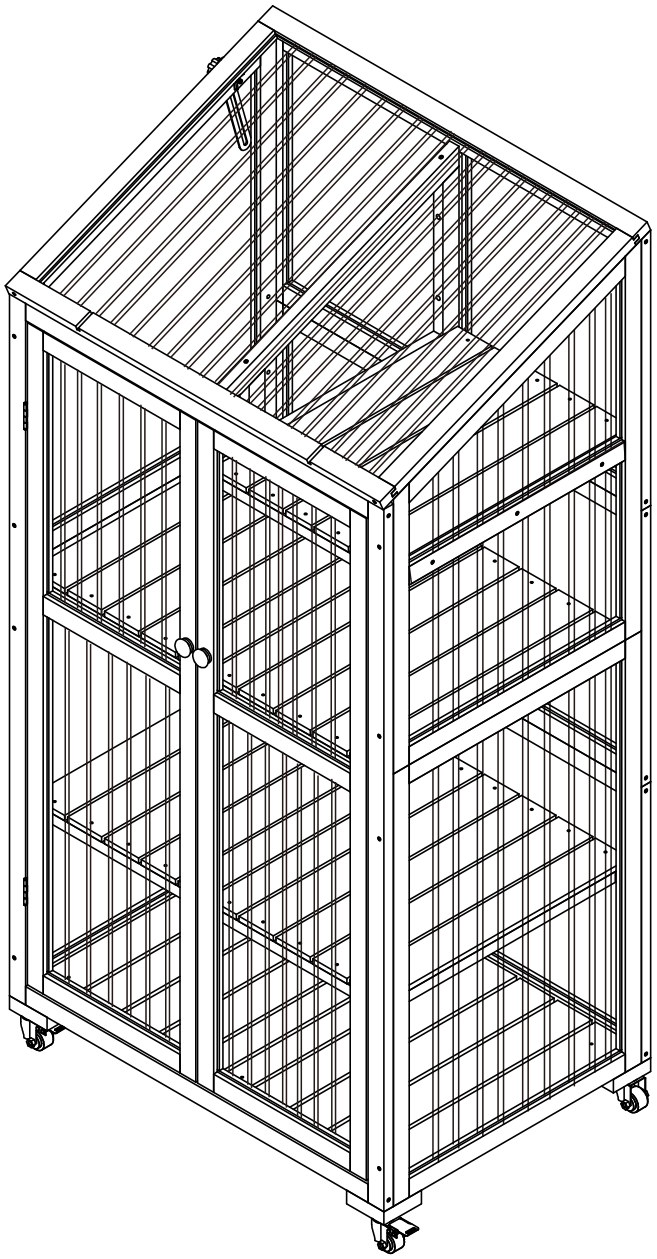

IMPORTANT NOTE :

① PLACE ALL PARTS ON A CLEAN AND SMOOTH SURFACE SUCH AS A RUG OR CARPET TO AVOID THE PARTS FROM BEING SCRATCHED.

② BEFORE YOU BEGIN,KINDLY FOLLOW THE ASSEBLY INSTRUCTIONS STEP BY STEP.

③ DO NOT TIGHTEN ALL SCREWS AND BOLTS UNTIL THIS ITEM IS FULLY SET-UP.

Detail View

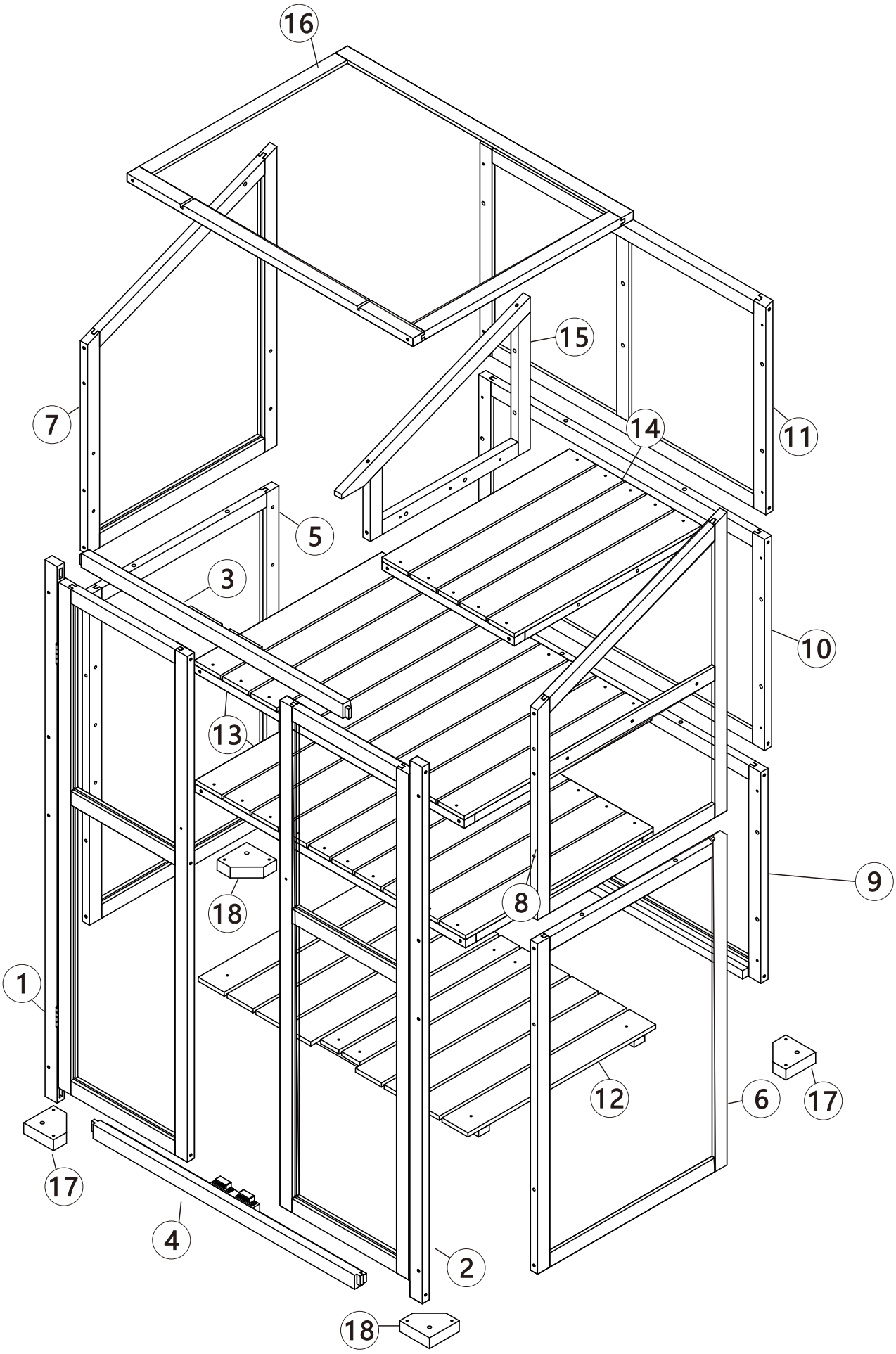

1 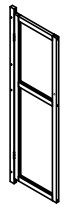	2 	3 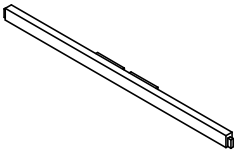	4 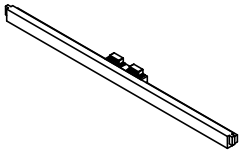
Left door 1pc	Right door 1pc	Upper slat of front frame 1pc	Lower slat of front frame 1pc
5 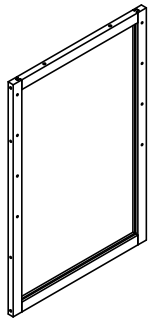	6 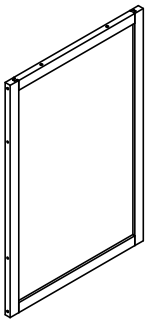	7 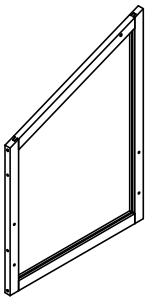	8 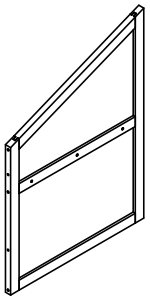
Lower part of left panel 1pc	Lower part of right panel 1pc	Upper part of left panel 1pc	Upper part of right panel 1pc
9 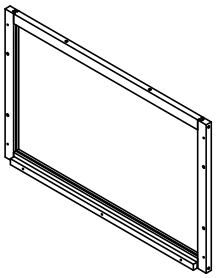	10 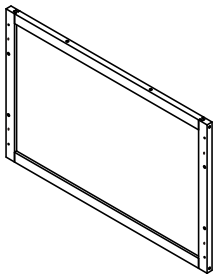	11 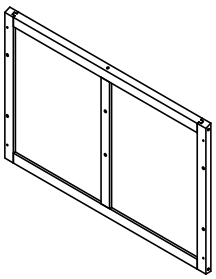	12 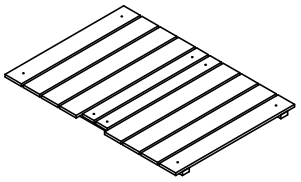
Lower part of back panel 1pc	Middle part of back panel 1pc	Upper part of back panel 1pc	Bottom panel 1pc
13 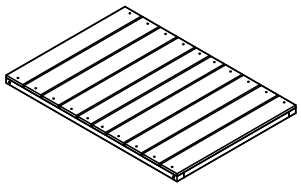	14 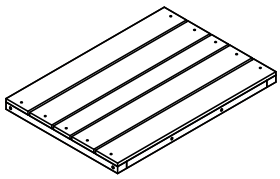	15 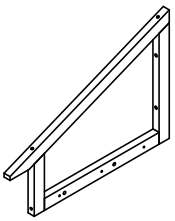	16 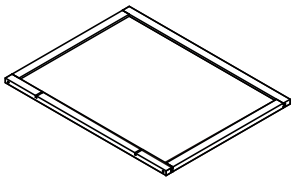
Lower shelf 2pcs	Upper shelf 1pc	Support part of shelf 1pc	Roof 1pc
17 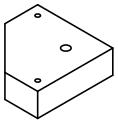	18 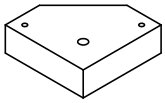		
Base 1=2pcs	Base 2=2pcs		

Hardware List

A  3.5*40	B  3.5*60	C 3.0*16	D  M4*26
Ph zinc screws-38+1pcs	Ph zinc screws-4+1pcs	Ph zinc screws-5+1pcs	Ph zinc bolt-2+1pcs
E  M6*60	F 	G 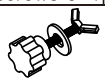 M6*35	H 
Ph zinc bolt-2+1pcs	Dowel-32pcs	Torx bolt -1pc	Metal struct-1pc
I 	J 	K 	L 
Door knob-2pcs	Omni-directional wheel with brake-2pcs	Omni-directional wheel without brake-2pcs	Layer board support-8pcs
M 	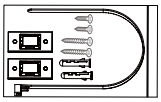		
wrench-1pc	Anti-topple over sets-2pcs		

ASSEMBLY TOOLS REQUIRED(NOT INCLUDED)

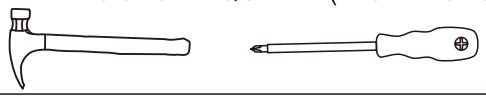

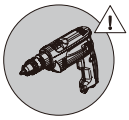

PLEASE BE CAREFUL DO NOT DAMAGE THE HOLE POSITION WHEN YOU USE POWERTOOLS !

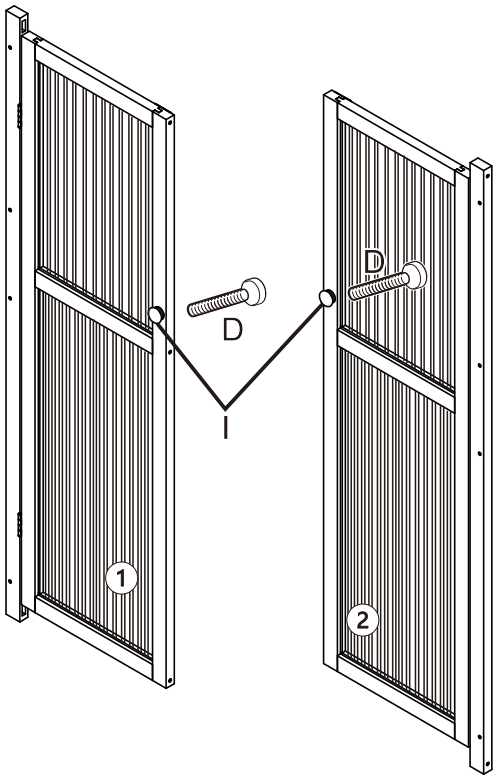

step 1

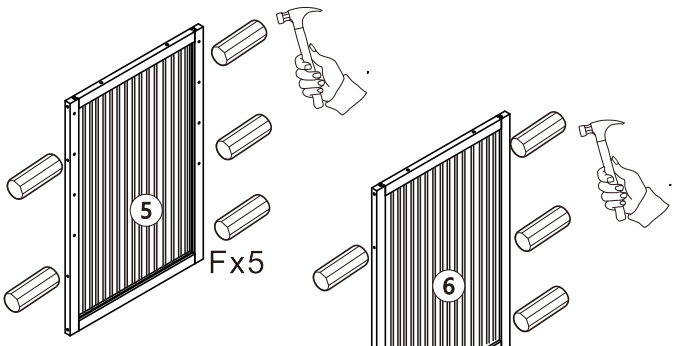

Attention: The pre-drills holes of part 5&6&9 need to face upwards .

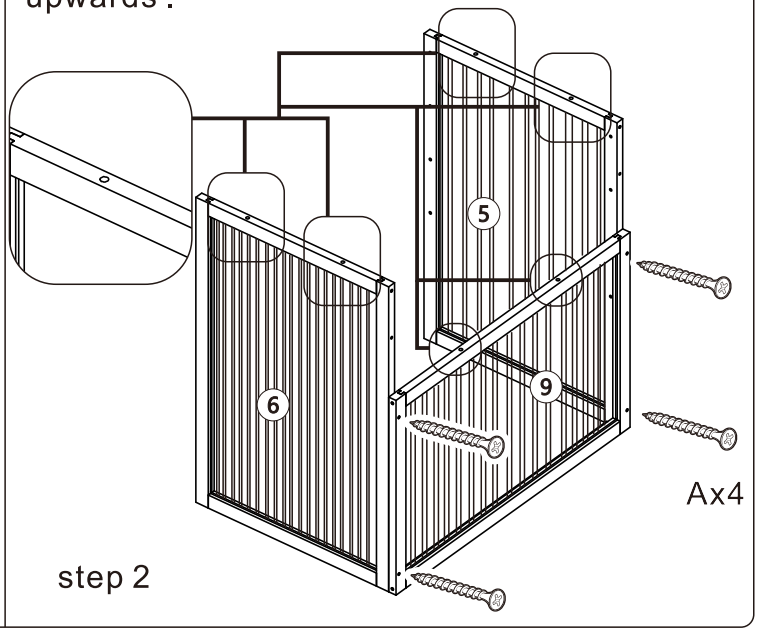

step 2

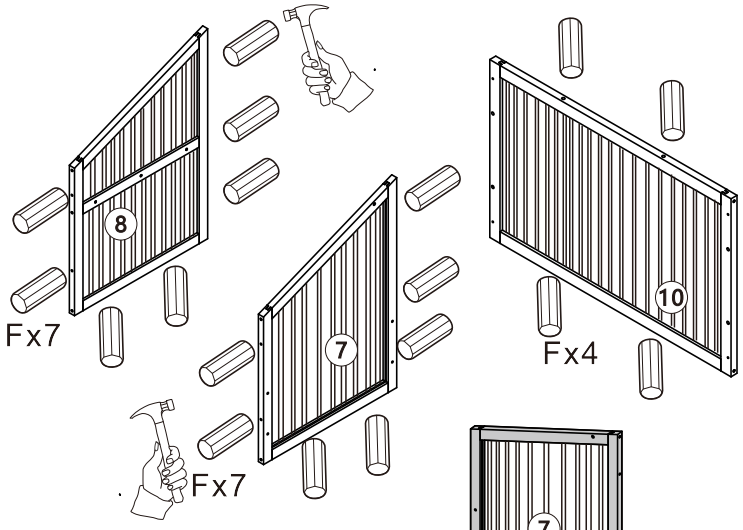

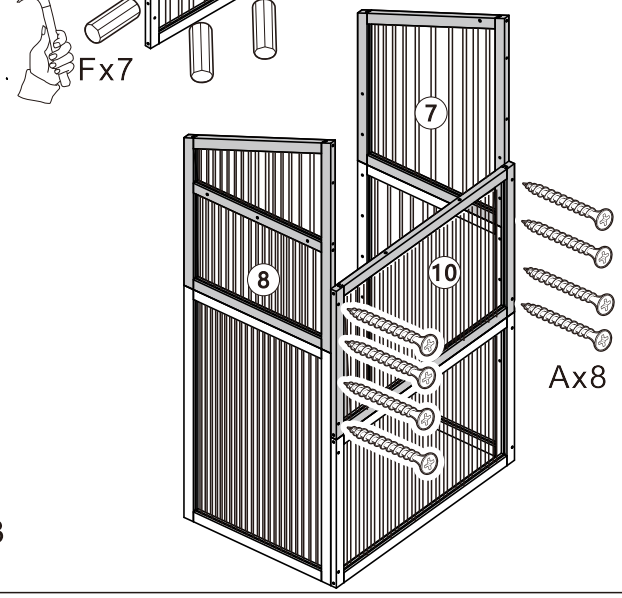

step 3

The pre-drill holes of part 11
need to face downwards

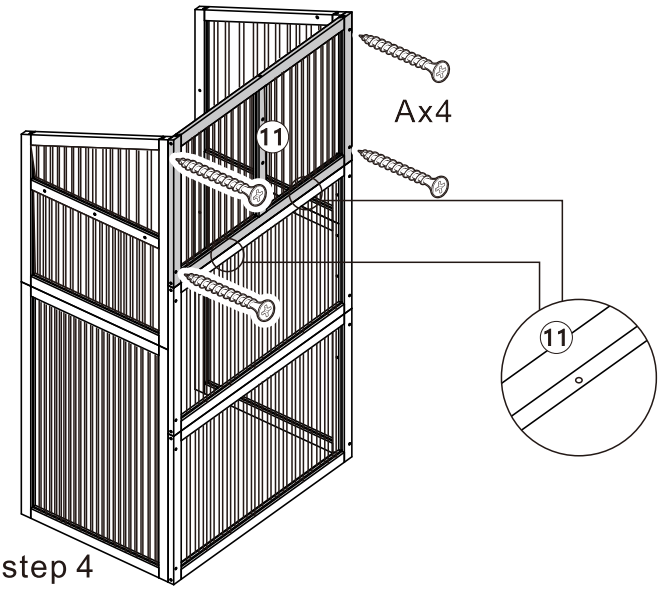

step 4

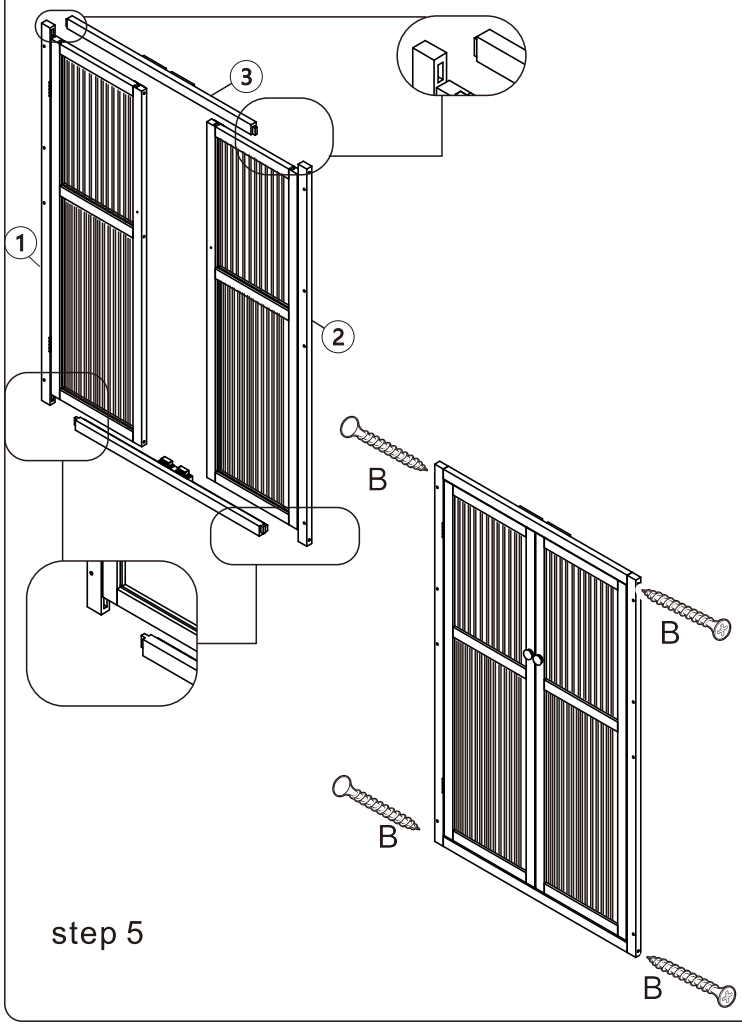

step 5

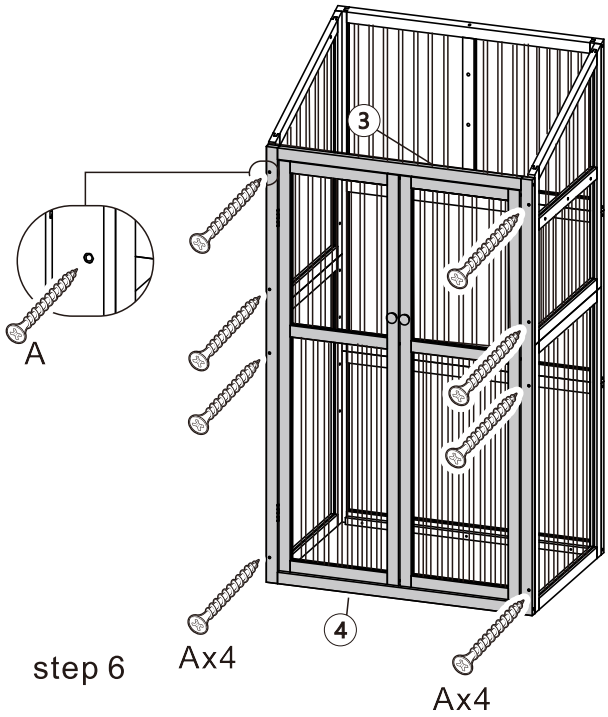

step 6

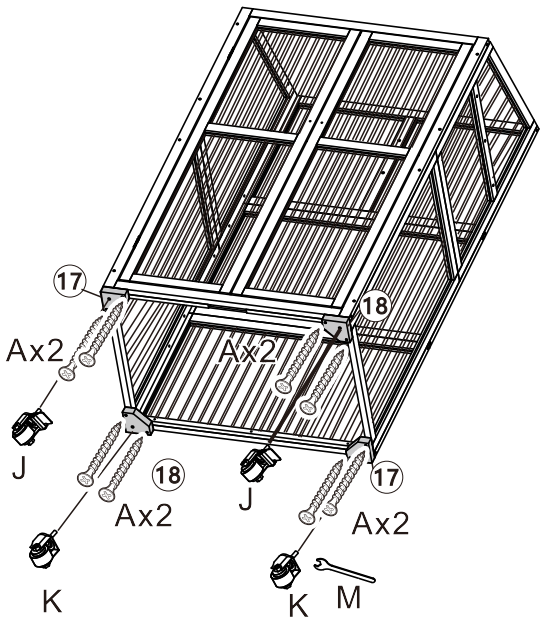

Fasten Macanum wheels (Part J&K) by wrench

step 7

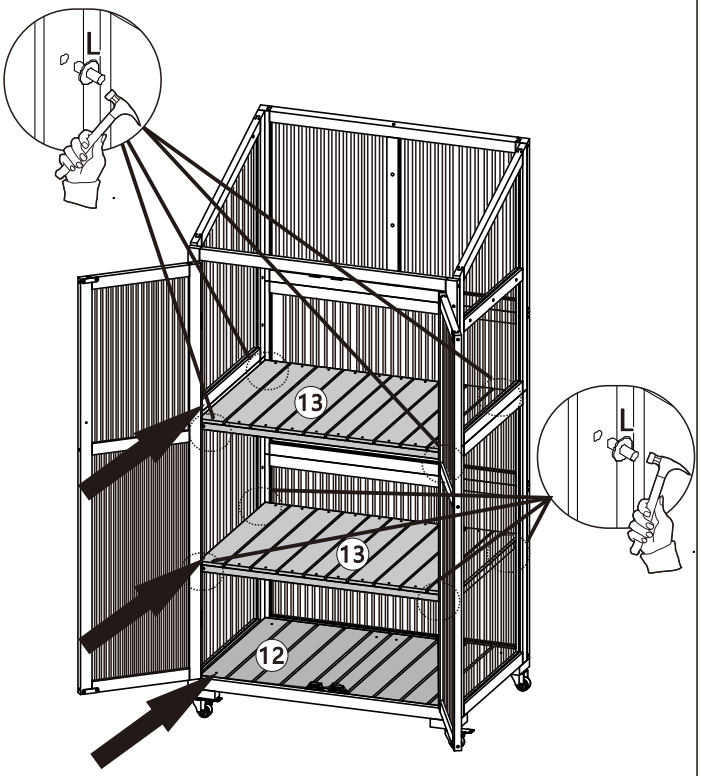

step 8

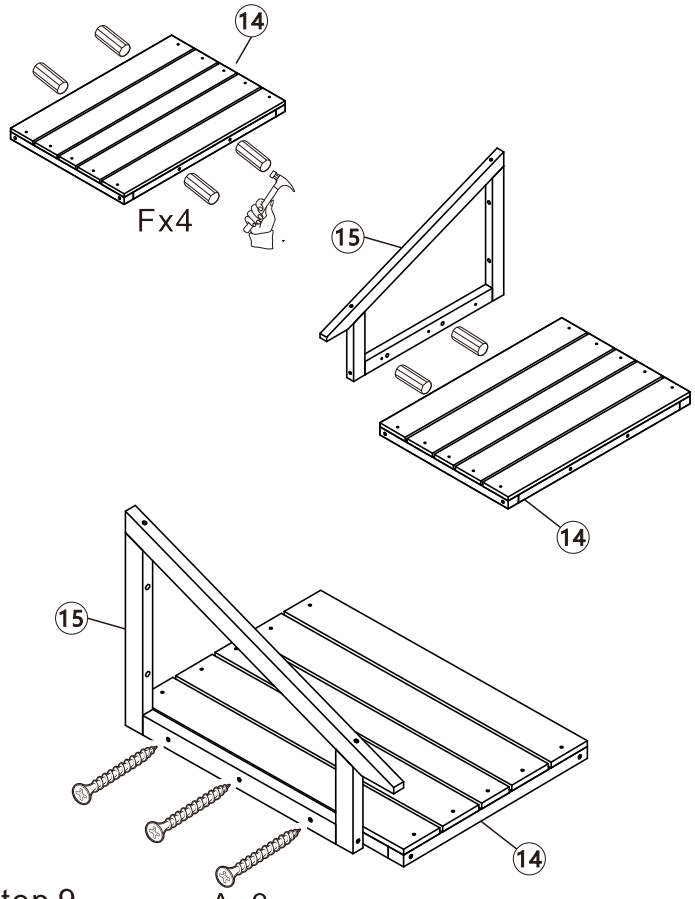

step 9

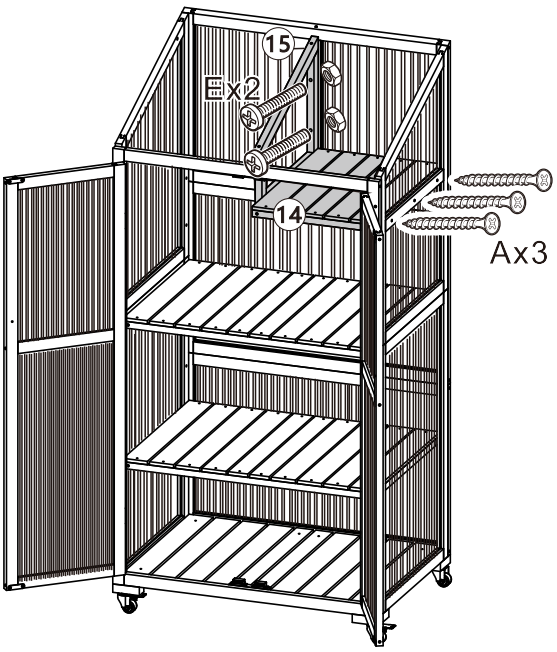

step 10

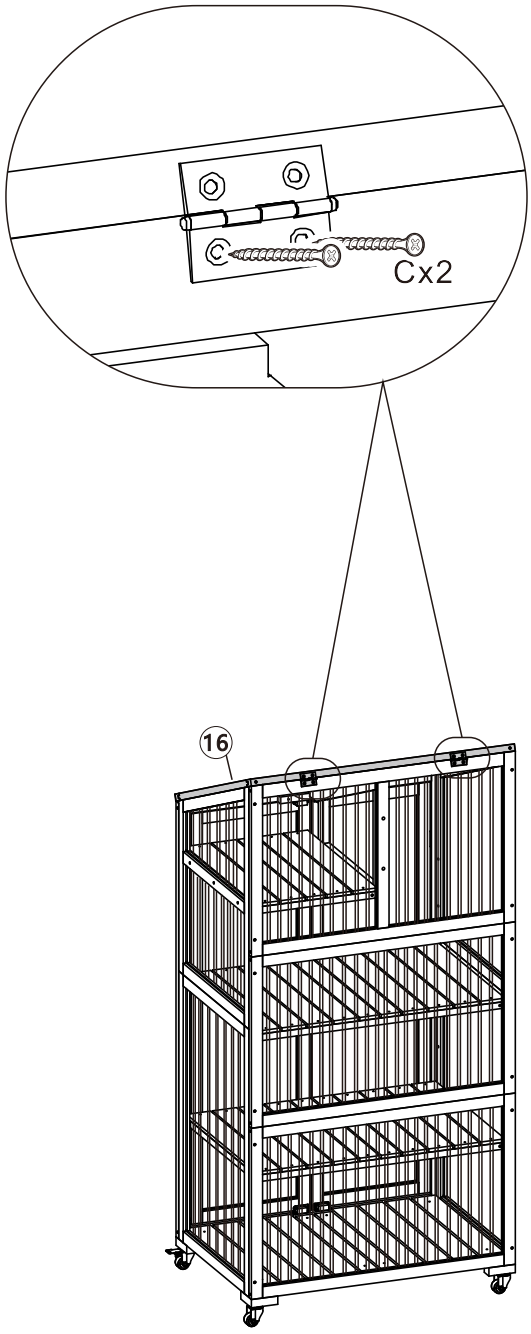

step 11

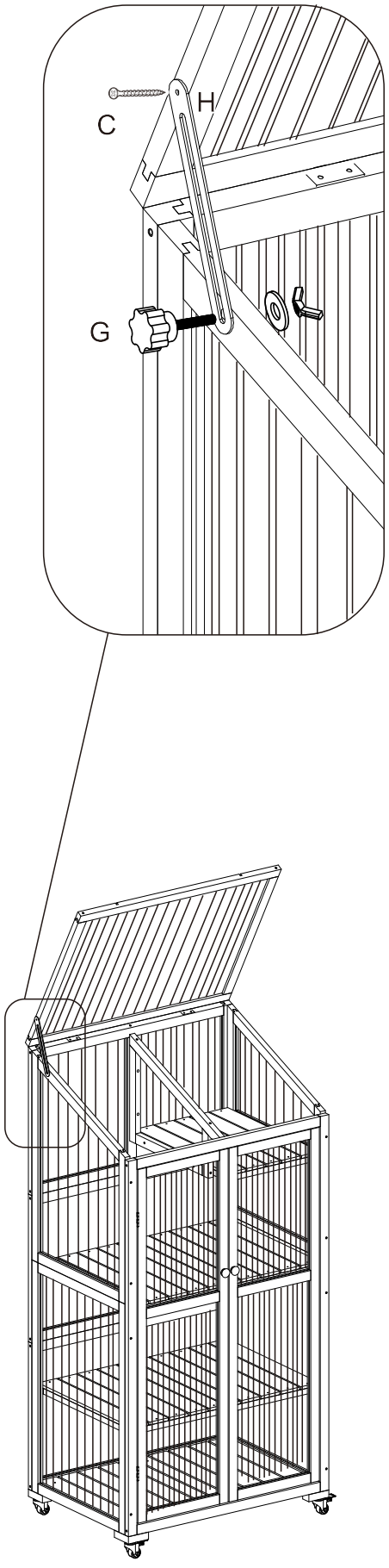

step 12

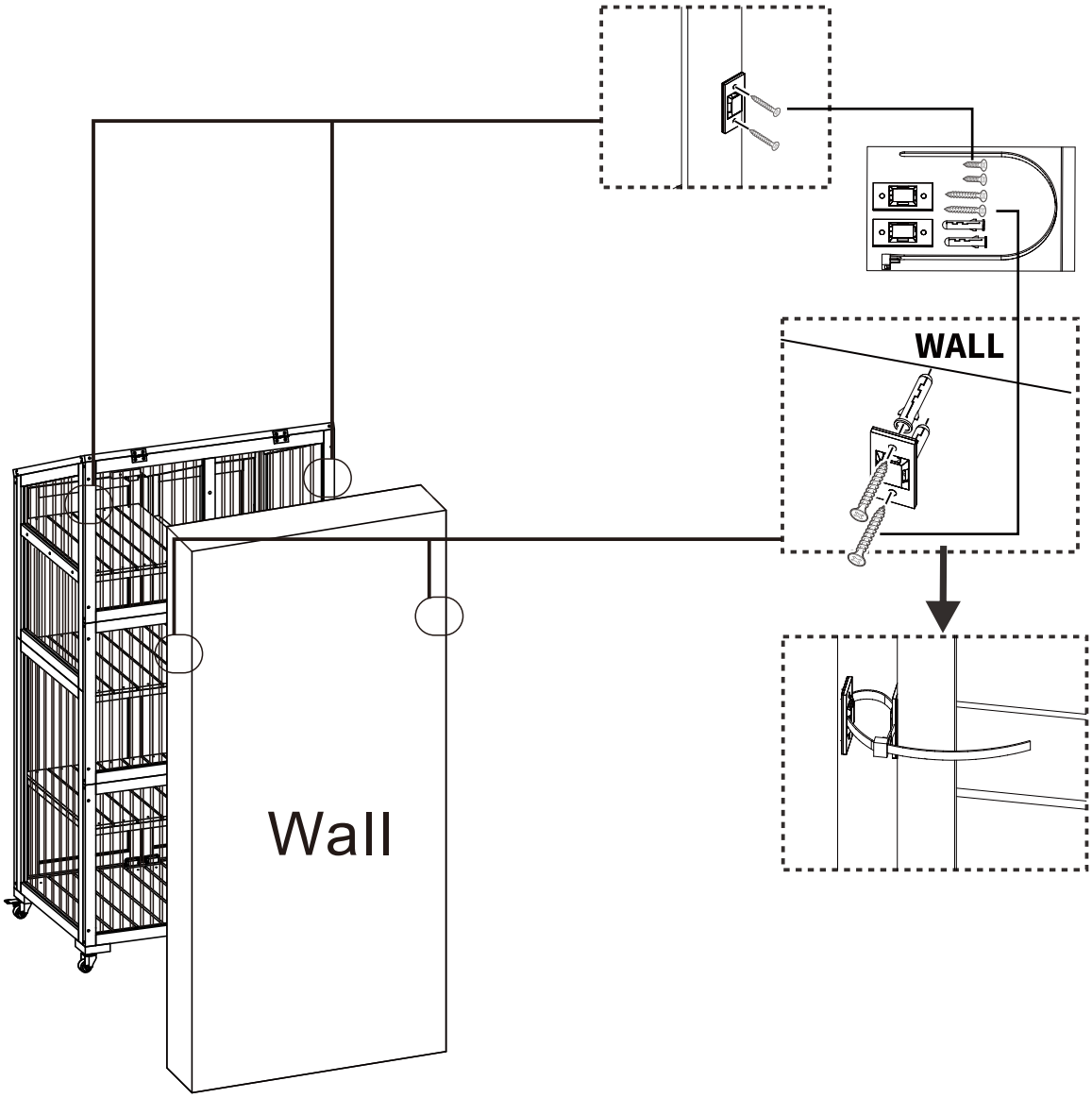
WALL
Wall