Frame Assembly Instruction

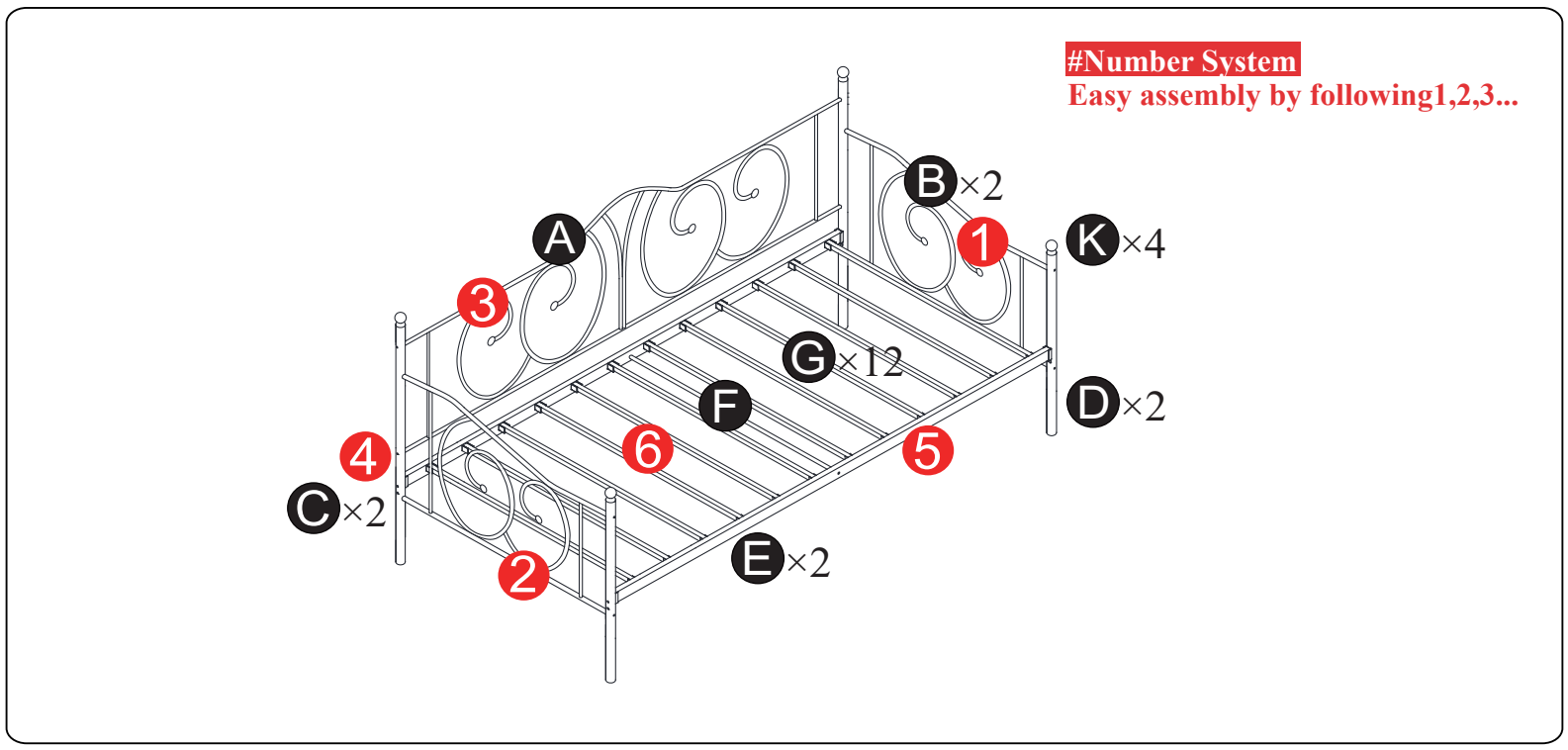

Componets

A		×1
B		×2
C		×2
D		×2
E		×2
F		×1
G		×12
K		×4

Screws &Tools

1		M8*50mm	8
2		M6*60mm	14
3		M8	4
4		M8	8
5		M5	1
6		M13/M10	1

Check all the components & screws before assembly.
Do not install in case part is missing, contact us.

Trouble shooting:

Missing parts → Send email with your question → Resend within 24 hours → Issue resolved

Other issues → Send email with your issue → Respond within 24 hours → Issue resolved

We control manufacturing and distribution ourselves, ensure the quality.

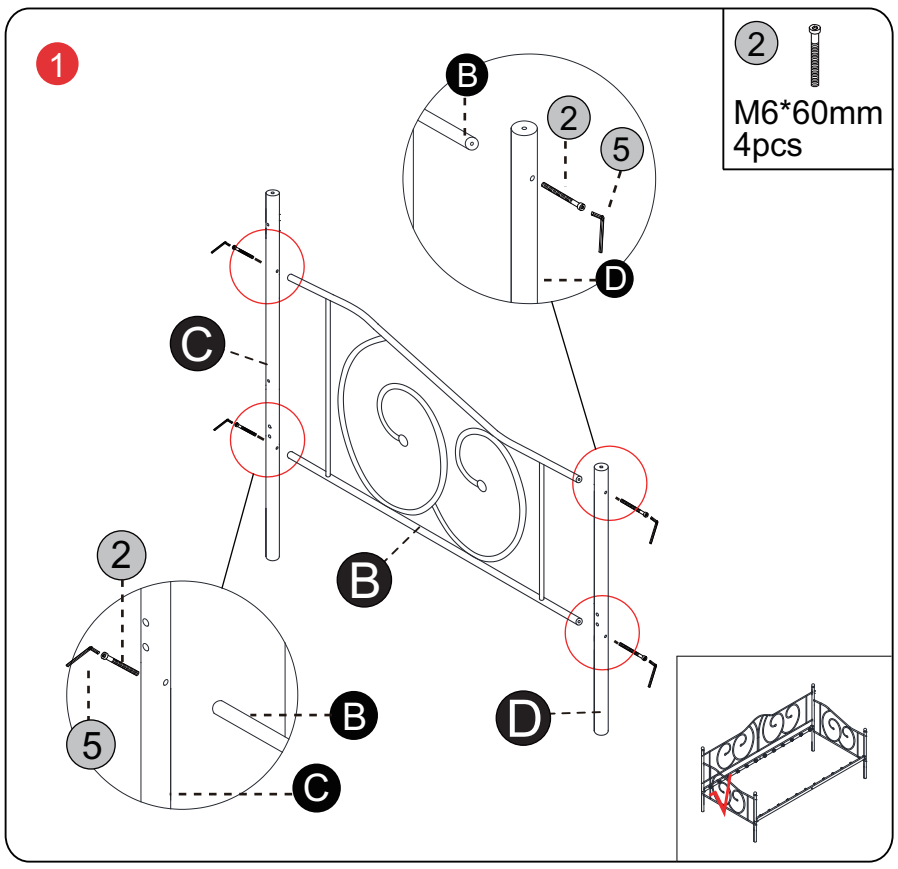

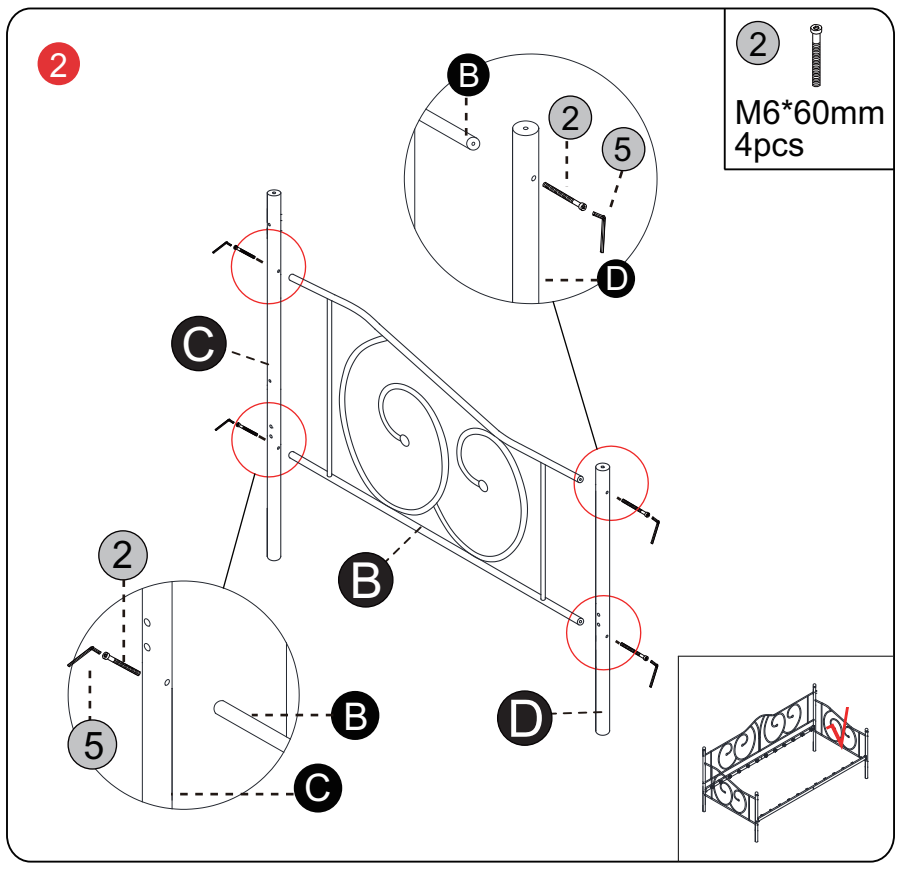

3

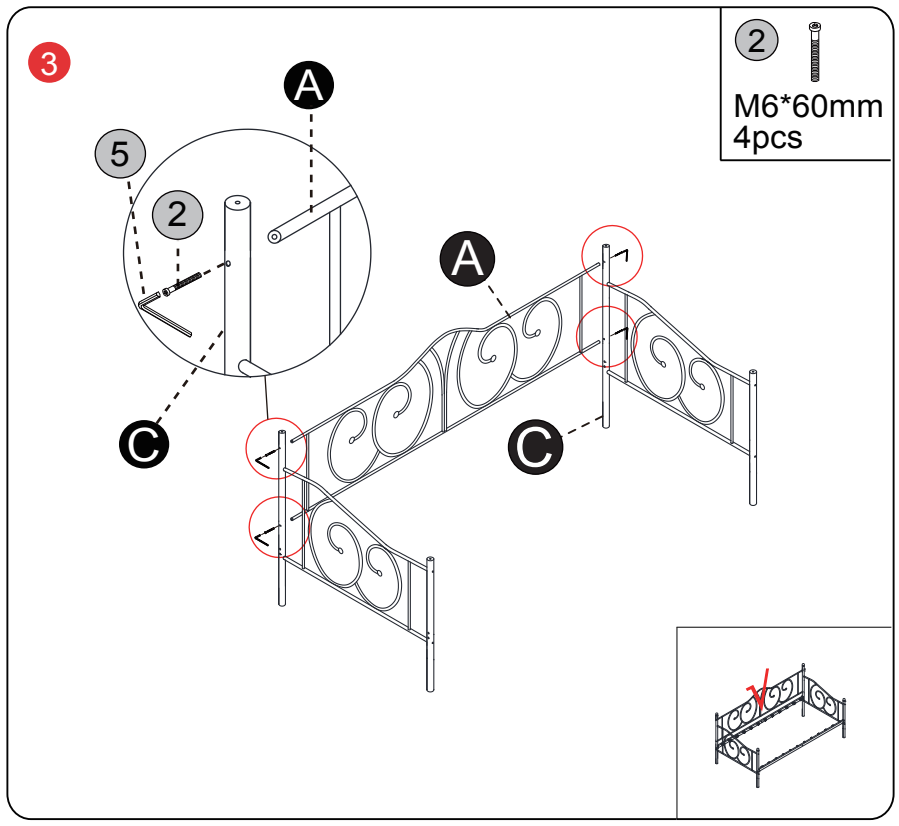

4

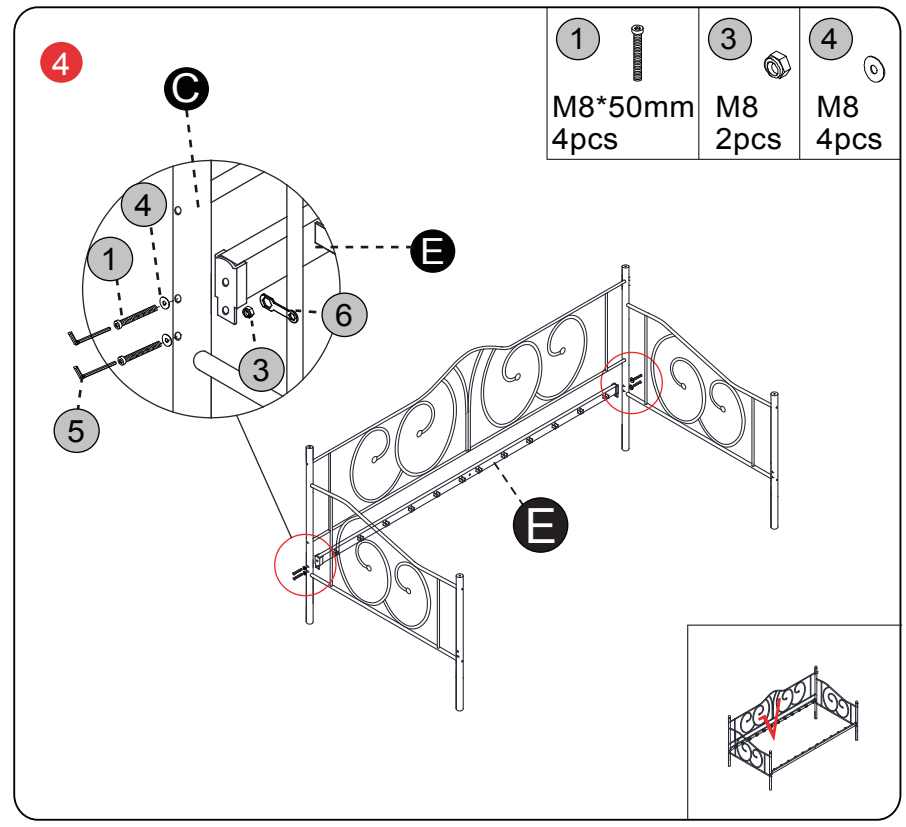

5

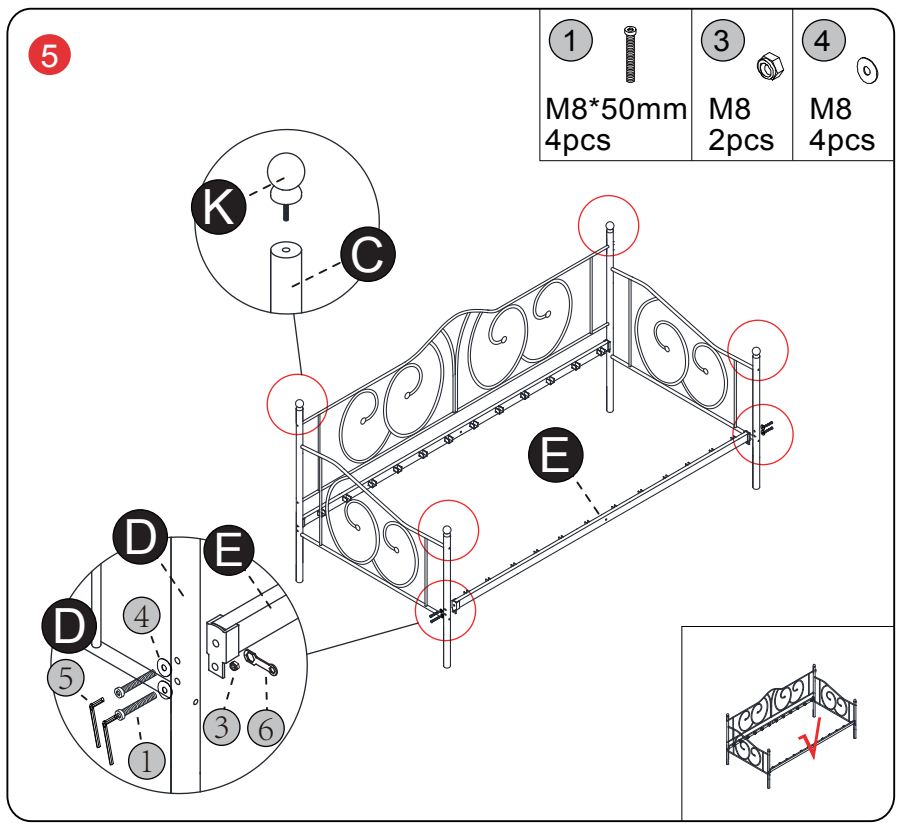

6

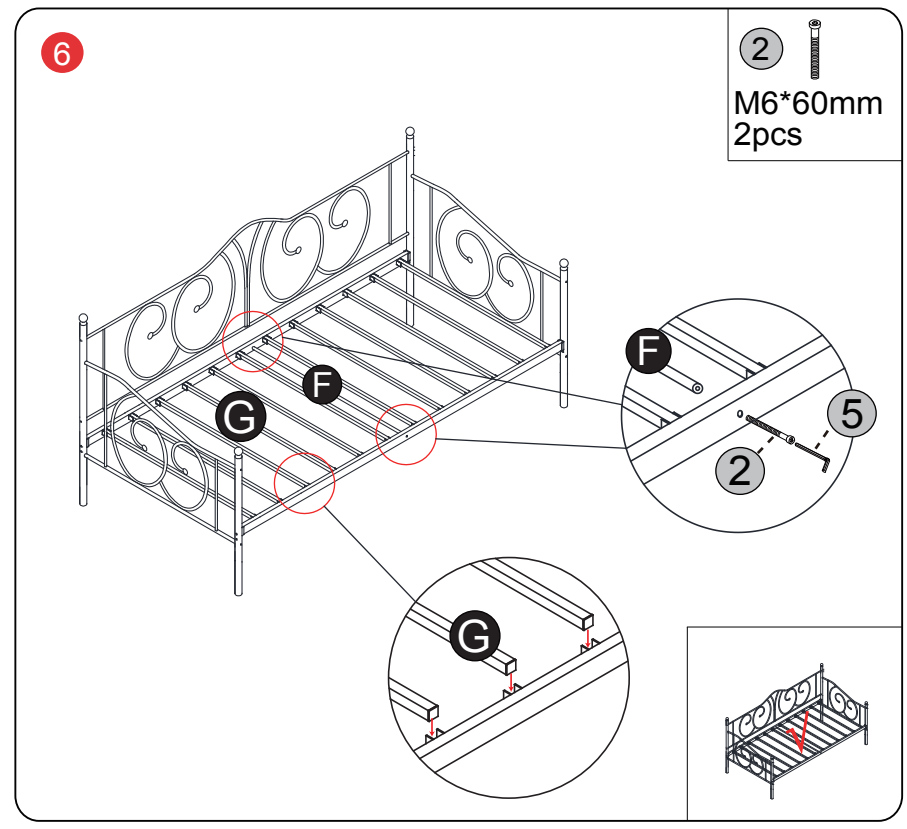

7 Check and tighten all screws

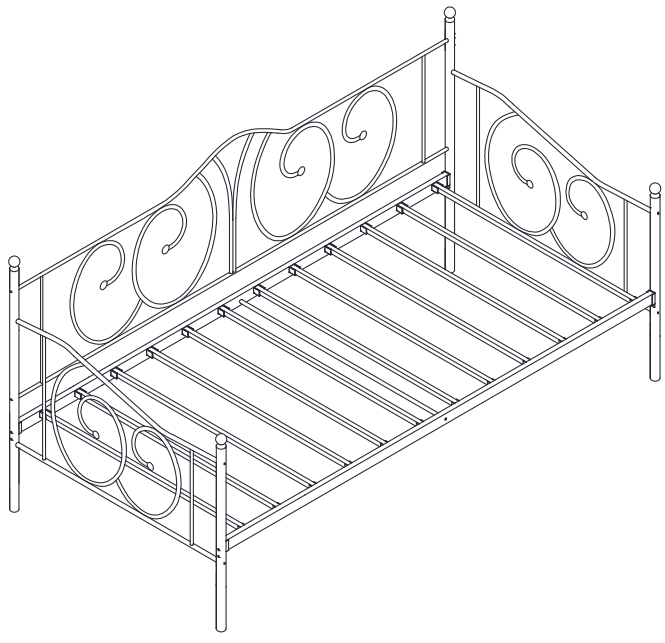
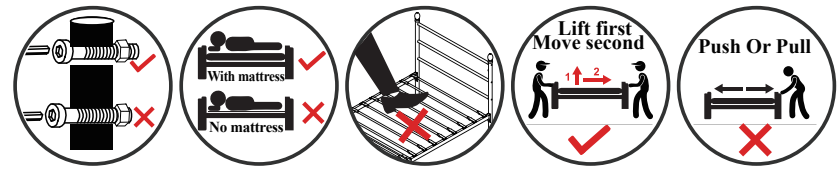
CAUTIONS!