ADJUSTABLE PALLET STAND - PS-4045-CK

APPROX WEIGHT: 278.15 lbs.
DOES NOT INCLUDE WEIGHT OF POWER OR PACKAGING!!!

*** ANY ADDITIONS, DELETIONS, OR OMISSIONS MUST BE CORRECTED ON THIS DRAWING AS THIS DRAWING WILL BE CONSIDERED ALL INCLUSIVE ***
ALL GRAPHICS PROVIDED ARE FOR REFERENCE ONLY. IF CERTAIN DIMENSIONS ARE CRITICAL PLEASE VERIFY THOSE DIMENSIONS WITH YOUR SALESPERSON

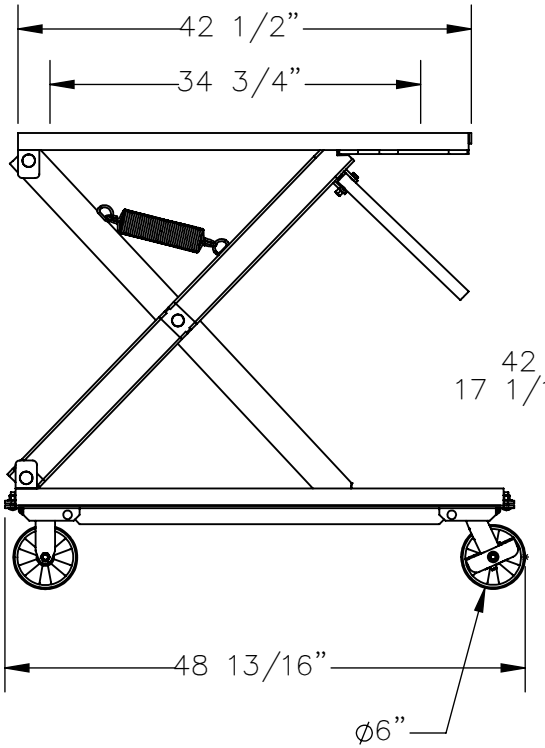

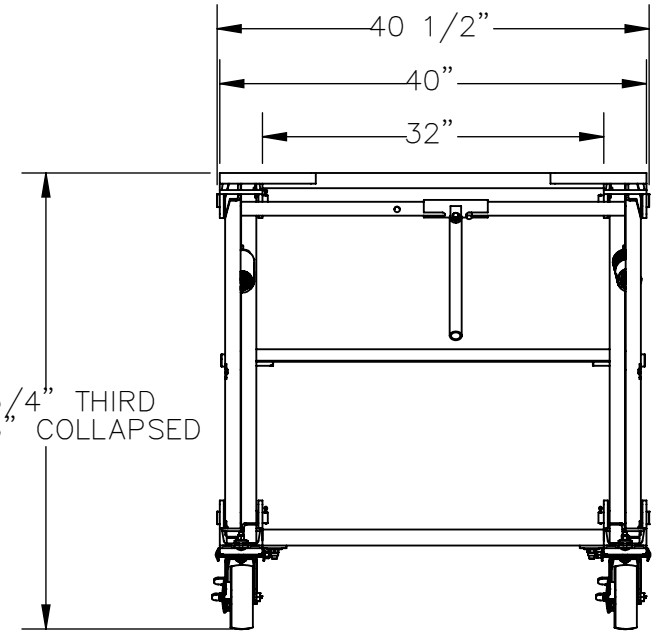

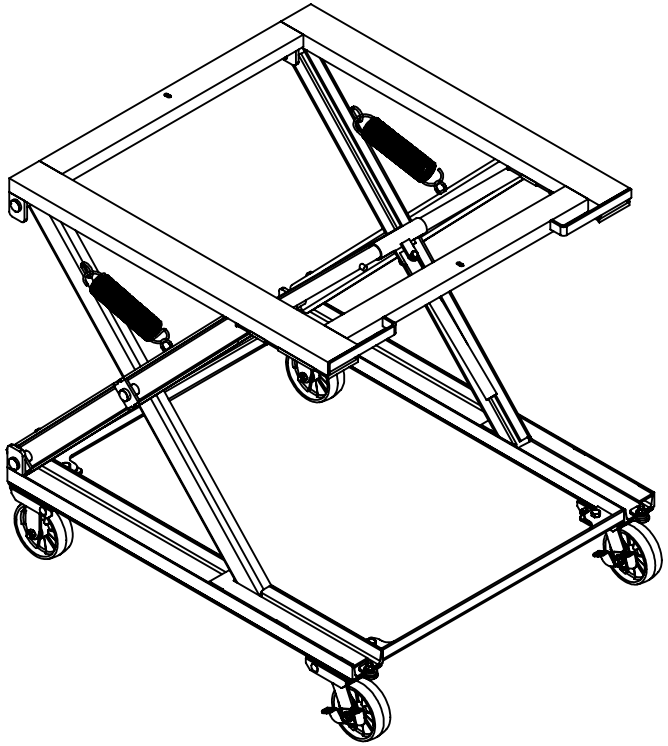

DIMENSION TOLERANCE ± 1/4"

STANDARD FEATURES

MODEL NUMBER IS PS-4045-CK
CAPACITY IS 1,500 POUNDS
OVERALL WIDTH IS 40 1/2"
PLATFORM WIDTH IS 40"
OVERALL LENGTH IS 48 13/16"
PLATFORM LENGTH IS 42 1/2"
THIRD SETTING IS 42 3/4"
SECONDSETTING IS 37 5/16"
FIRST SETTING IS 27 1/16"
COLLAPSED HEIGHT IS 17 1/16"
(4) ∅6" GFN CASTERS - 2 SWIVEL, 2 RIGID
TOUGH BAKED IN POWDER COATED BLUE FINISH

SPECIAL FEATURES

NONE

APPROVAL

I, THE UNDERSIGNED, AGREE THAT THE PRODUCT AS REPRESENTED SATISFIES DESIGN AND DIMENSION REQUIREMENTS. I ALSO ACKNOWLEDGE MY DUTY TO CONFIRM PRODUCT AND INSTALLATION COMPLIANCE WITH ALL APPLICABLE FEDERAL, STATE AND LOCAL REGULATIONS AND STANDARDS.

ANY MODIFIED UNITS ARE NON-RETURNABLE

[ ] As drawn [ ] As marked

Signed:_____Date:_____

Printed Name:_____

LEAD TIME WILL START UPON RECEIPT OF SIGNED APPROVAL DRAWING

FOR INTERNAL USE ONLY PROJECT SIGN OFF	
SALES	
ENG.	
FAB.	
POWER	

DISTRIBUTOR'S NAME: VESTIL MANUFACTURING		P.O.# X
		W.O.# X
DRAWN BY: JLH	DATE: 5/30/18	SALES: X
REFERENCE: X	SCALE: 1:18	FILE NAME: 15-007-149
QUOTED LEAD TIME: X	QUOTE # X	