TV STAND

Product ID. 7LHLG

Scan for Support
service@garvee.jp

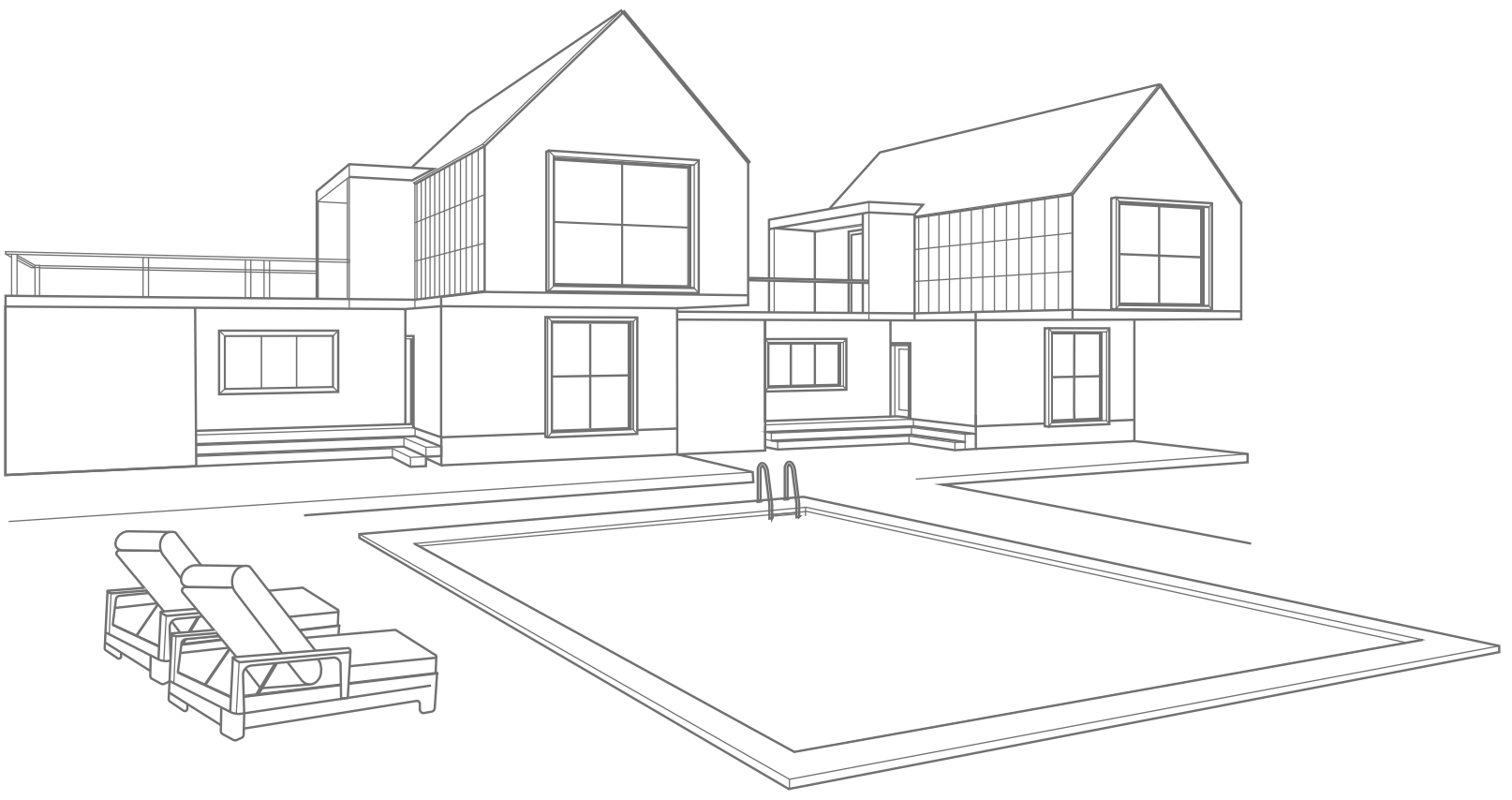

Distributed by

GARVEE.jp

CONTENTS

01 PRODUCT INSTALLATION NOTES

02 PRODUCT INTROSUCTION

03 SAFETY WARNINGS

04—14 INSTALLATION

15 FAQ

Product Installation Notes

Specification

IMPORTANT SAFETY NOTICE: READ CAREFULLY BEFORE BEGINNING ASSEMBLY!

※ Always use proper tools.

※Follow the assembly steps in order. Do not skip any steps.

※Be sure to check all packing materials carefully for small parts may have come loose inside the carton during shipment. If parts are missing, contact the retailer from which you purchased the product to obtain any missing parts. DO NOT USE SUBSTITUTE PARTS.

※Periodically check to ensure that all connectors (bolts, screws, etc.) aretigt Keep the instructions for future reference.

※Some assembly may involve attaching glass or mirrors. Be very careful handling the glass or mirrors, as severe injury may result if the glass or mirror breaks. Never handle large pieces of glass or mirrors by yourself

※When assembling products that have electric cords (lamps, lights, etc.), always (1) make sure the electrical cord is unplugged before assembly and (2) be careful not to twist the electrical cordduring assembly.

※When assembling shelves or entertainment centers, do not stand on lower shelves in order to assemble upper shelves-use a step ladder.

※ Do not stand on tables, including but not limited to, end tables, coffee tables, and dinner tables, as tables are not meant to support the weight of a person.

※Where assembly instructions state that assembly requires two or more people, do not attempt assembly by yourself as there is a risk of injury.

NOTE: YOUR UNIT MAY LOOK DIFFERENT IN APPEARANCE FROM THE ONE SHOWN IN THE ILLUSTRATIONS ON THIS INSTRUCTION SHEET.

PRODUCT INTRODUCTION

Specification

Product Name	TV cabinet
Model/SPU	PHK_385K
Product Size	TWIN
Weight	57.87 lbs(26.25kg)

Componets

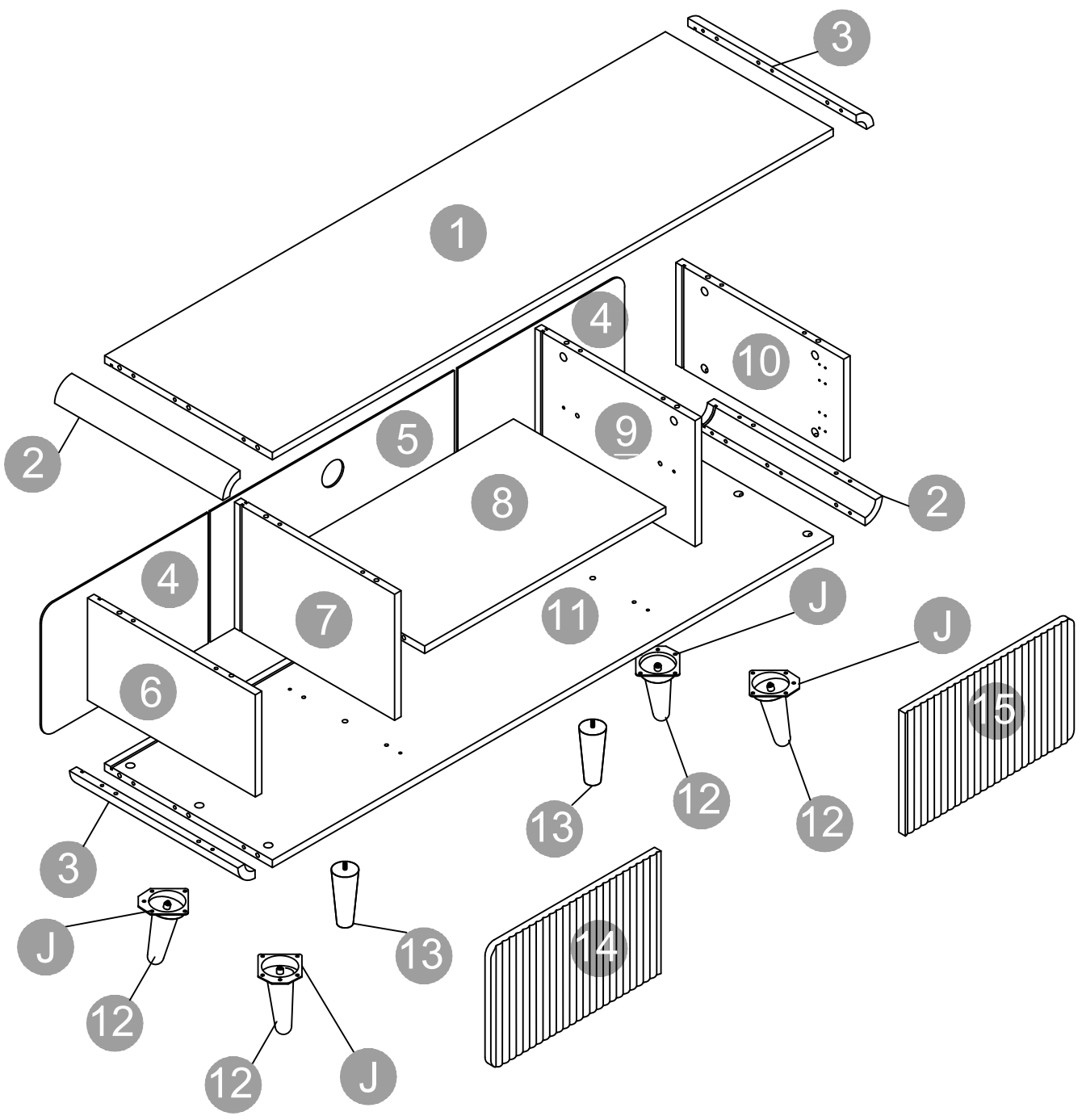

SAFETY WARNINGS

Safety Definitions

IMPORTANT SAFETY INFORMATION

Please carefully read theinstructions and caution warnings below before assembling theproduct.Following this guide will ensure that you install, use and maintainthe product properly.

※Please keep this installation and user manual/instructions for futurereference in case you need to assemble the product.
※Do not assemble if you notice serious damage such as cracks or bends.
※During installation, please use work gloves for hand safety.
※Please assemble the unit on carpeted floor or the flat cardboard box toavoid scratching the surface or your floor while assembling on the floor.
※To assemble, please use the complimentary installation tools (AllenWrench). Pay more attention to the direction of components at eachsteps.
※It is recommended that two people work together to assemble theproduct.
※Please do not tighten the screws up too much, just to 80% before youfinish to make the installation go on successfully.

RETURN POLICY

We believe you will absolutely love your new product.But for some reason you want to return your item, please contact uswithin 30 days after receiving and ensure that the product which you wantto return is in a good condition in the original box with all originalcertificates of purchase, manuals and accessories attached.

HOW TO MAINTAIN YOUR PRODUCT:

※Check the screws of the product are not loose from regular use.
※Do not use sharp instruments, rubbing alcohol, corrosive chemicals, orabrasive cleaners to clean the product.
※Do not keep the product in a damp environment for a long period of time. The damp environment may cause the iron components to rust and theplates to bulge and crack.

INSTALLATION

Parts List

1 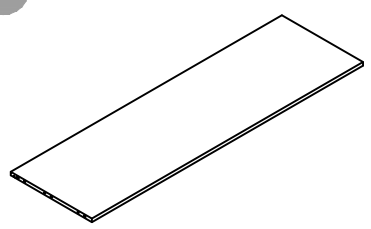 x1	2 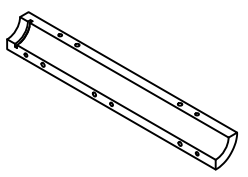 x2	3 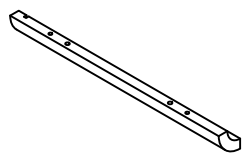 x2	4 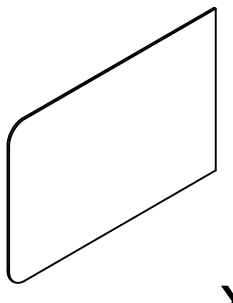 x2
5 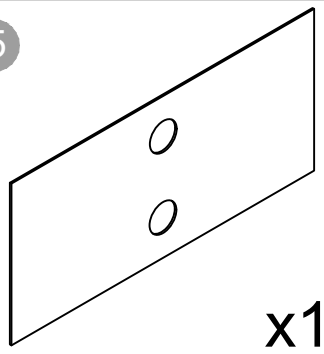 x1	6 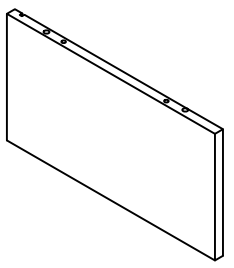 x1	7 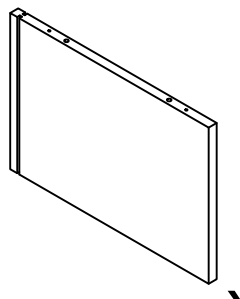 x1	8 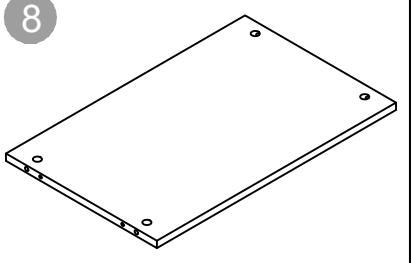 x1
9 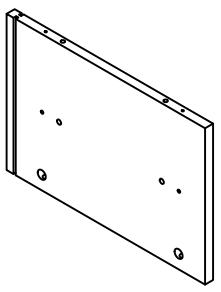 x1	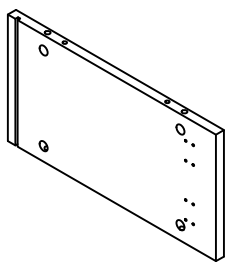	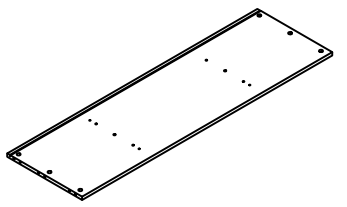 x1	12 x4
13  x2	14 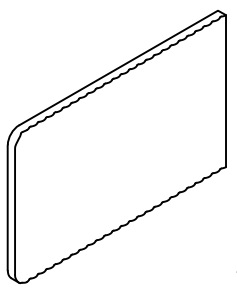 x1	15 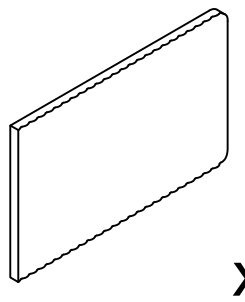 x1	

A ×28+2 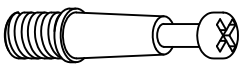 ϕ 6x32	B ×32+2 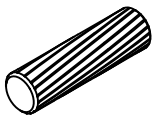 ϕ 6x30	C ×28+2  ϕ 15x9. 5	D ×24+2 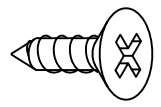 Ø3.5x12
E ×4 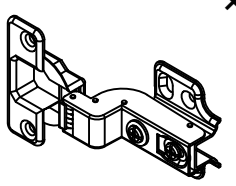 ϕ 35	F ×4  M4x35	G ×2 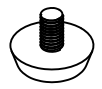 ϕ 15x6	H ×20+2 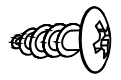 M4x12
I ×4 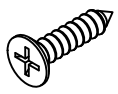 ϕ 3x12	J ×2 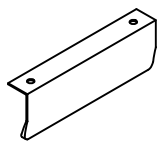	K ×4 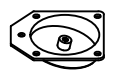	

Step1

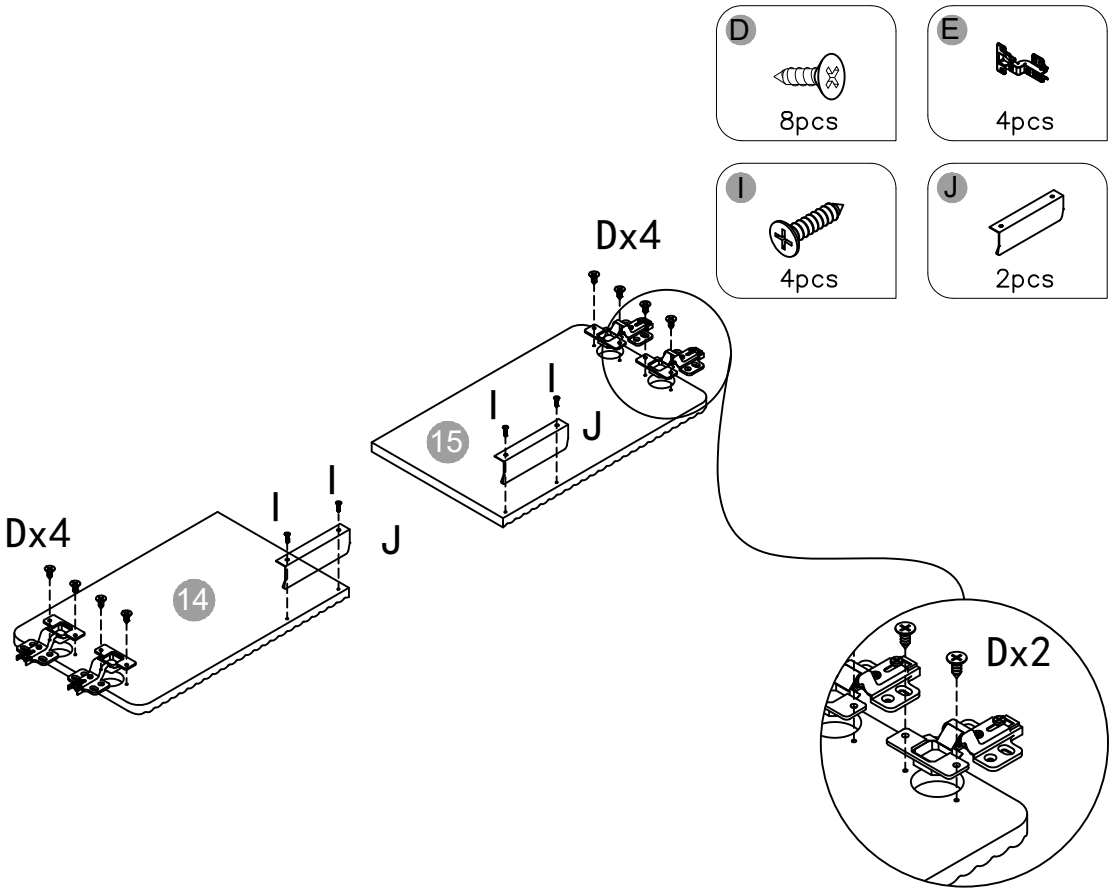
D
8pcs
E
4pcs
I
4pcs
J
2pcs
Dx4
I
I
I
J
15
Dx4
I
I
J
14
Dx2

Step2

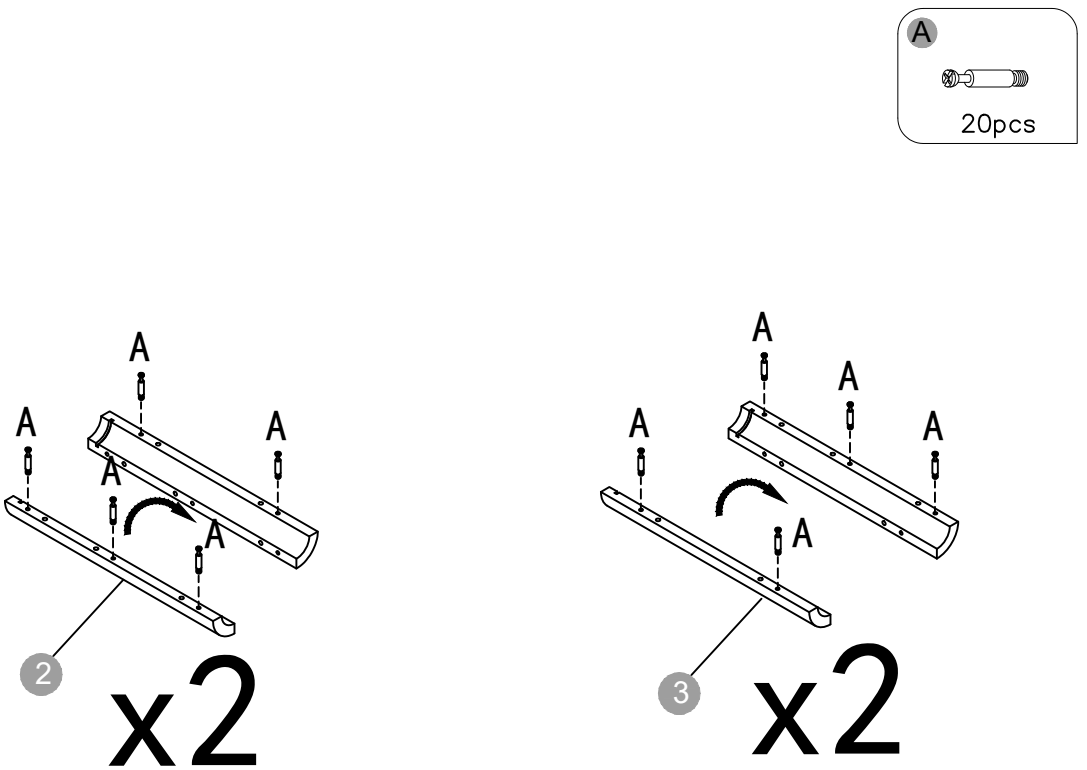
A
20pcs
A
A
A
A
A
2
x2
A
A
A
A
A
3
x2

Step3

A

4pcs

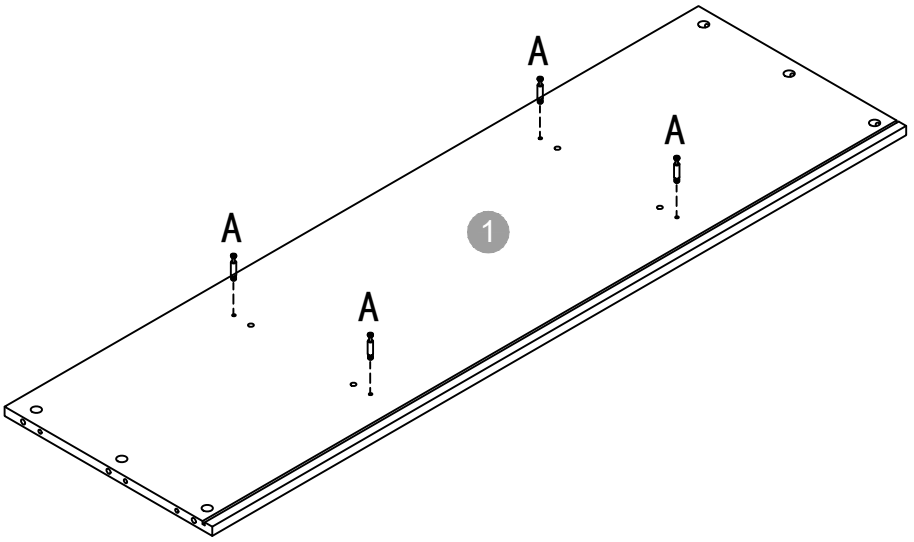

Step4

A



4pcs

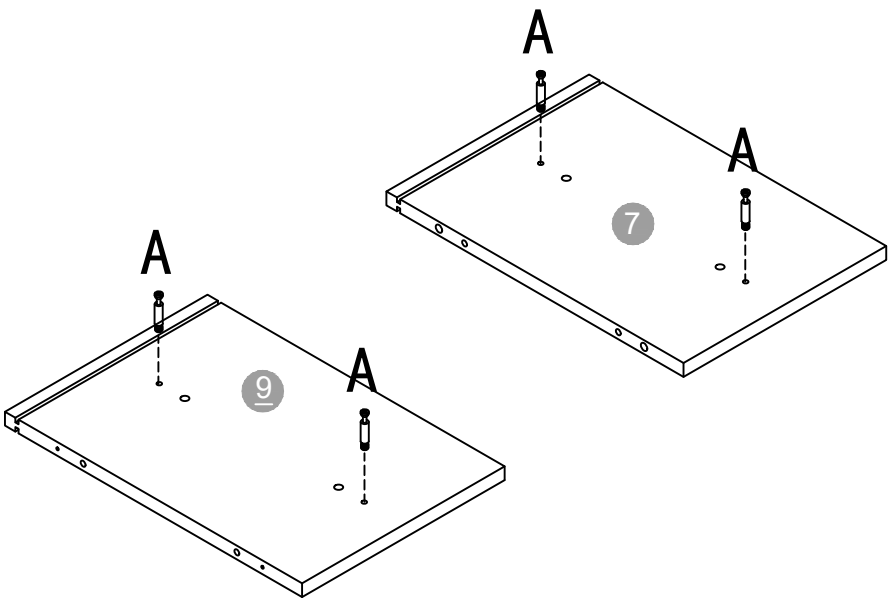

Step5

B 2pcs

C 2pcs

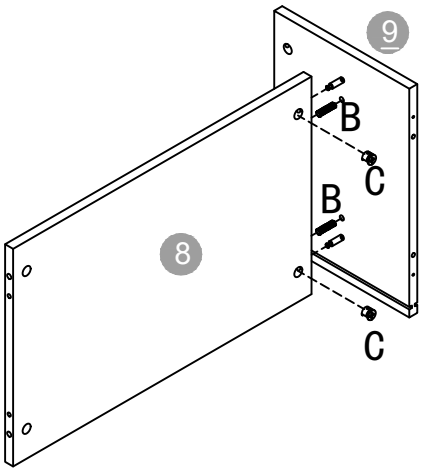

Step6

B 2pcs

C 2pcs

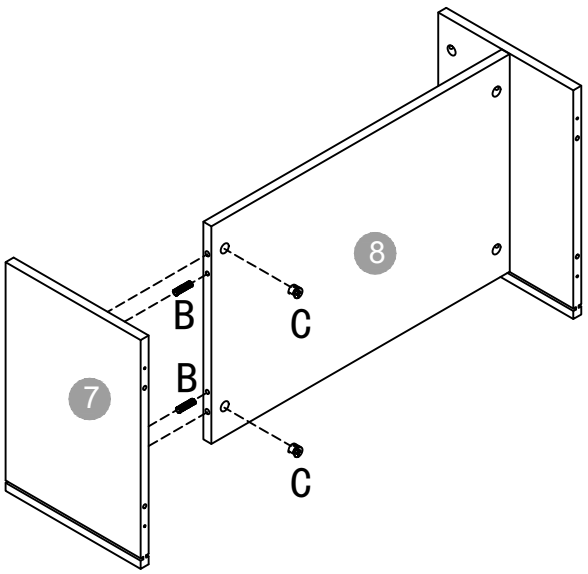

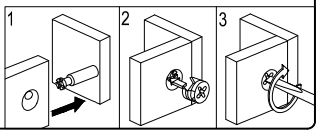

Step7

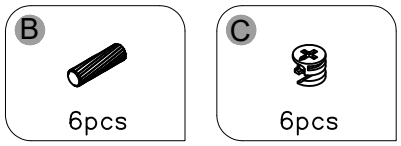
B
6pcs
C
6pcs

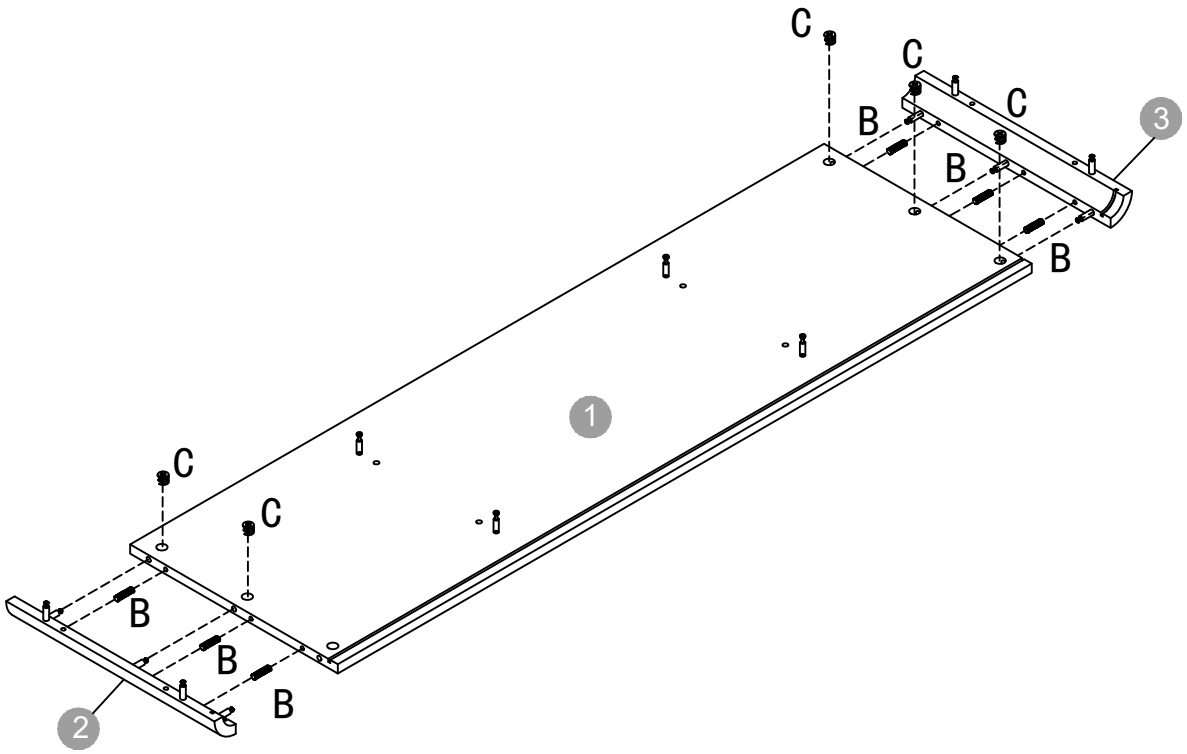
C
C
C
B
B
B
3
1
C
C
B
B
B
2

Step8

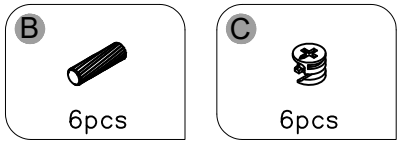
B
6pcs
C
6pcs

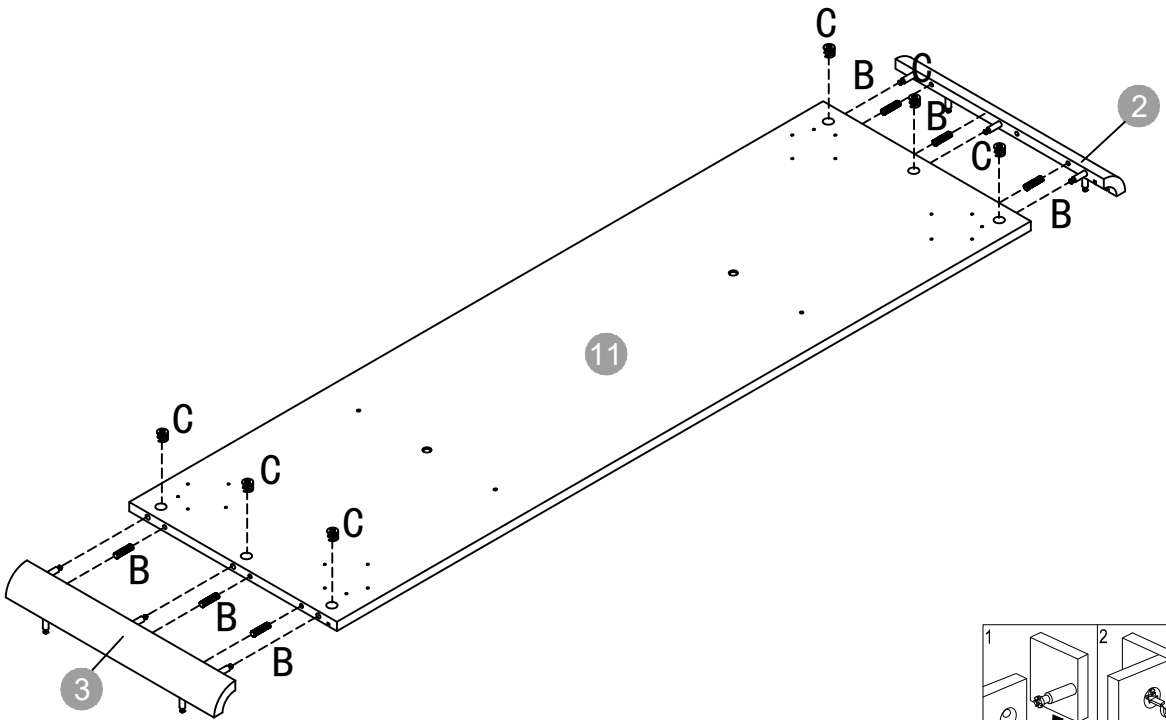
C
B
C
B
C
B
2
11
C
C
C
B
B
B
3

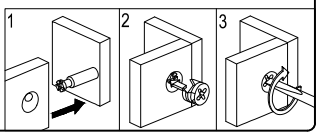
1
2
3

Step9

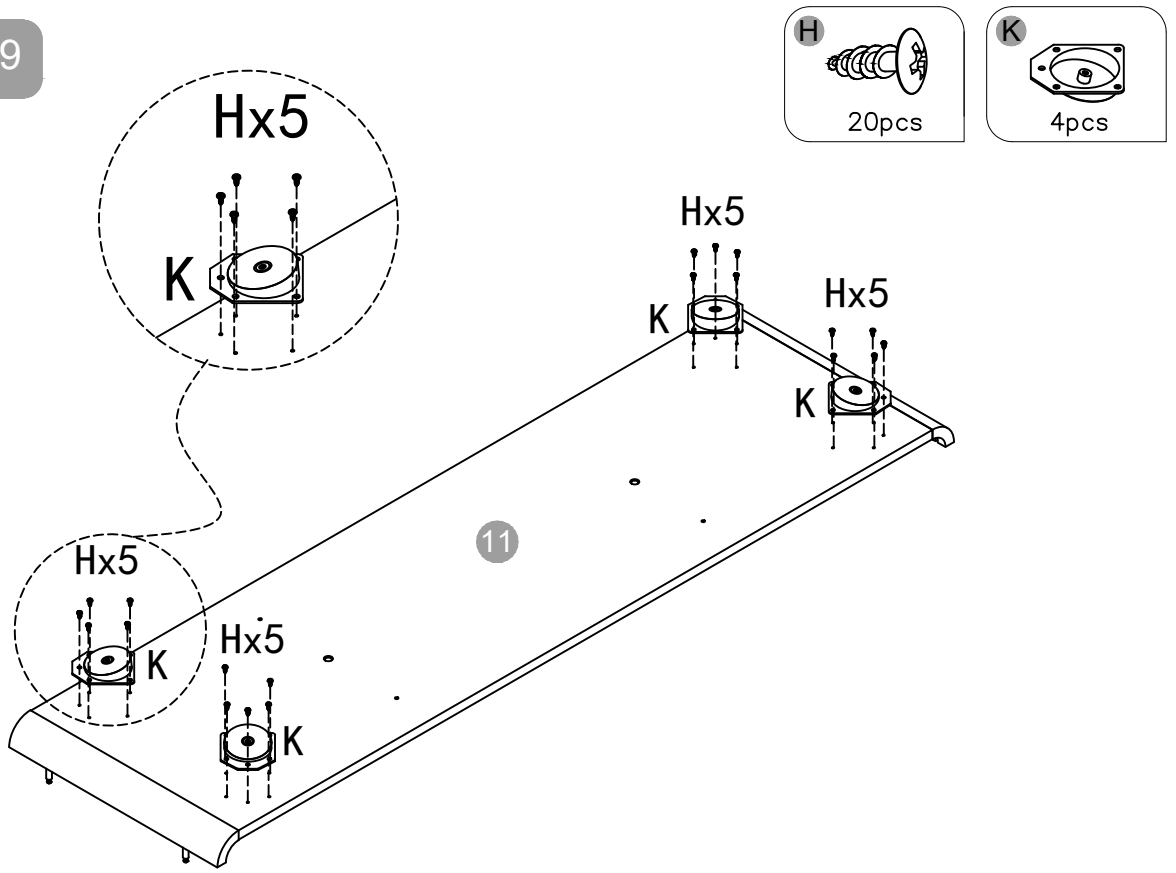

Step10

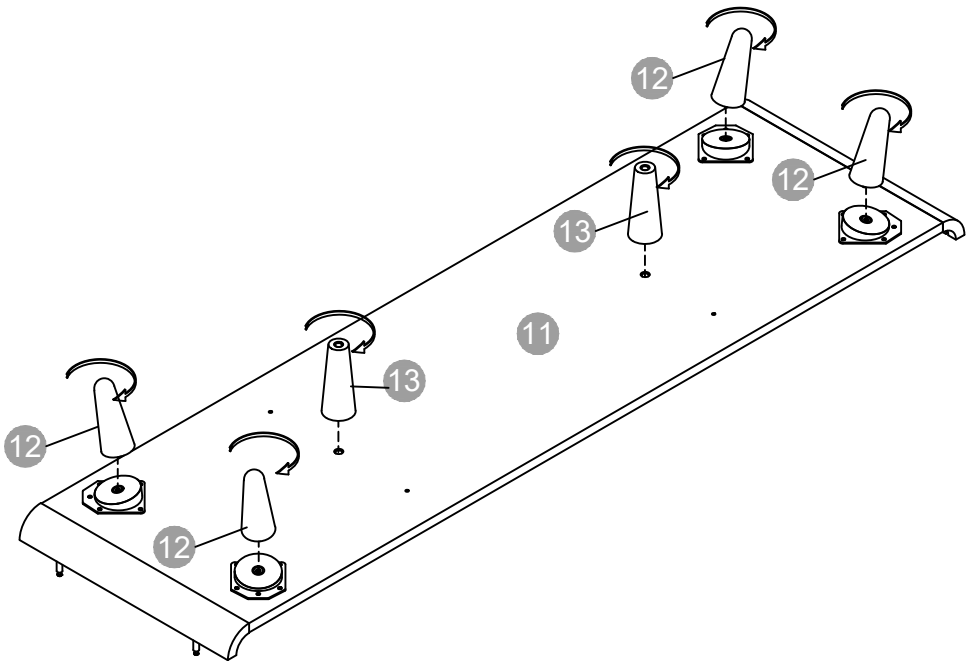

Step11

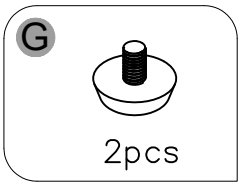

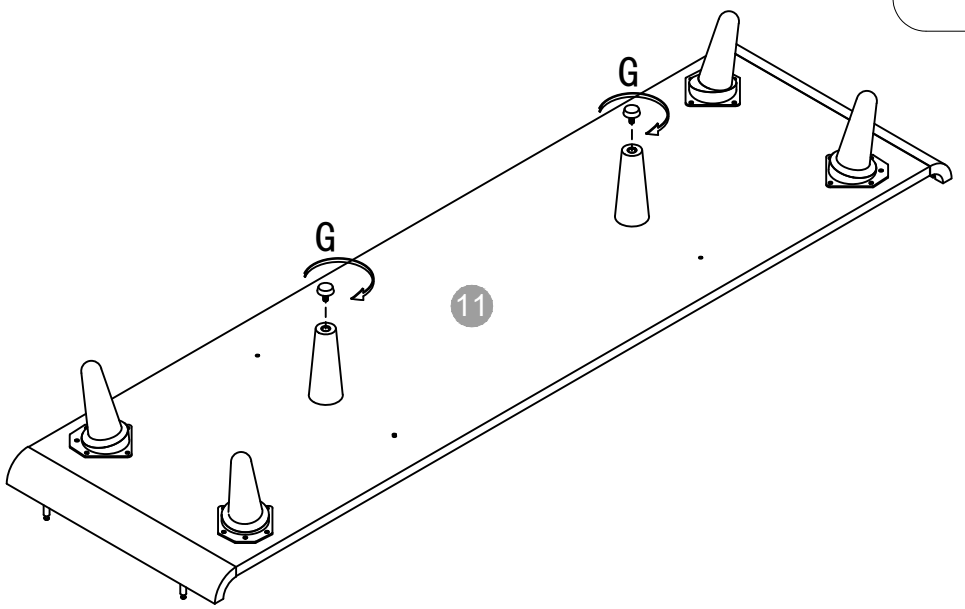

Step12

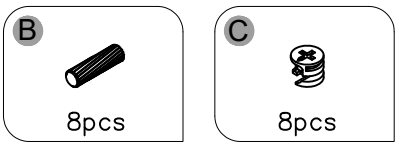

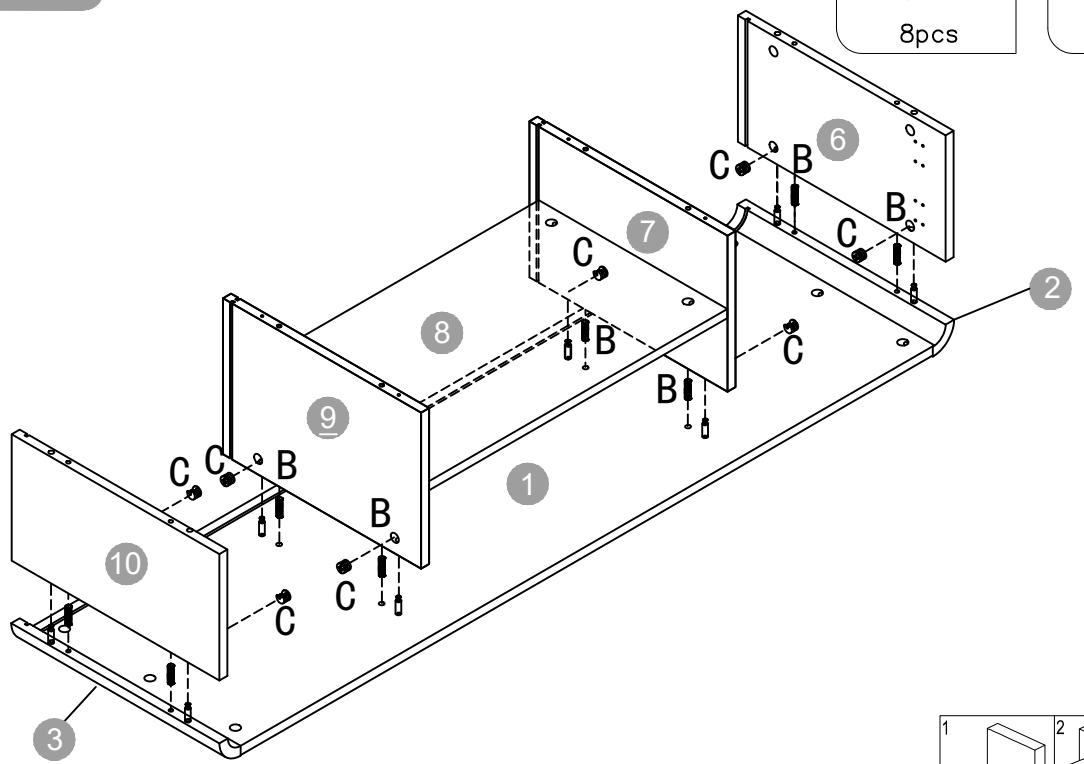

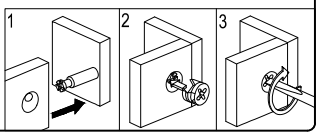

Step13

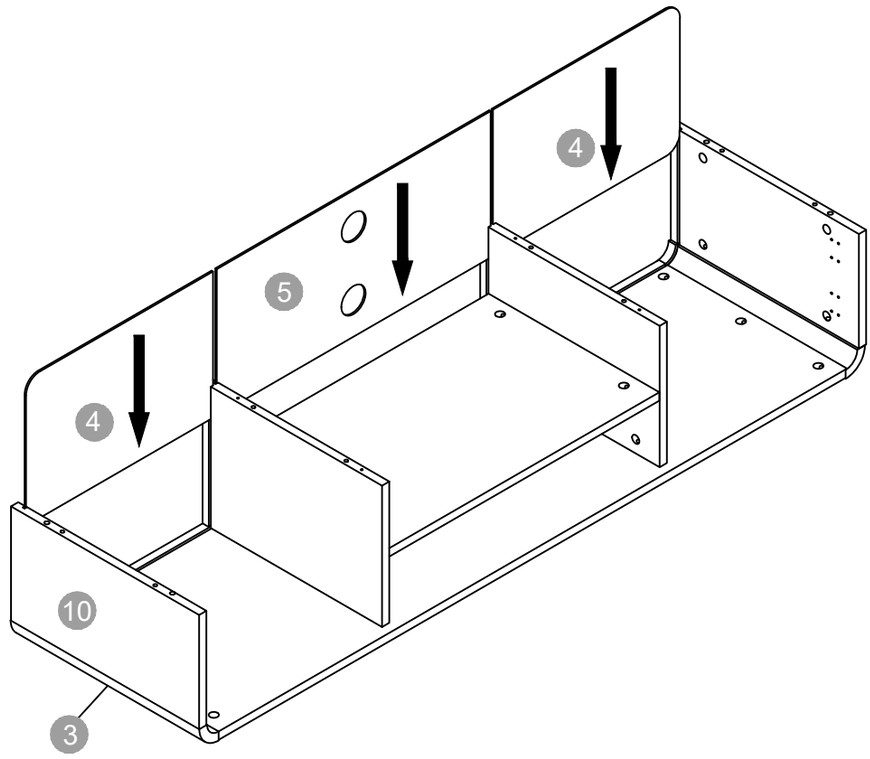

Step14

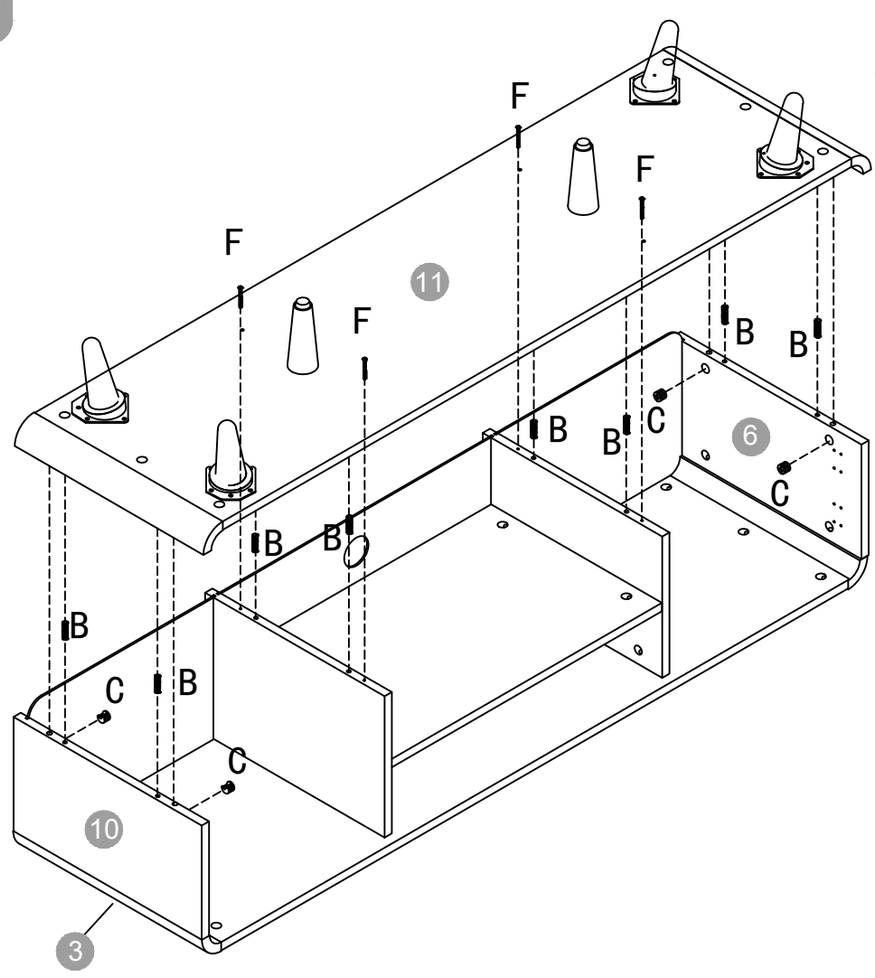

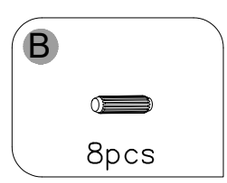

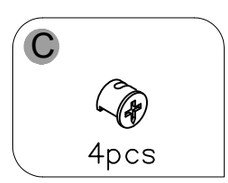

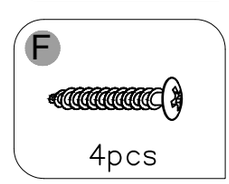

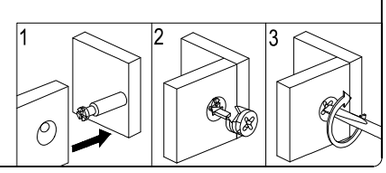

Step15

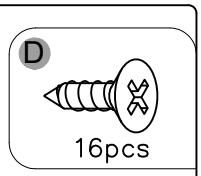

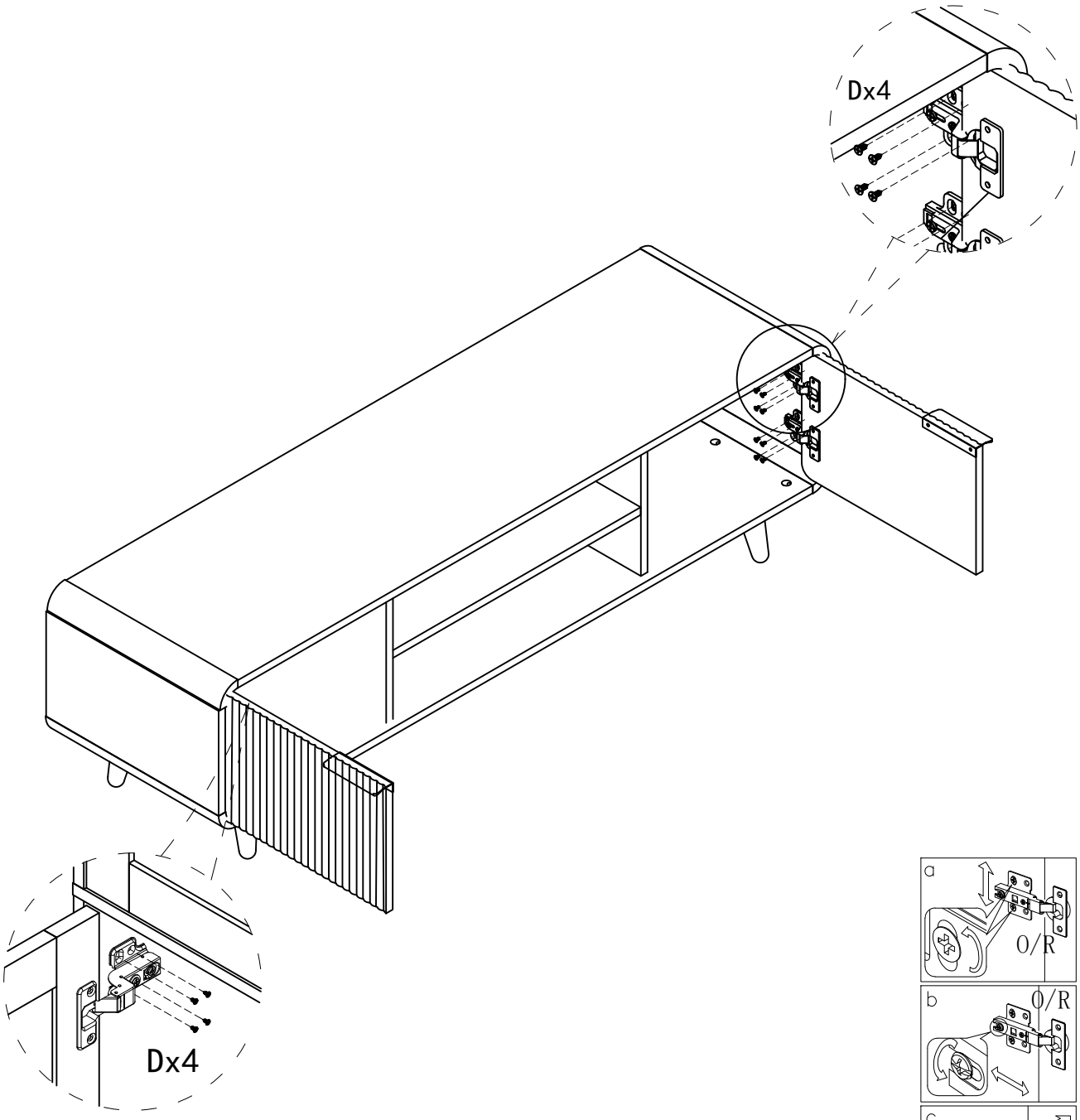

Step16

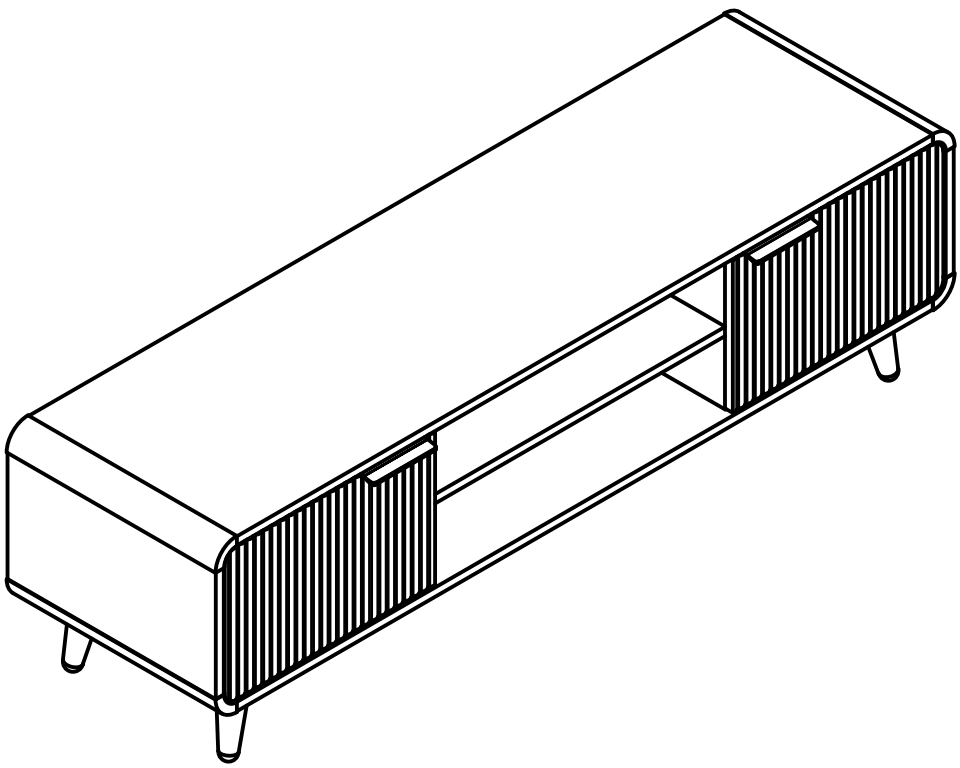

FAQ

Q How to find us?

A Customer Service **Email: support@garvee.com**

Q When you encounter problems while using the product:

A **Trouble shooting**

Missing / Wrong / Broken parts and installation issues

Send email with your question, pic and order NO. to support@garvee.com

Respond within 24 hours

Issue resolved

GARVEE

support@garvee.com

GARVEE

service@garvee.jp