Seven Drawer Dresser

DJ0852-160CM

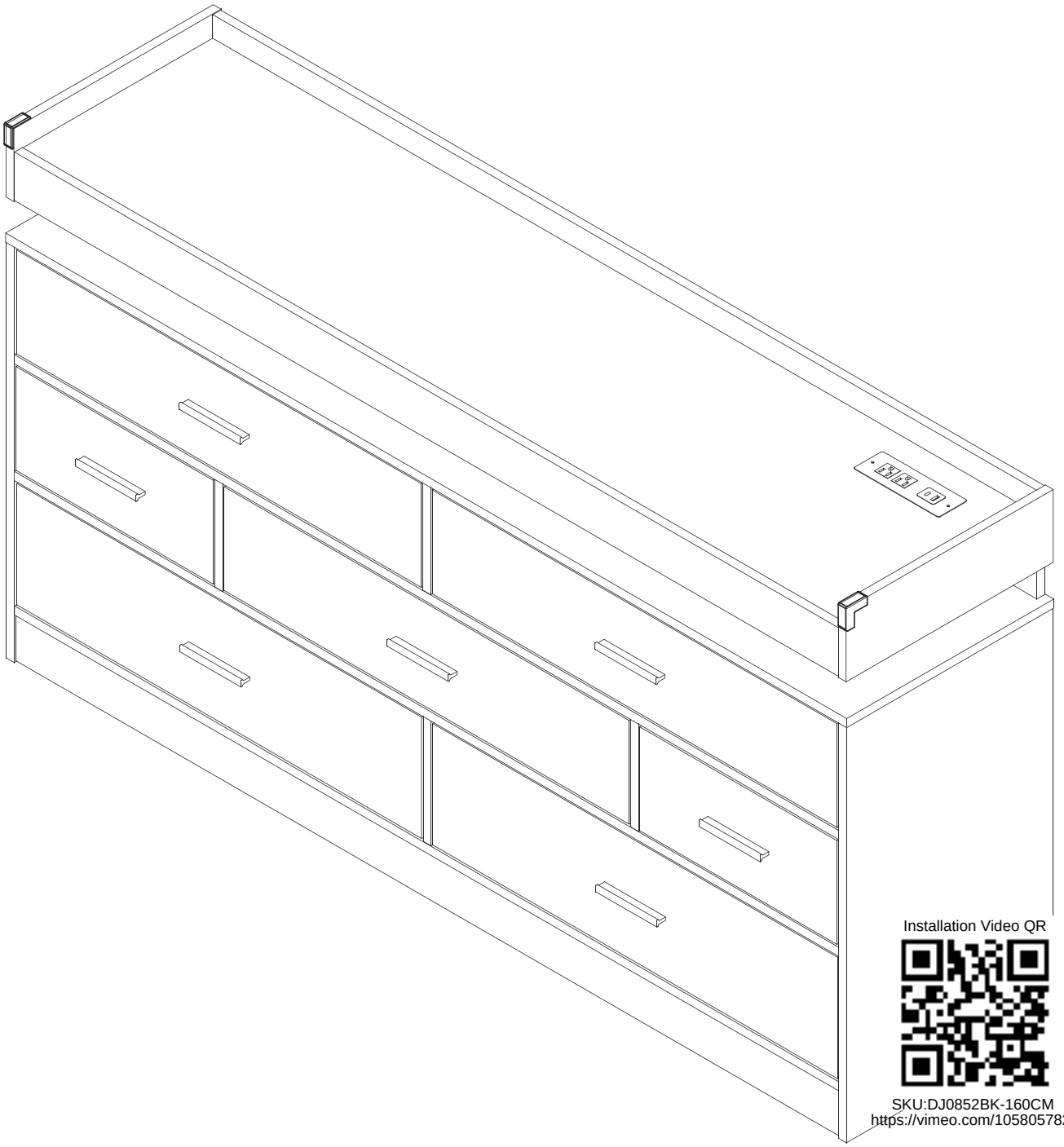

Installation Video QR

SKU:DJ0852BK-160CM
https://vimeo.com/1058057829

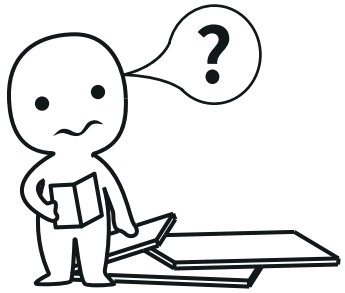

IMPORTANT INFORMATION!

please read the entire manual before starting to assemble and/or using this product.follow the manual thoroughly and keep it for further reference.



AVOID SCRATCHES!

In order to avoid scratching this furnuture should be assembled on a soft layer-could be a rug.



IMPROVE EFFICIENCY !

Try to find a partner to install with you, which can speed up the installation efficiency and shorten the time.

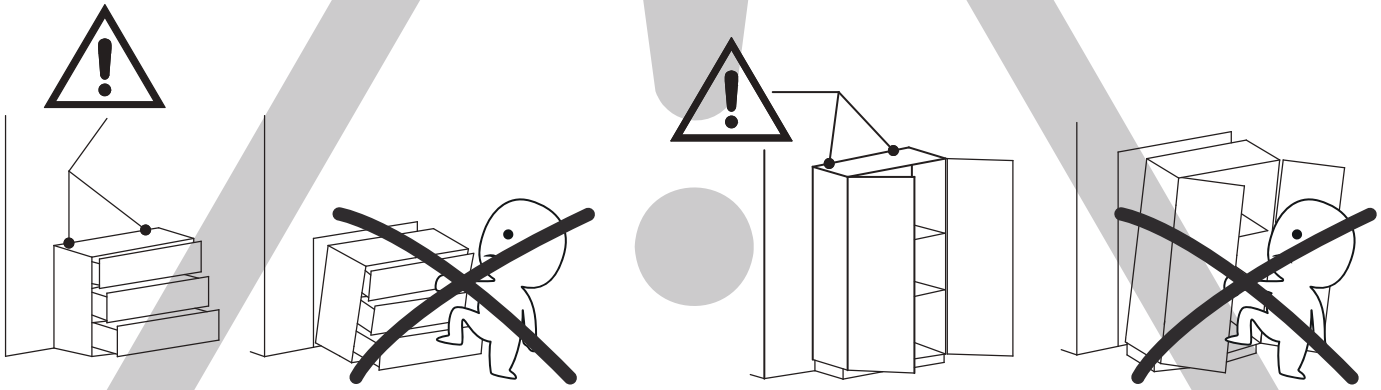

ANTI-TOPPLE WARNING !

Overturned furniture can cause serious or fatal crush injuries. To prevent tipping over, be sure to use the wall attachment, if not included with this product. Please purchase the wall attachment that fit your wall. If unsure, seek professional advice. Please read and follow each step of the instructions carefully.

IMPORTANT !

It is important that any product which is assembled using any kind of screw is re-tightened 2 weeks after assembly,and once every 3 months - in order to assure stability through-out the lifespan of the product.

For regular maintenance and cleaning of the product, for the frame, please use a rag dipped in neutral detergent to fully wipe it, and then dry it with a clean rag.For glass materials, wipe with a rag dampened with water glass cleaner, and then dry with a dry rag.

Please use proper tools for assembly.Using an electric screwdriver can accelerate the assemoly speed, but please do not overtighten the screws.

Board Identification

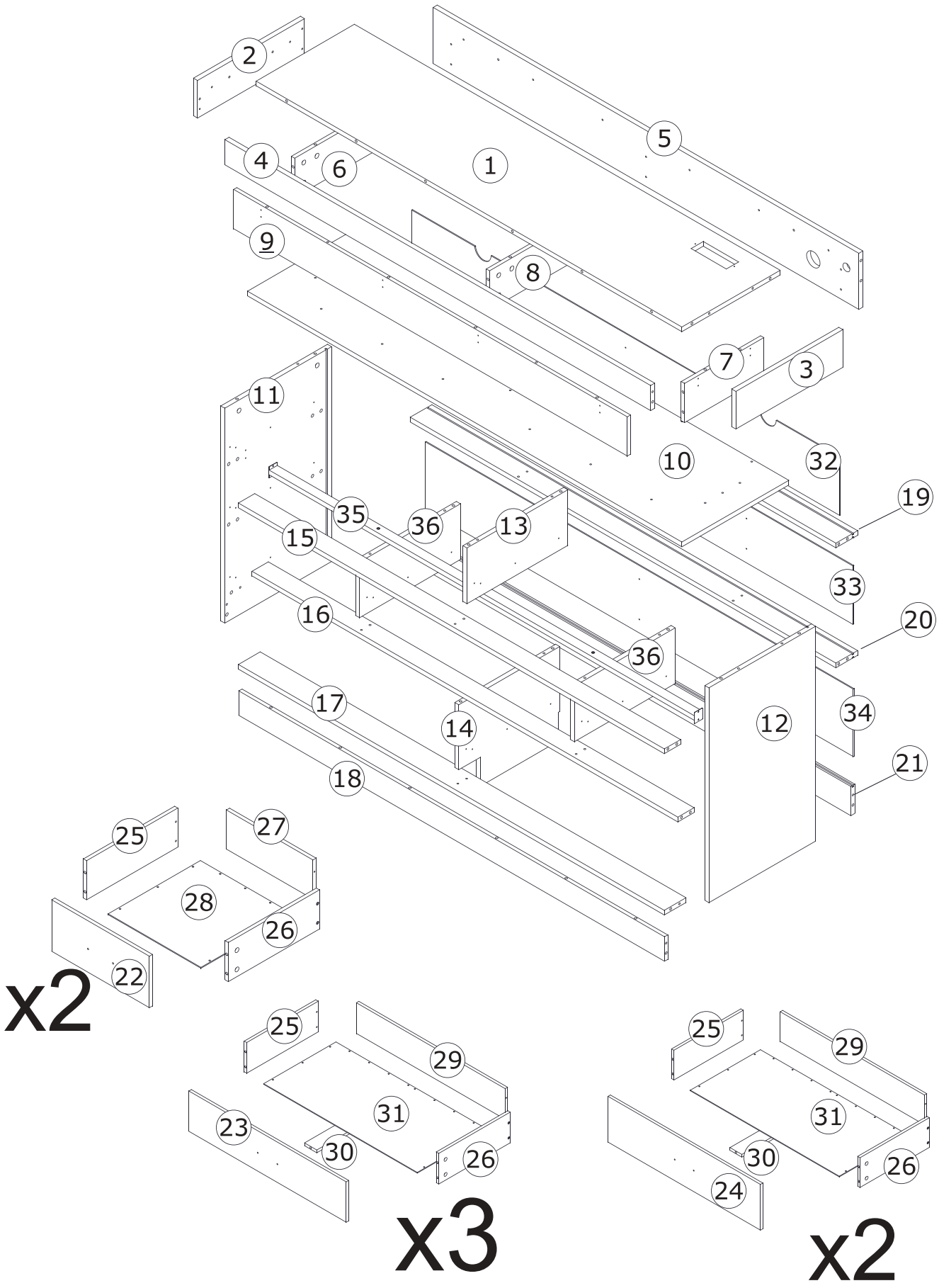

PARTS LIST

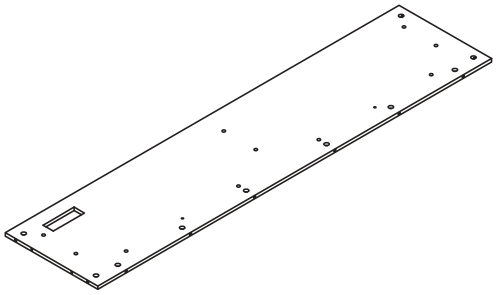

1

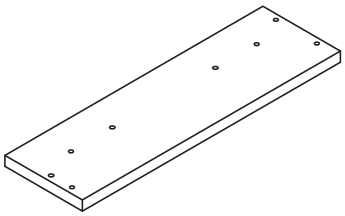

2

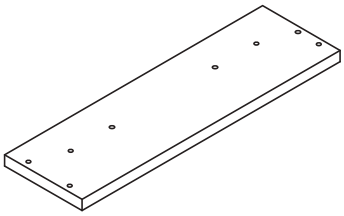

3

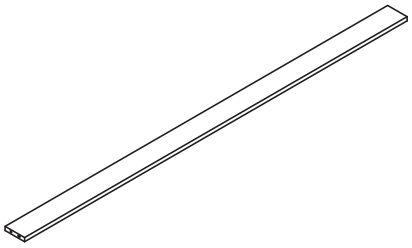

4

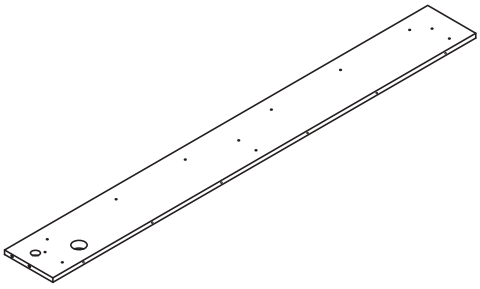

5

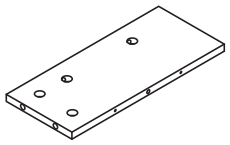

6

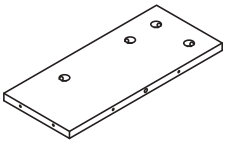

7

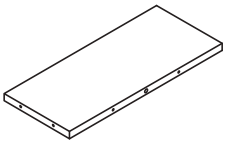

8

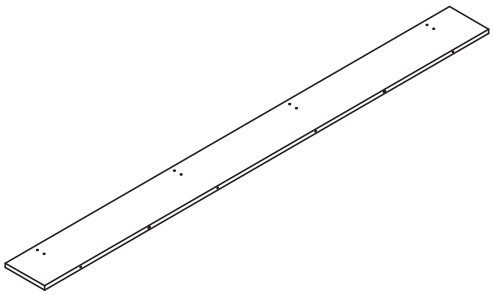

9

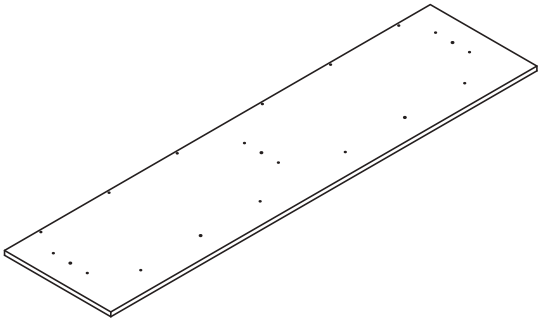

10

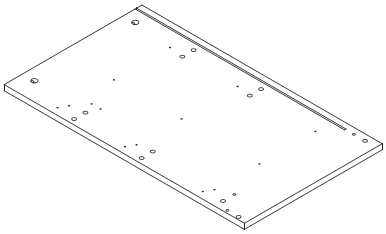

11

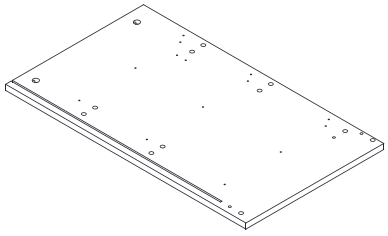

12

PARTS LIST

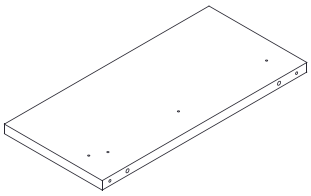

⑬

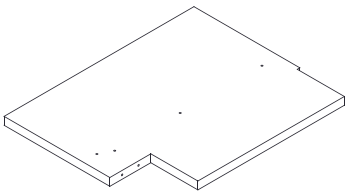

⑭

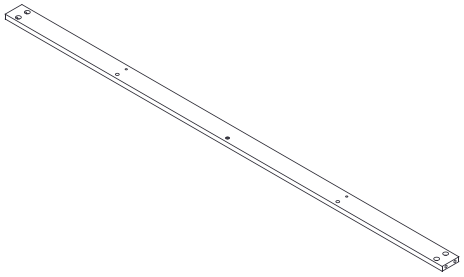

⑮

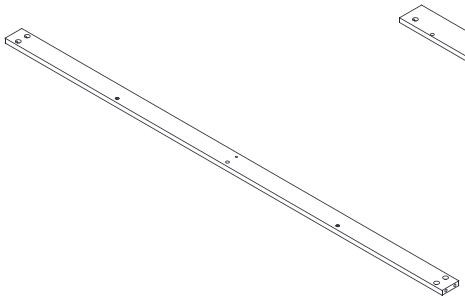

⑯

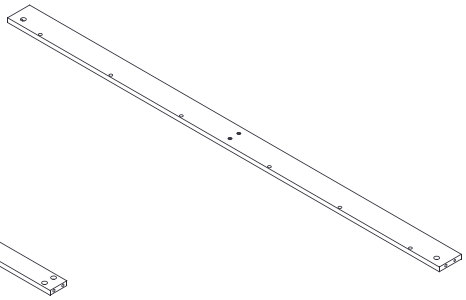

⑰

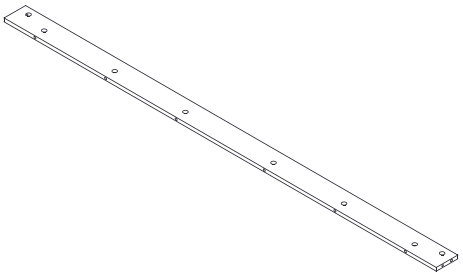

⑱

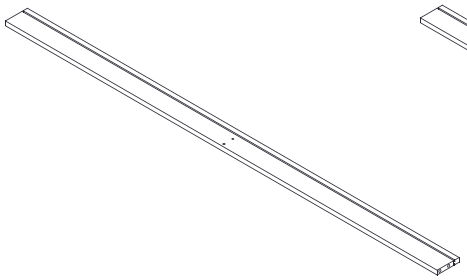

⑲

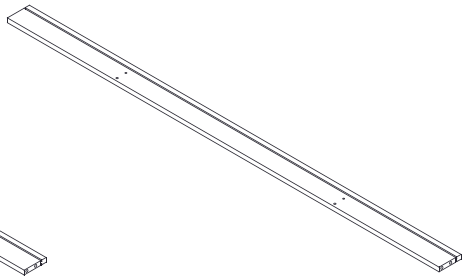

⑳

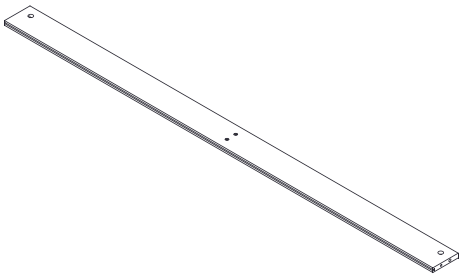

㉑

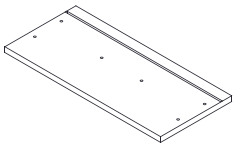

㉒ x2

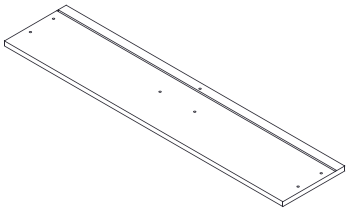

㉓ x3

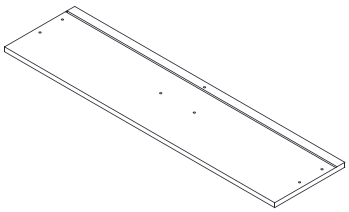

㉔ x2

PARTS LIST

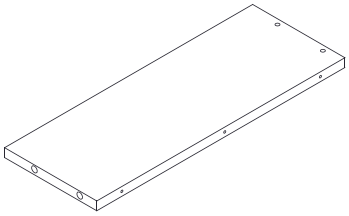

(25) x7

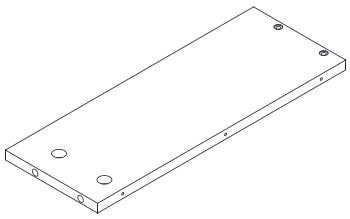

(26) x7

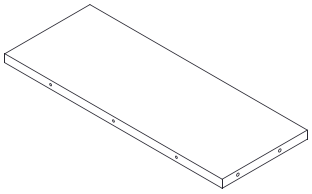

(27) x2

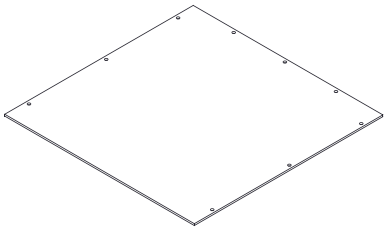

(28) x2

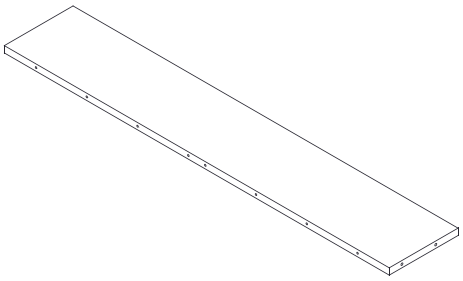

(29) x5

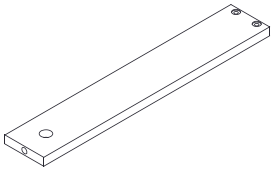

(30) x5

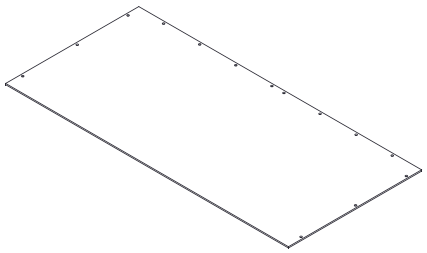

(31) x5

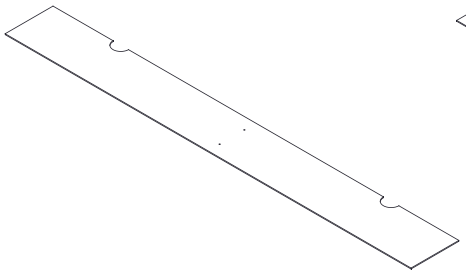

(32)

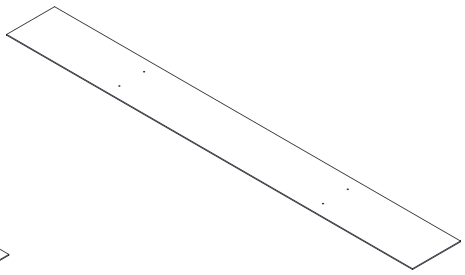

(33)

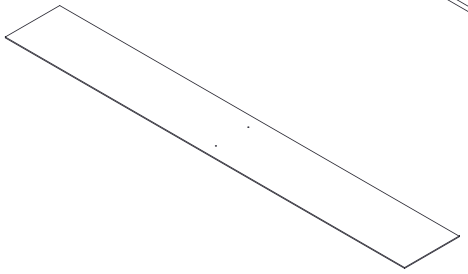

(34)

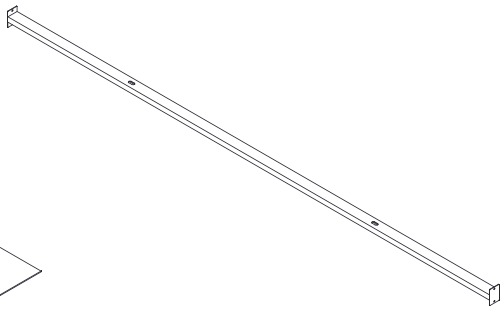

(35)

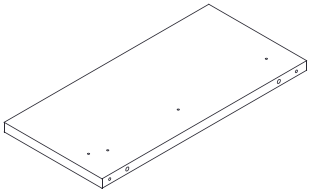

(36) x2

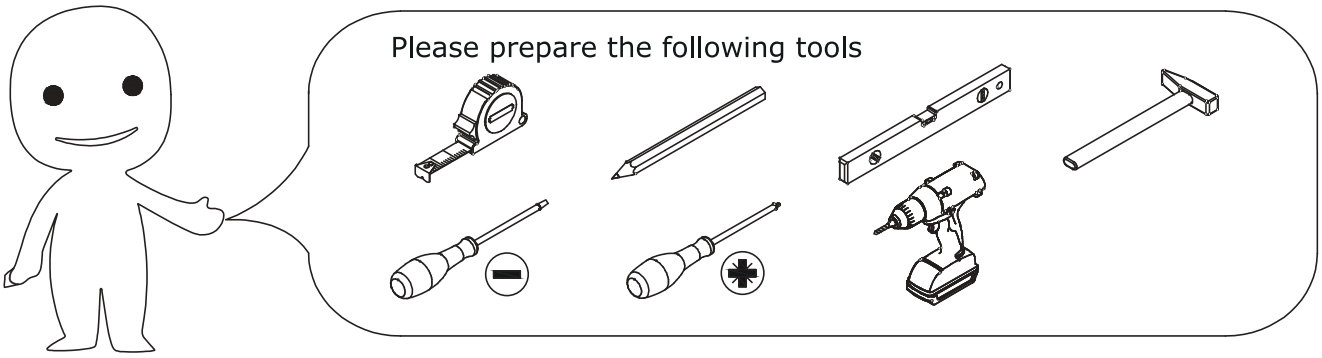

When installing, please carefully confirm whether each screw corresponds to the manual, accessories with similar shapes can be distinguished by size

Tips:The number after "+" represents the spare hardware.

A x 105	B x 41	C x 39	D x 60
∅15 x 9.5 mm	∅7 x 40 mm	∅6 x 30 mm	∅3.5 x 14 mm
E x 7	**F x 8**	**G x 38**	**H x 24**
∅4 x 16 mm	∅ 4 x 14 mm	∅5 x 40 mm	
I x 38	**J x 105**	**K x 64**	**L x 1**
∅4 x 35 mm		∅7 x 40 mm	
M x 10	**N x 2**	**O x 1**	**P x 2**
	N-1 N-2 N-3 N-4		
Q x 78	**R x 2**	**CL+CR+DL+DR**	
∅3.5 x 16 mm	∅ 4 x 30 mm	350mm X 7	
S x 2			
∅3.5 x 12 mm	+ 2 SPARE BAG		

Please note during installation that the distance between the edges of the board is small, and it is the straight opening direction of the plastic particles. Do not install it incorrectly!

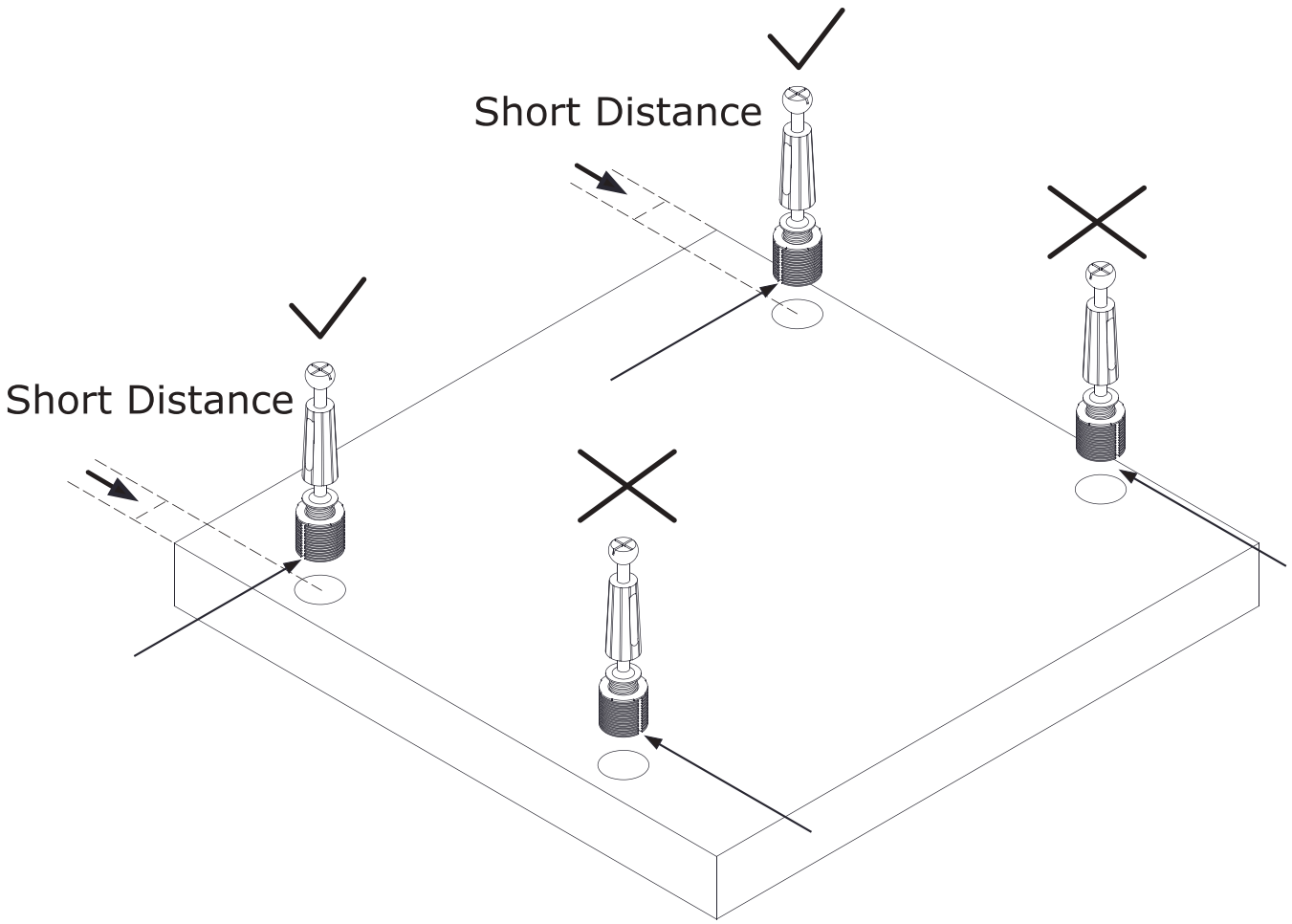

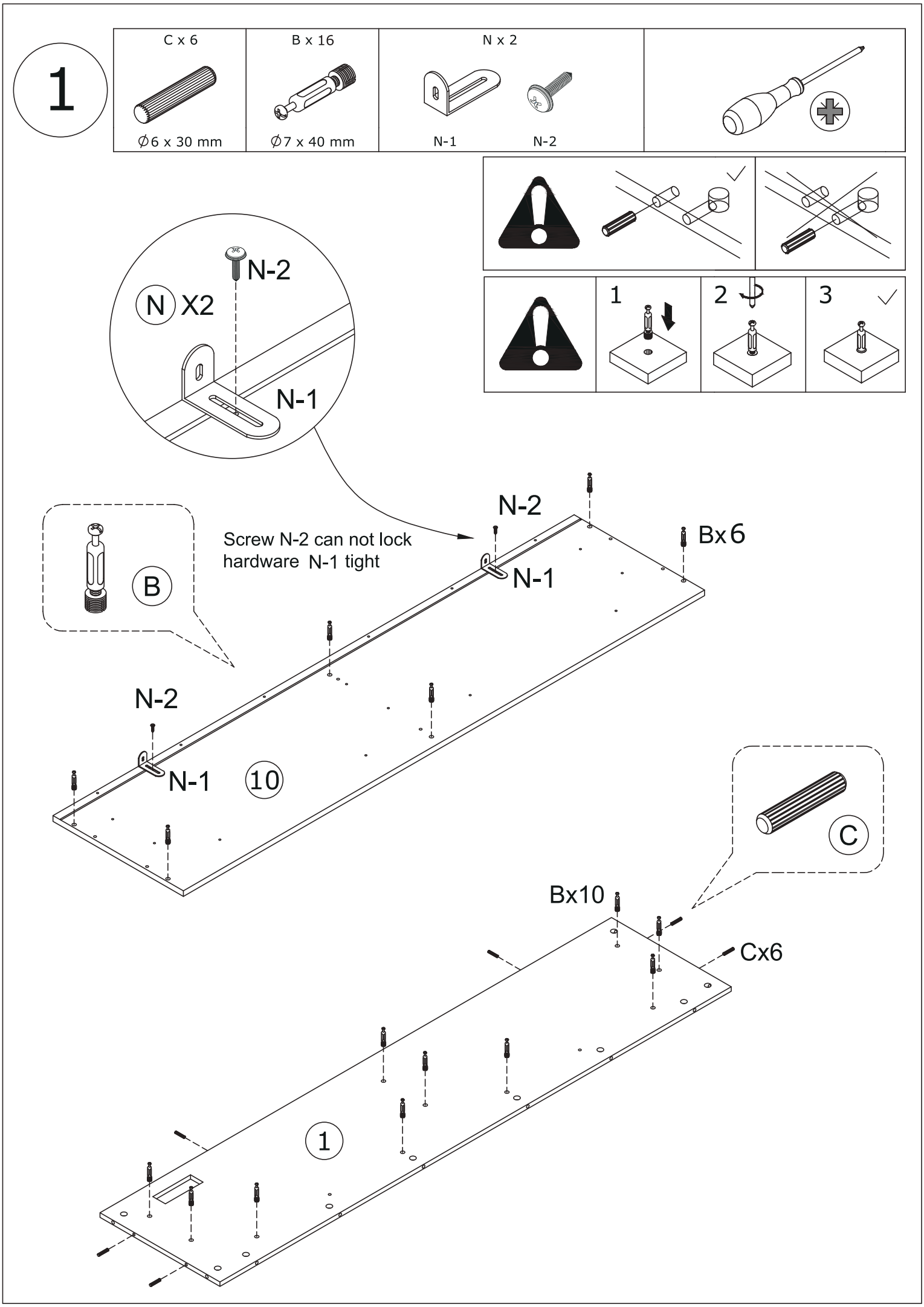
1
C x 6
∅6 x 30 mm
B x 16
∅7 x 40 mm
N x 2
N-1
N-2
1
2
3
N-2
N X2
N-1
N-2
Bx6
N-1
Screw N-2 can not lock
hardware N-1 tight
B
N-2
N-1
10
C
Bx10
Cx6
1

2

C x 6	K x 22	
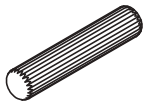	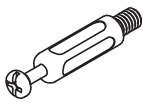	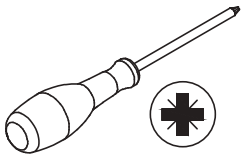
∅6 x 30 mm	∅7 x 40 mm	

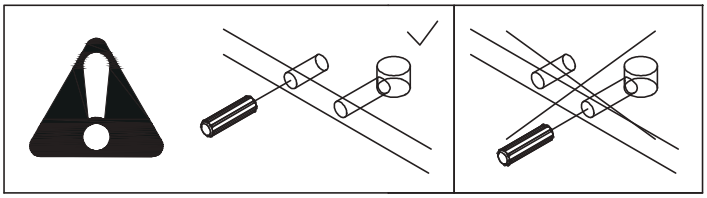

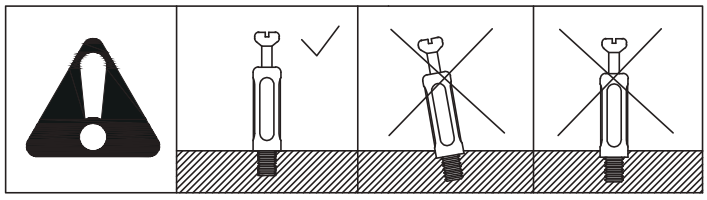

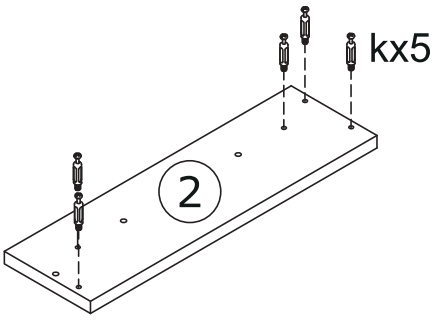

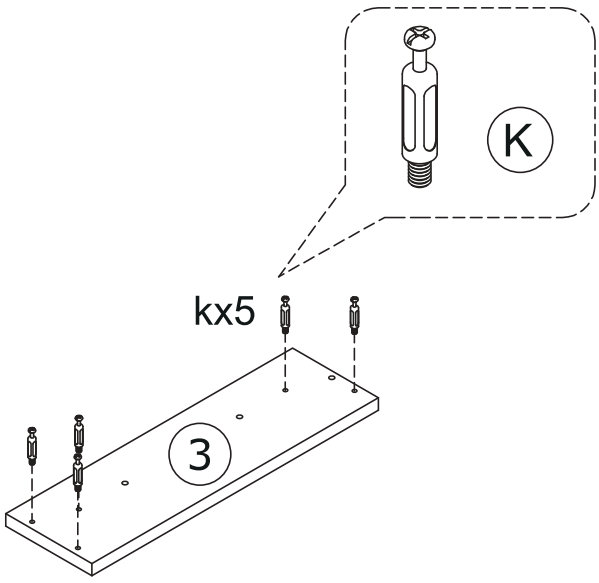

3

K x 2	C x 3	
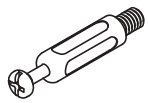	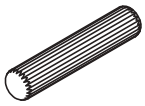	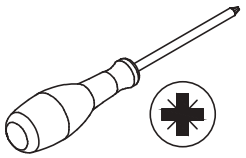
∅7 x 40 mm	∅6 x 30 mm	

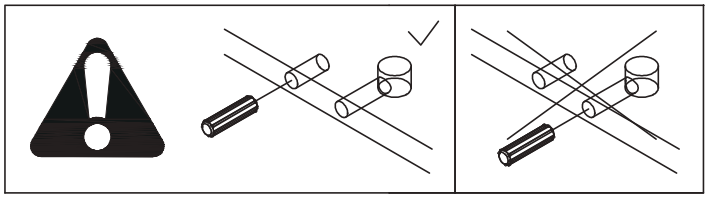

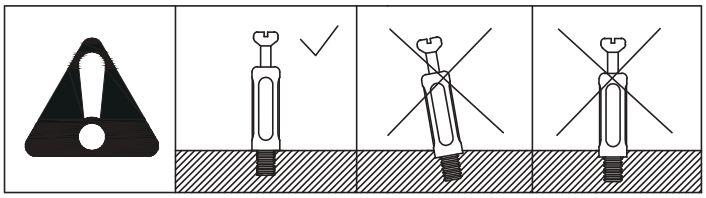

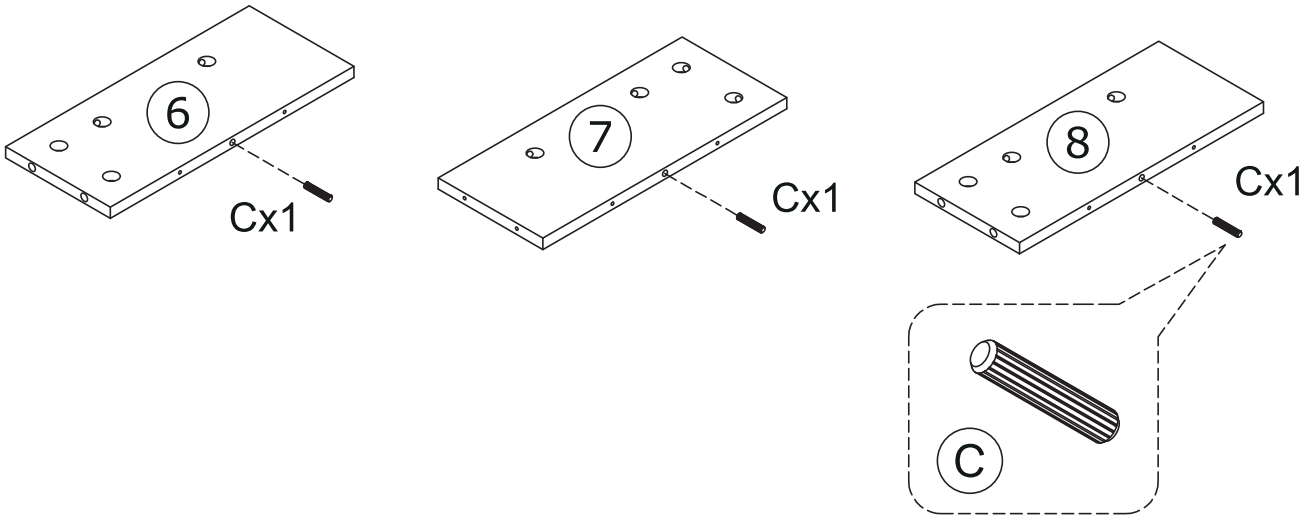

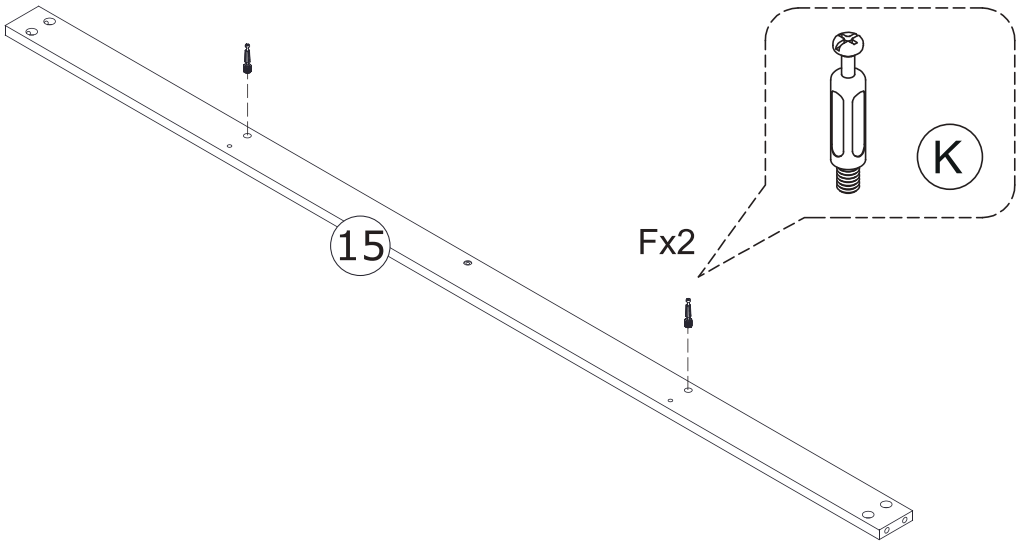

4

K x 7	C x 4	
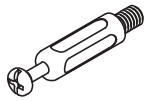	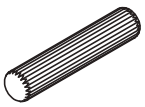	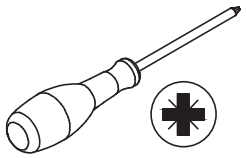
∅7 x 40 mm	∅6 x 30 mm	

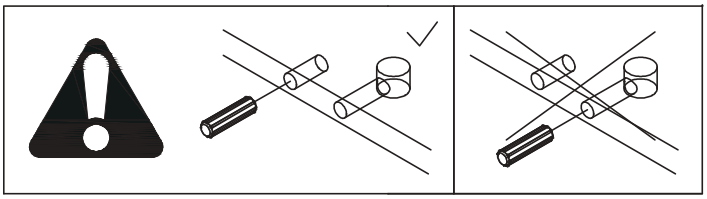

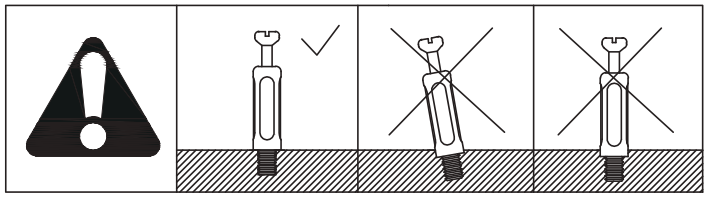

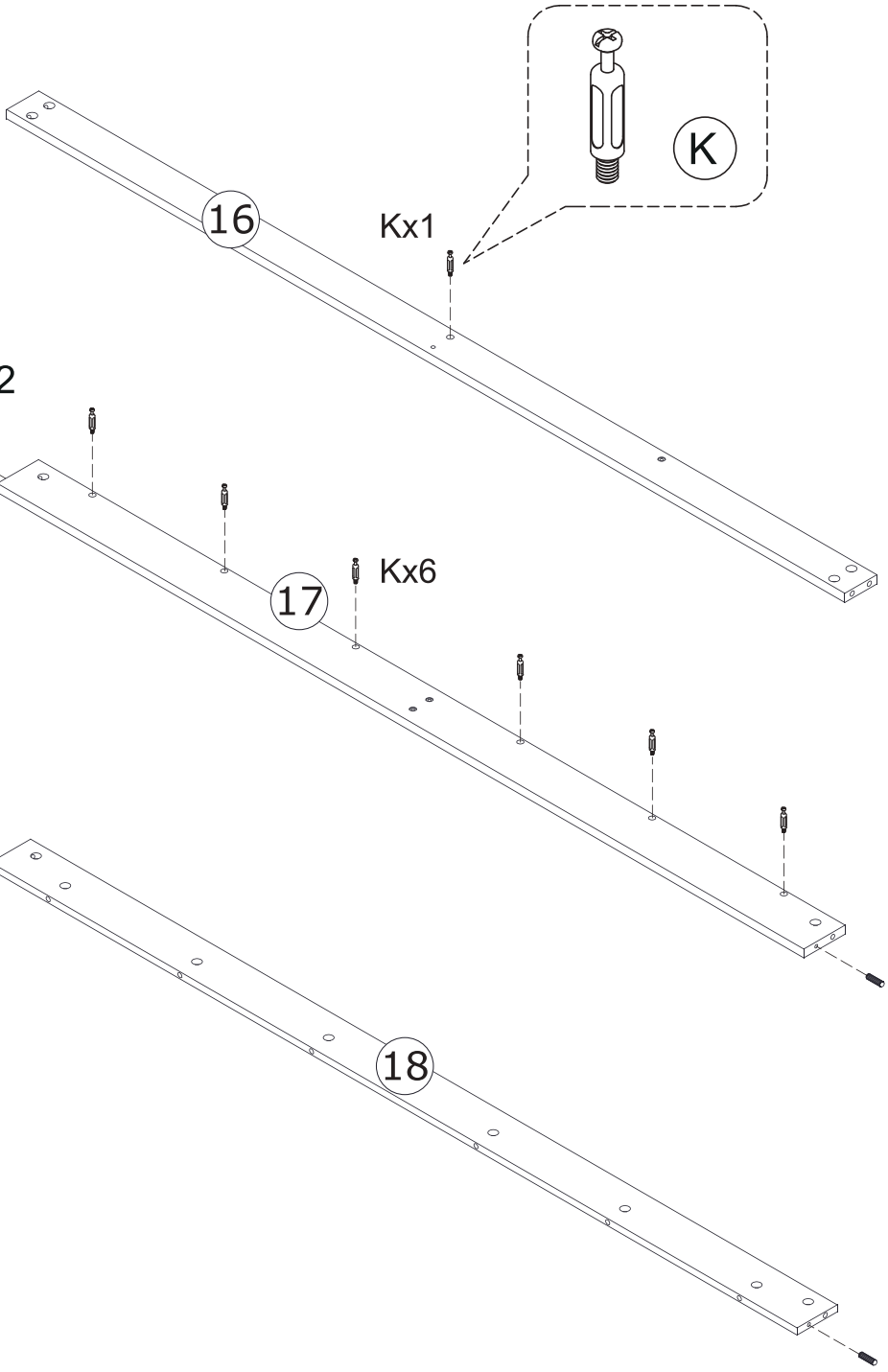

5

B x 3	C x 2	
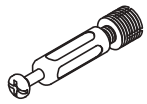	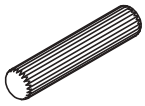	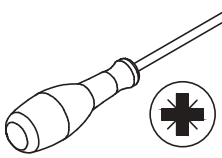
∅7 x 40 mm	∅6 x 30 mm	

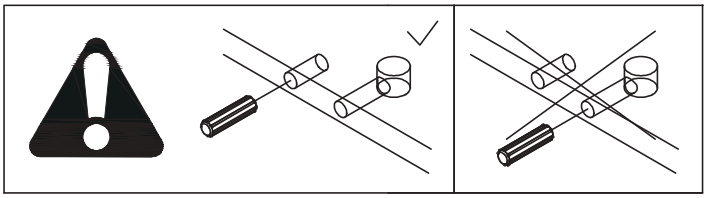

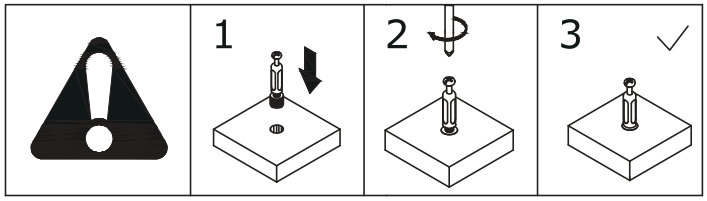

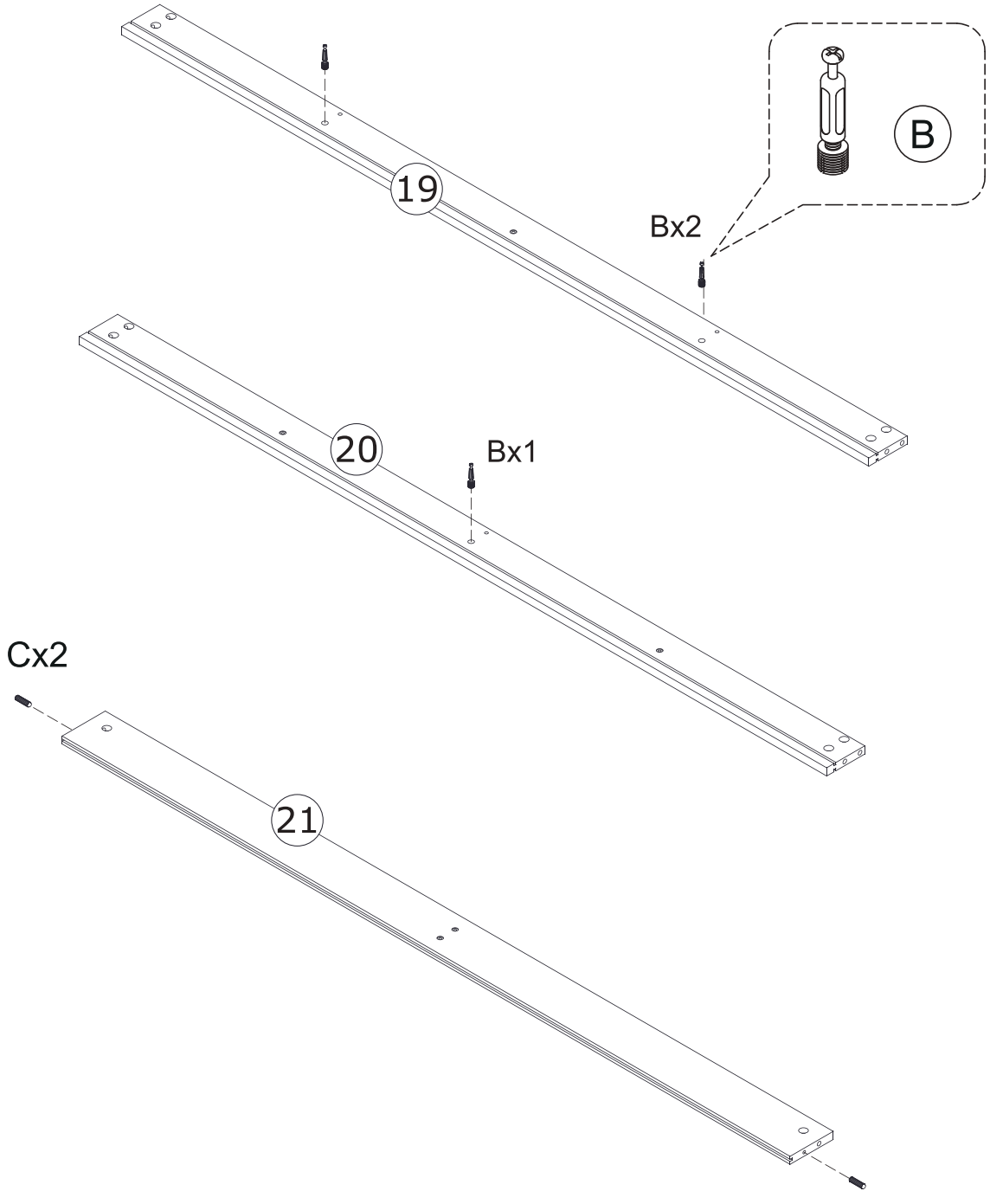

6

D x 24	CL x 3	CR x 3	
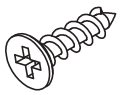	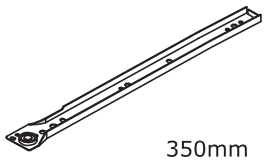	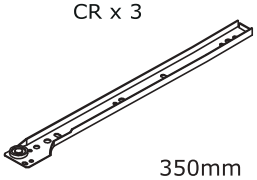	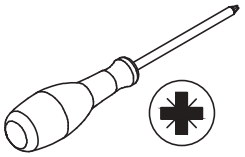
∅3.5 x 14 mm	350mm	350mm	

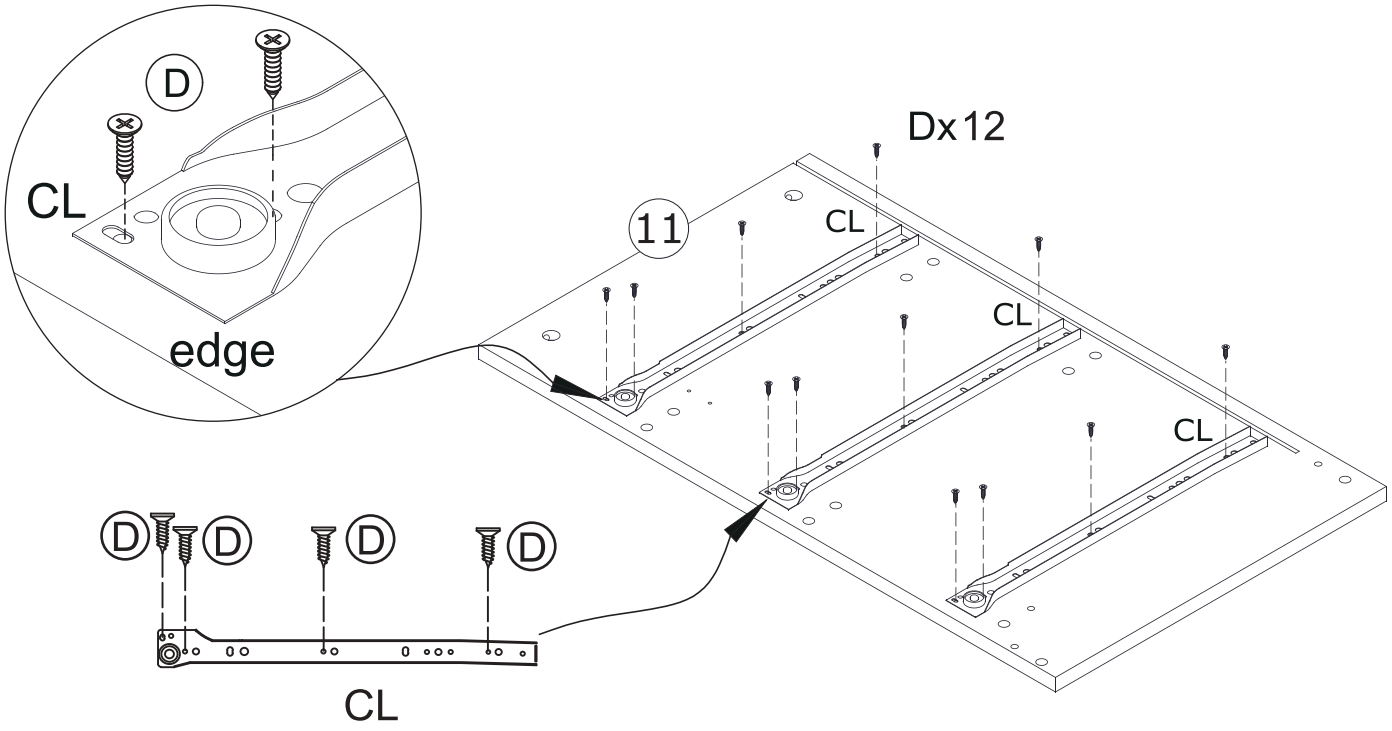

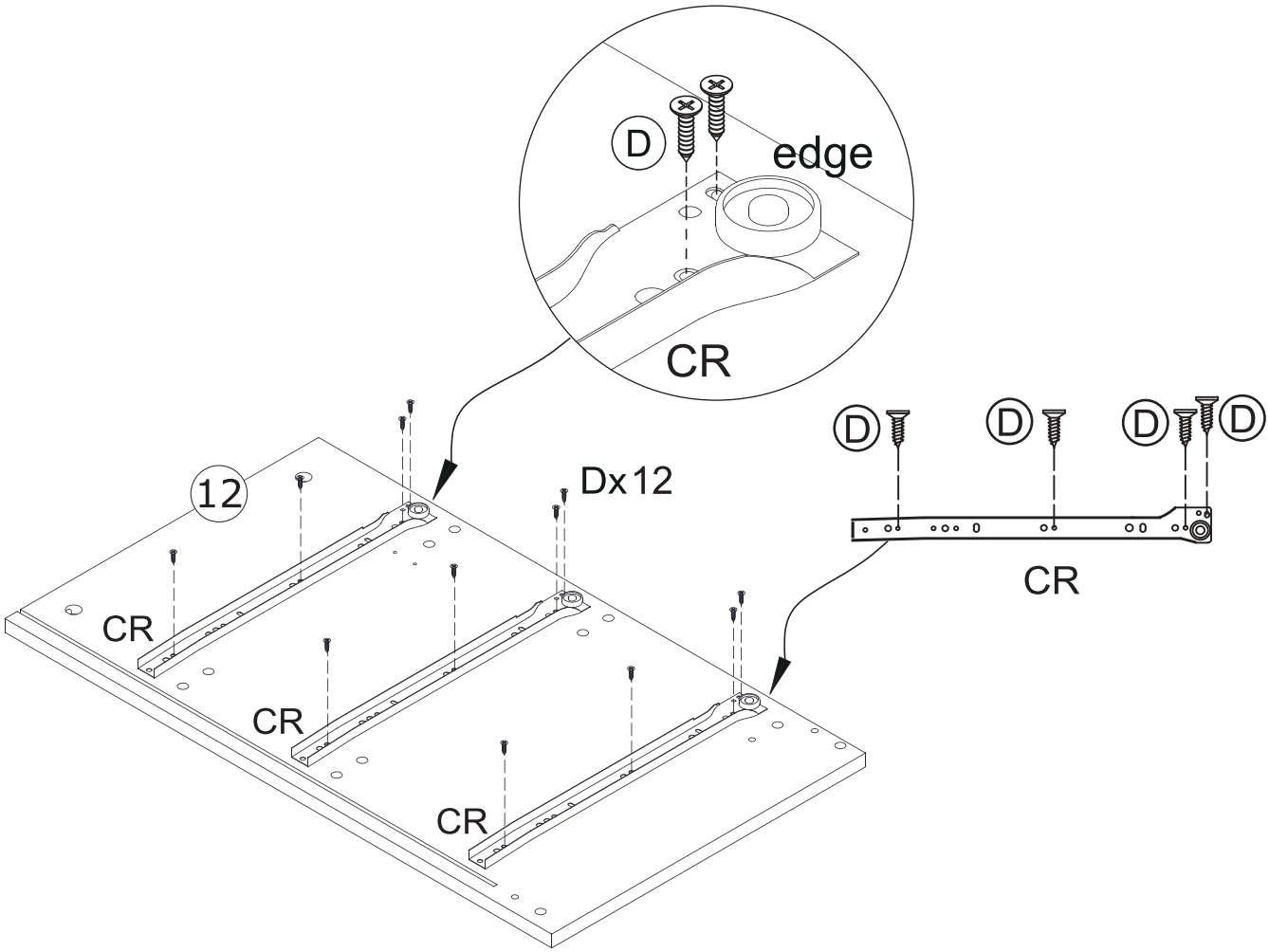

7

B x 22	C x 4	
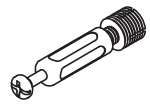	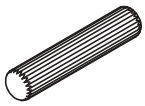	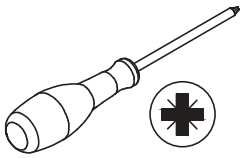
∅7 x 40 mm	∅6 x 30 mm	

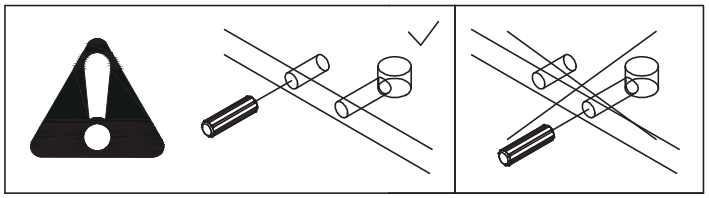

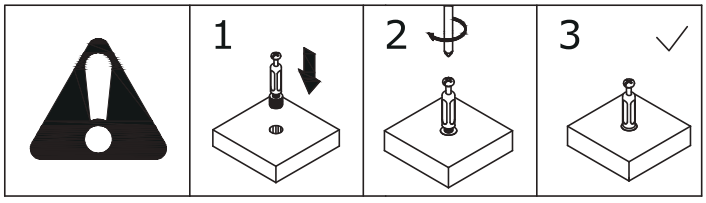

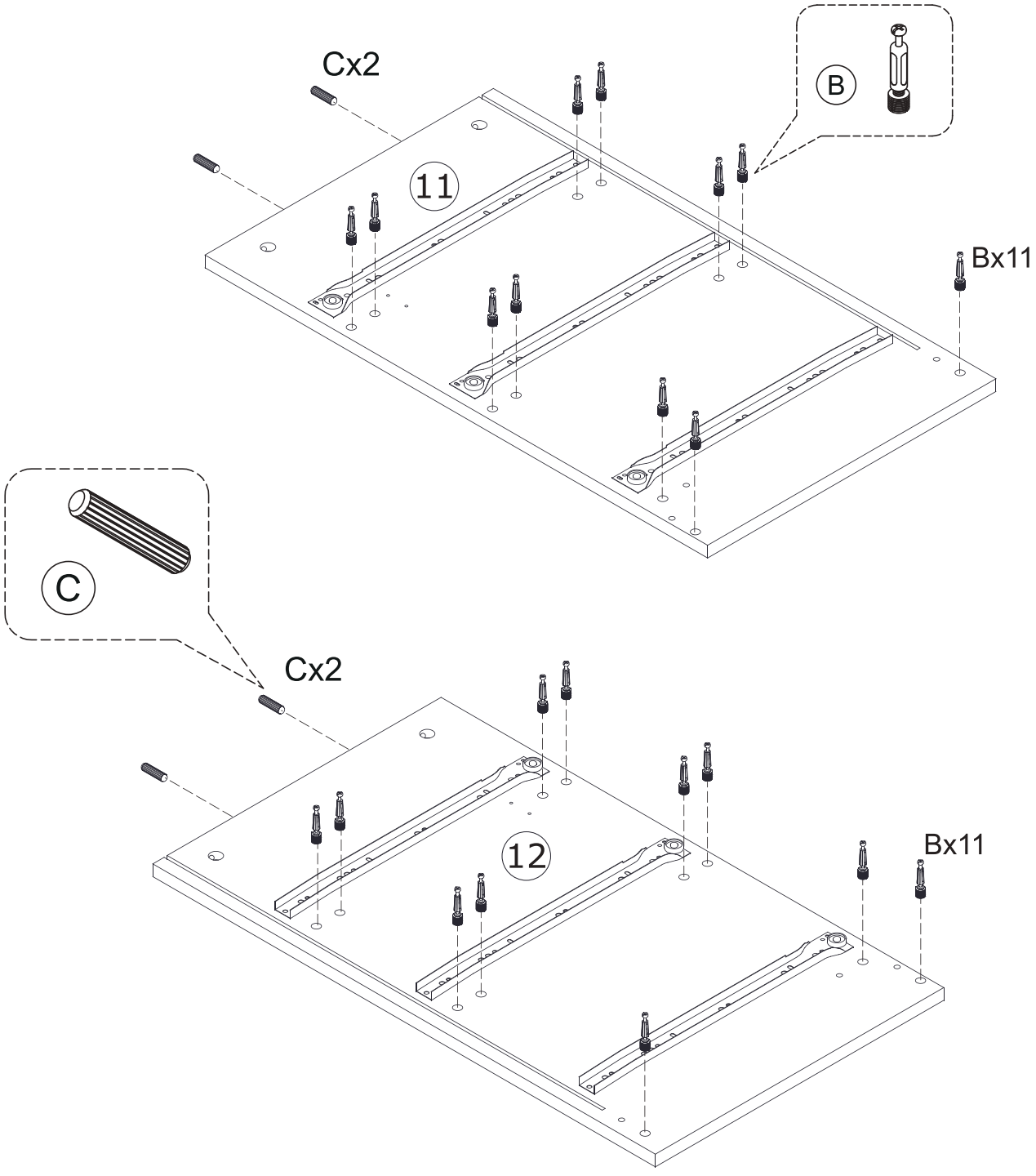

8

C x 12	D x24	CL x 3	CR x 3	
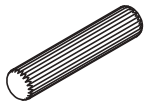	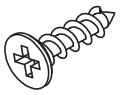	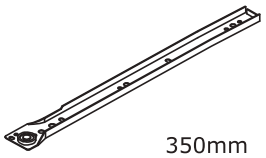	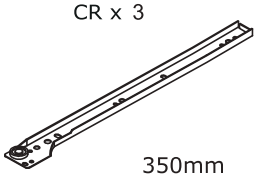	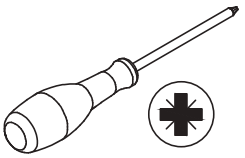
∅6 x 30 mm	∅3.5 x 14 mm	350mm	350mm	

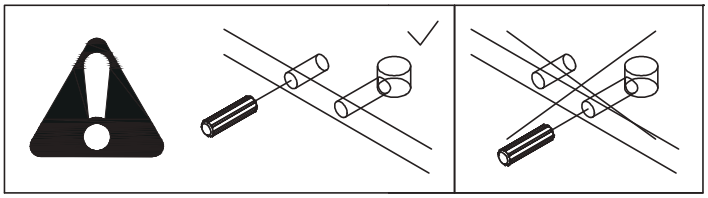

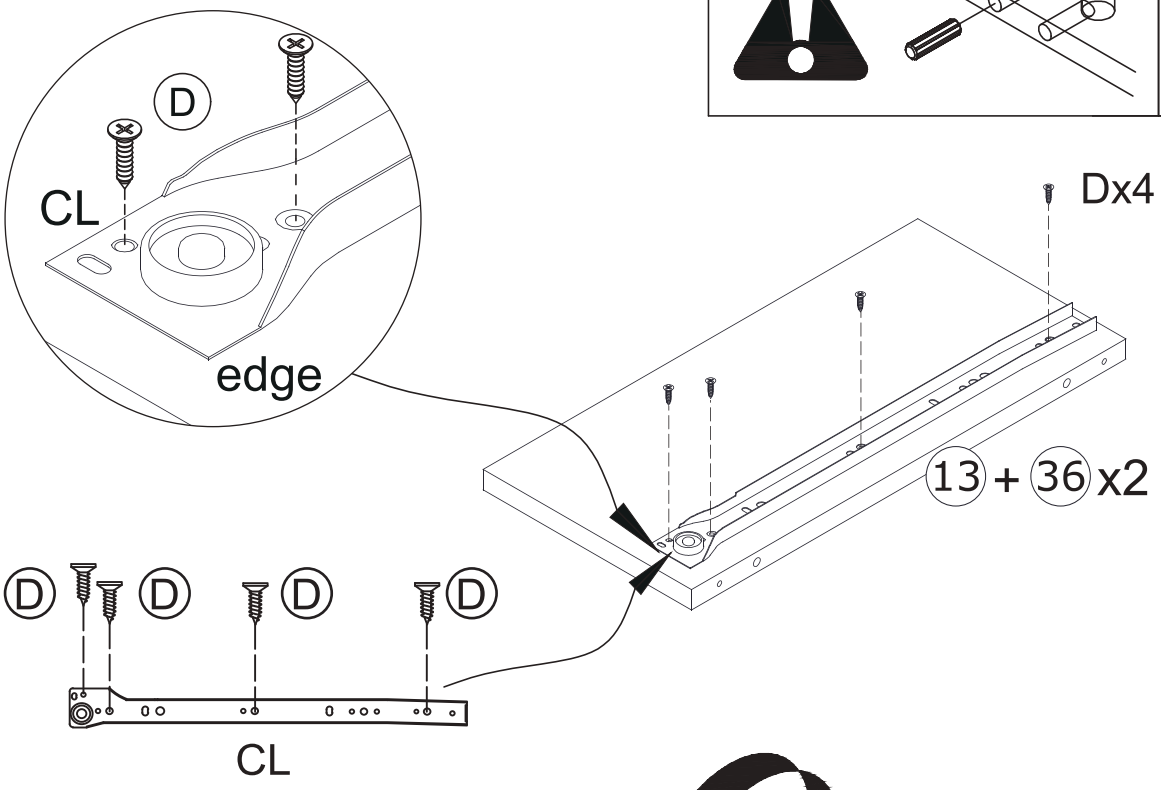

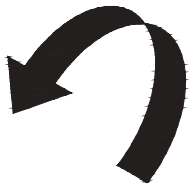

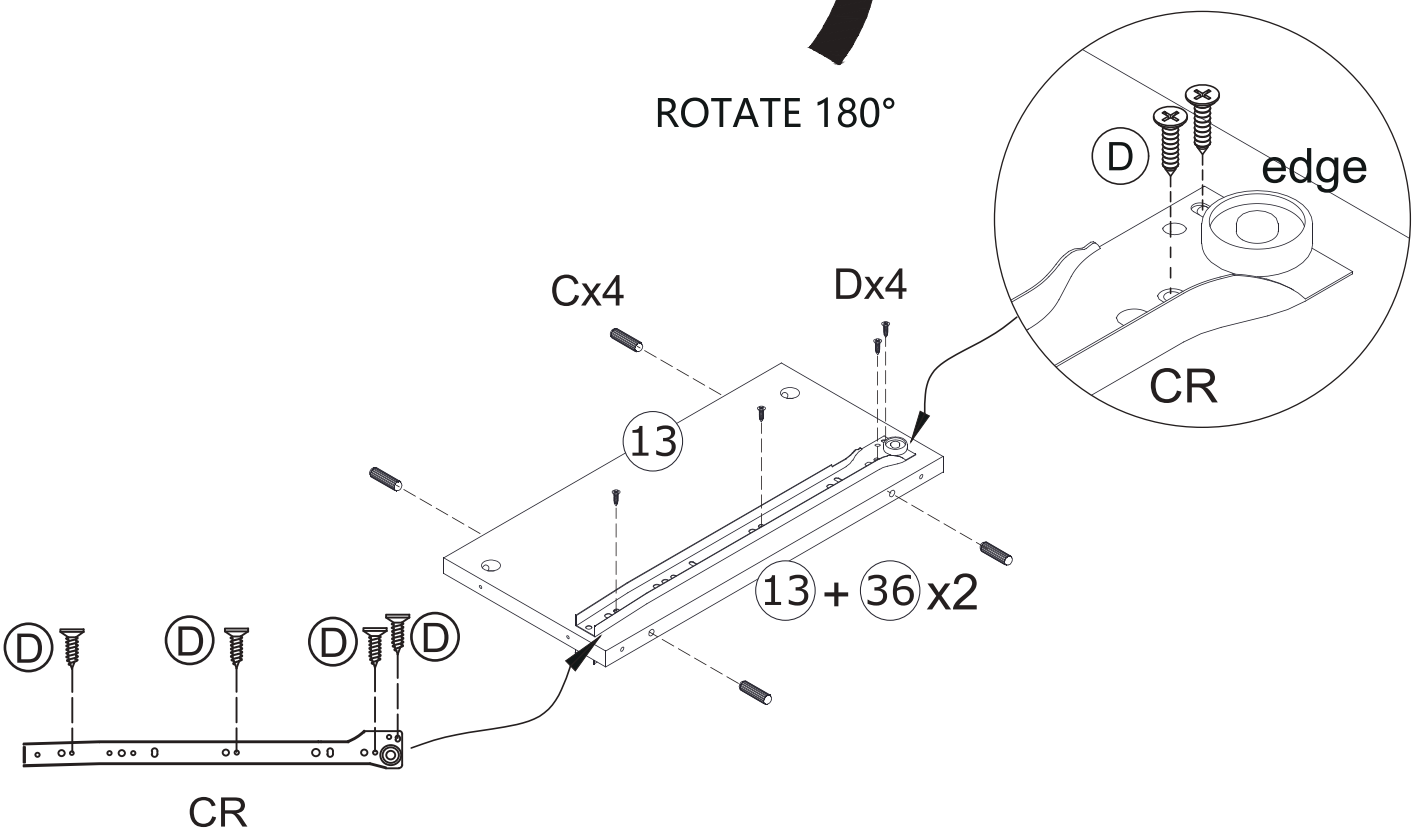

9

C x 2	D x 8	CL X 1	CR X 1	
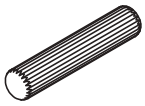	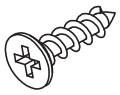	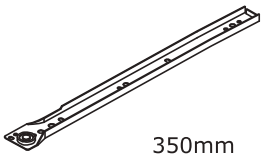	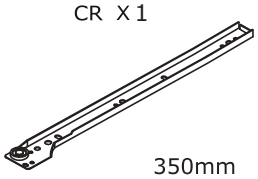	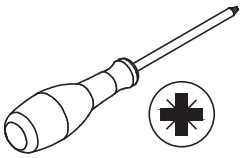
Ø6 x 30 mm	Ø3.5 x 14 mm	350mm	350mm	

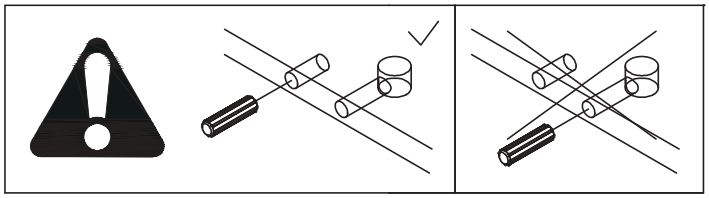

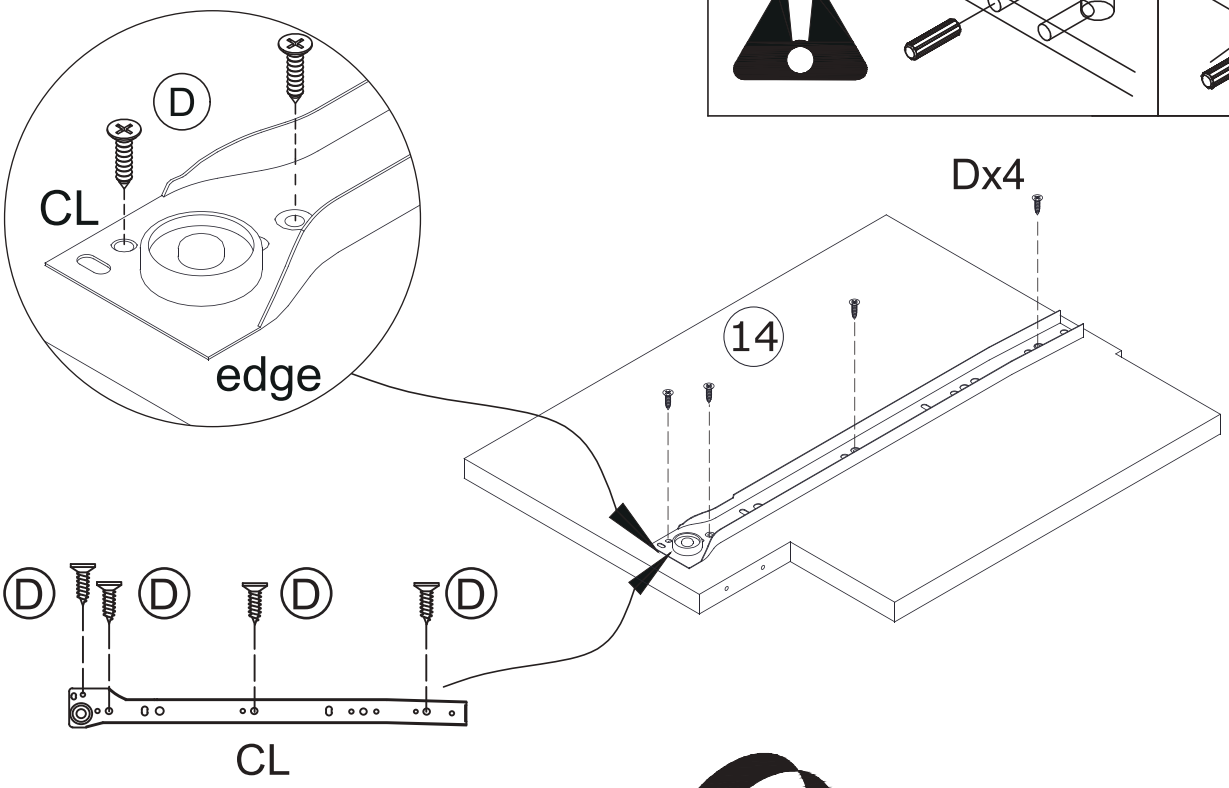

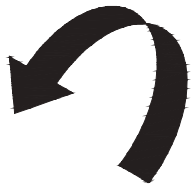

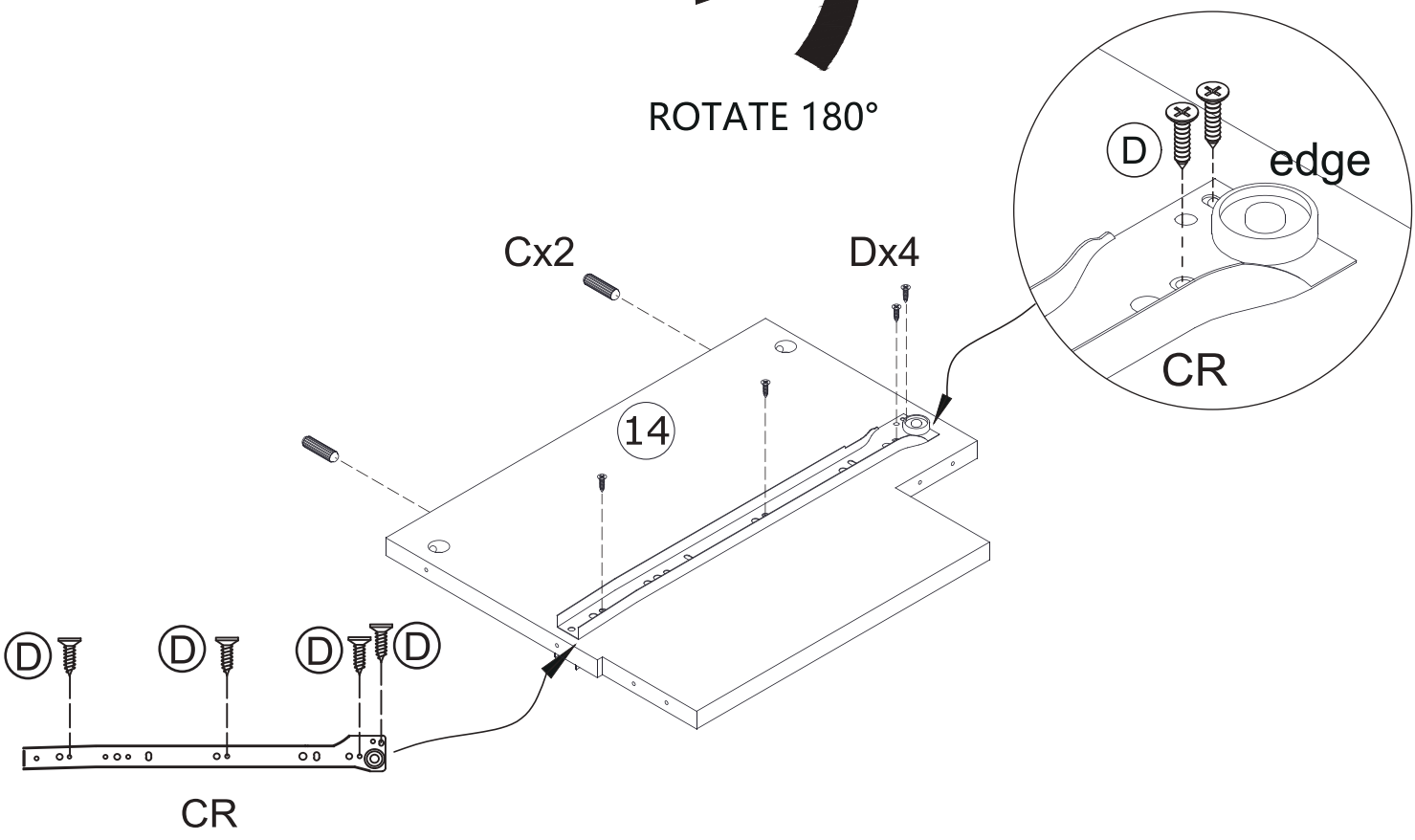

10

A x 6



Ø15 x 9.5mm

L x 1



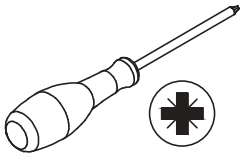

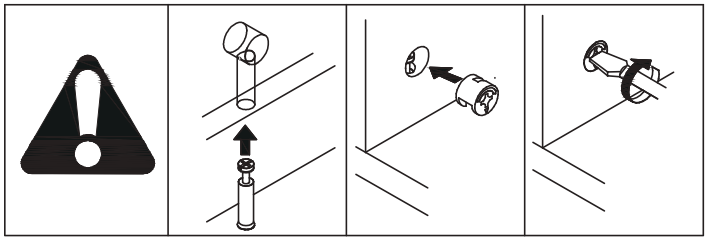

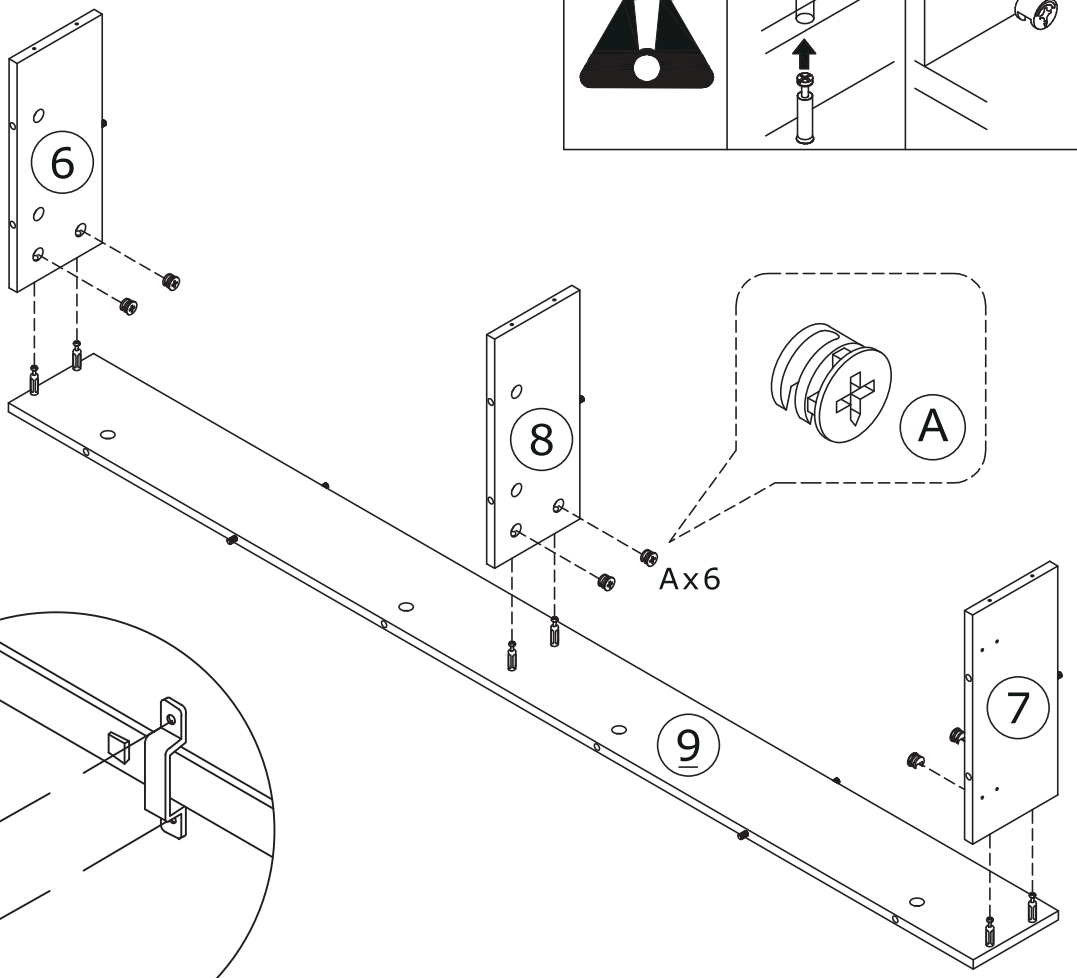

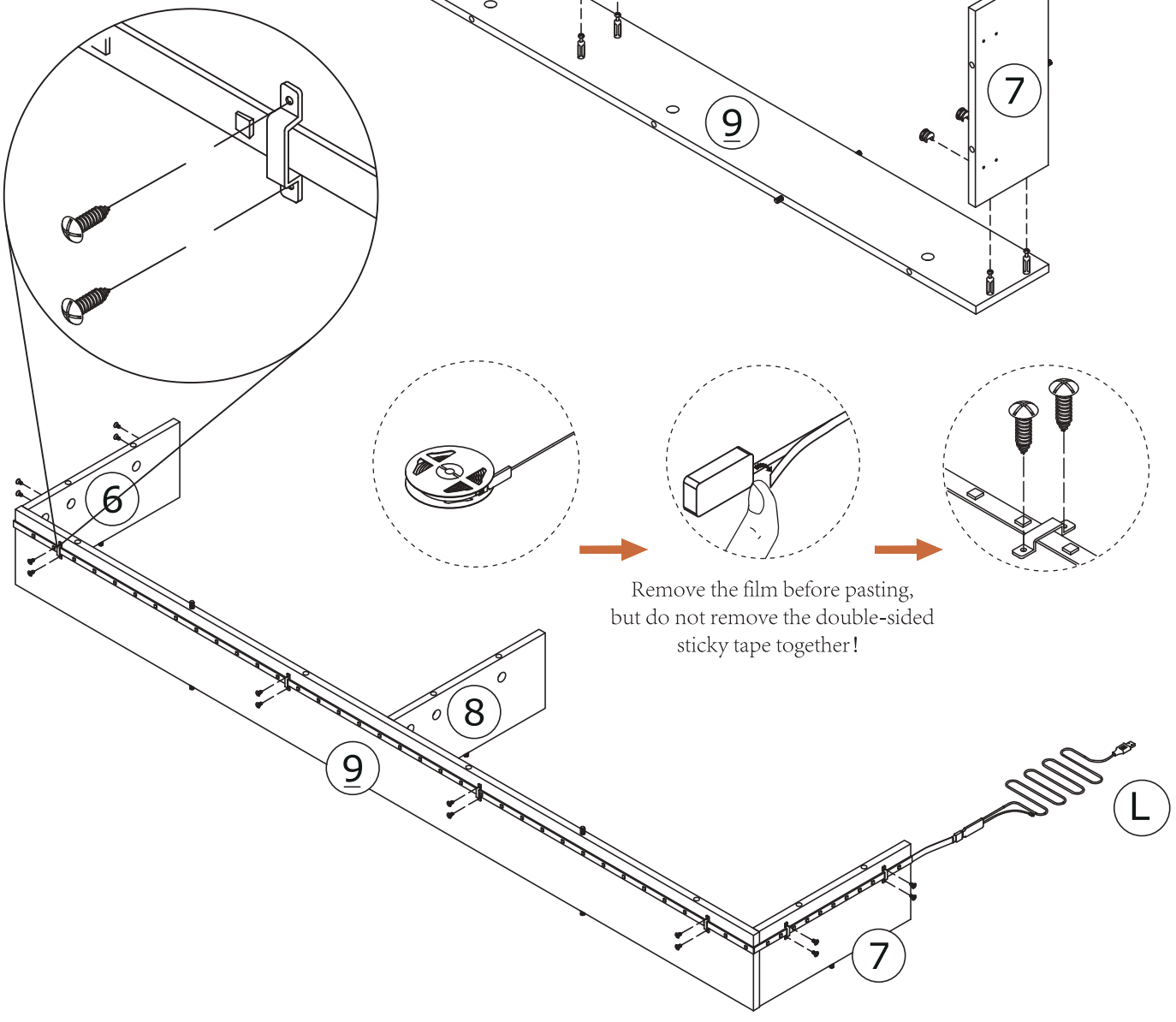

Remove the film before pasting,
but do not remove the double-sided
sticky tape together!

11

A x 6



∅15 x 9.5 mm

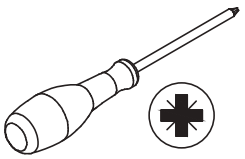

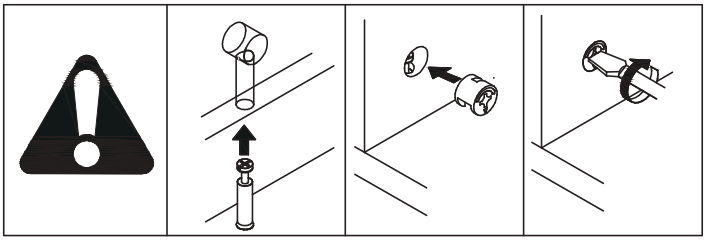

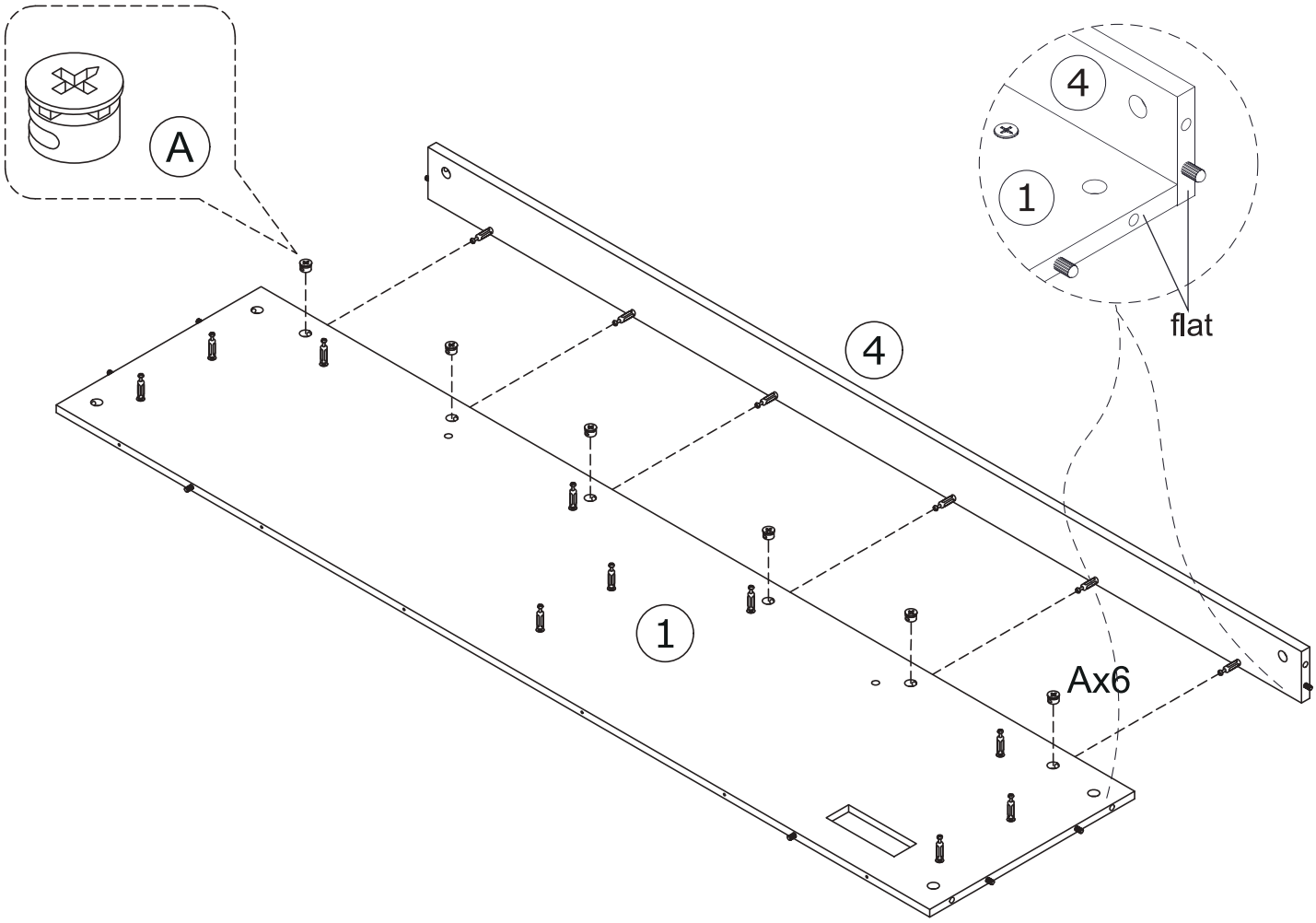

12

A x 10



∅15 x 9.5 mm

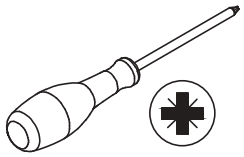

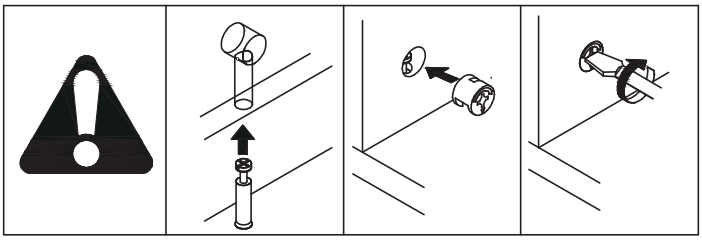

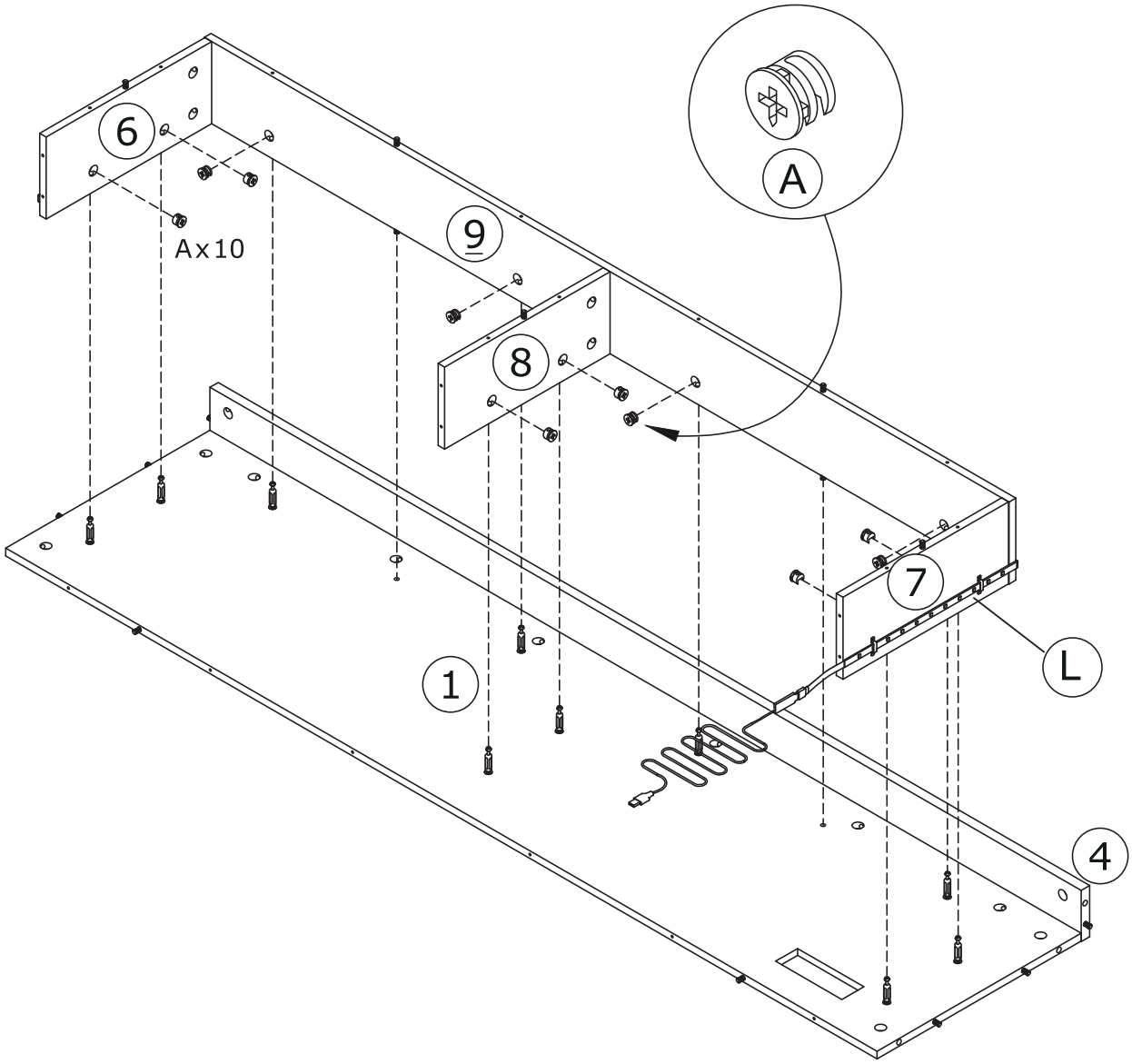

13

G x 12

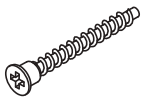

∅5 x 40 mm

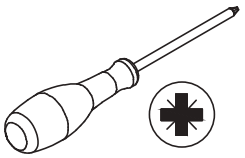

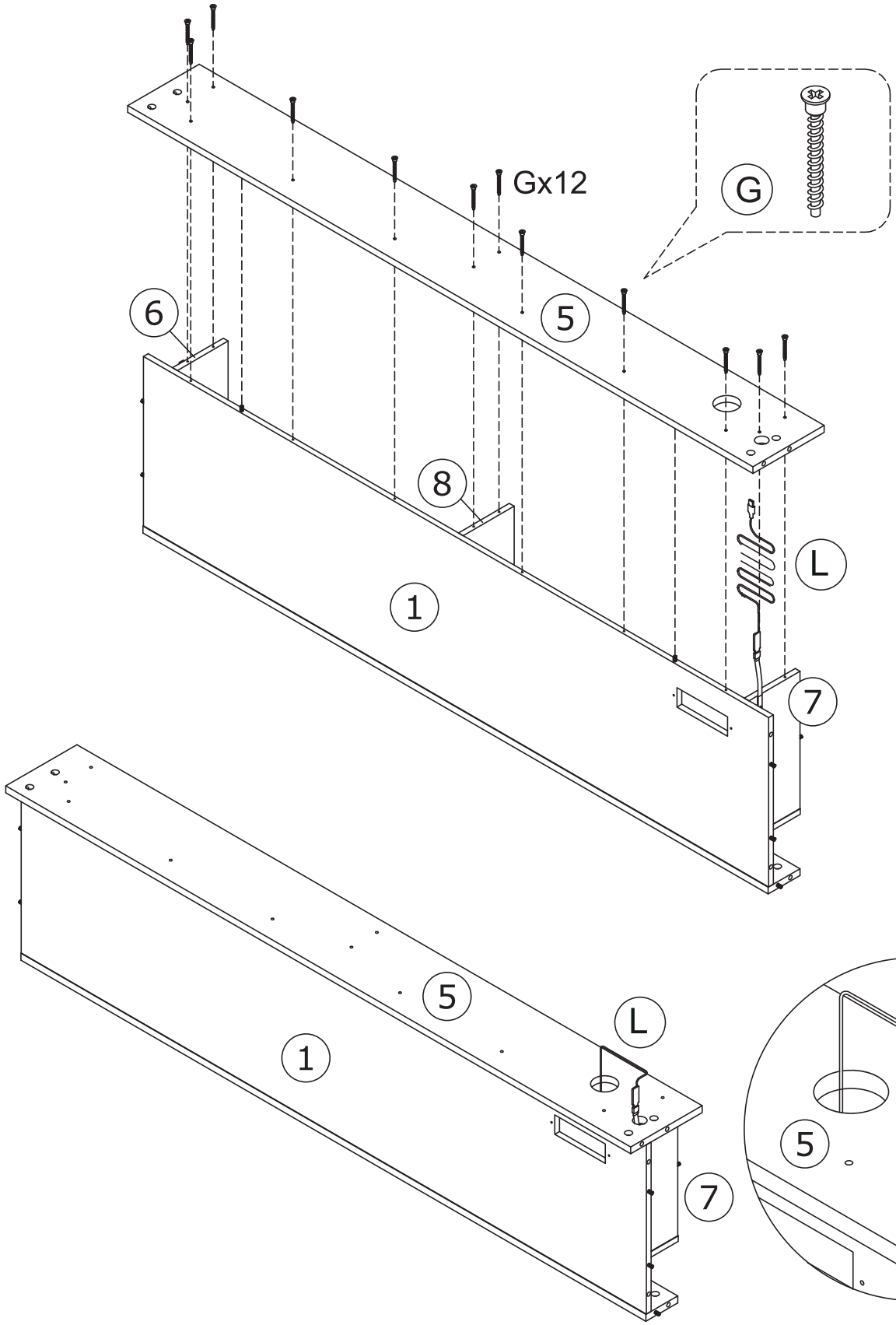

14

A x 10	O x 1	S x 2	
	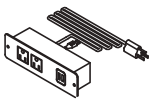		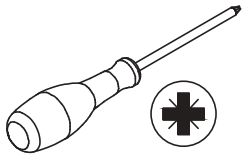
∅15 x 9.5 mm		∅3.5 x 12 mm	

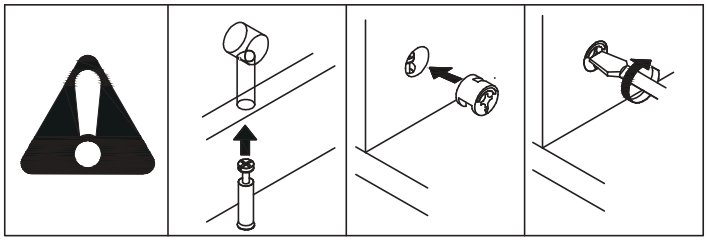

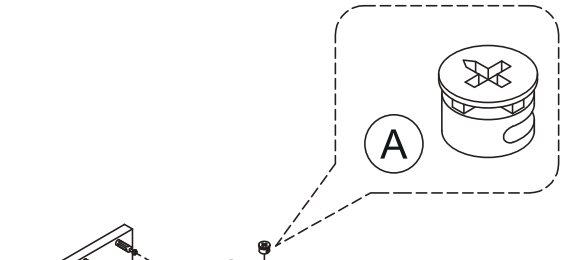

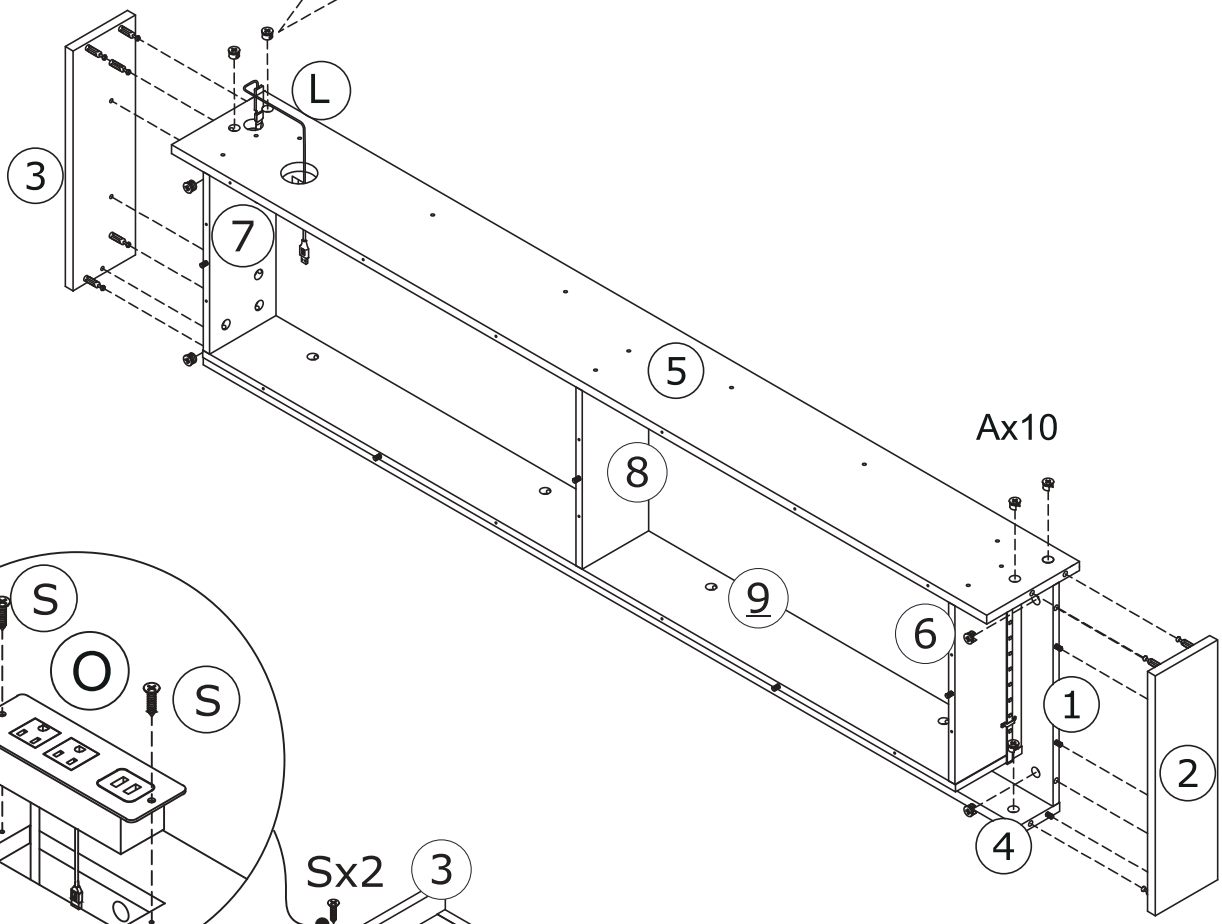

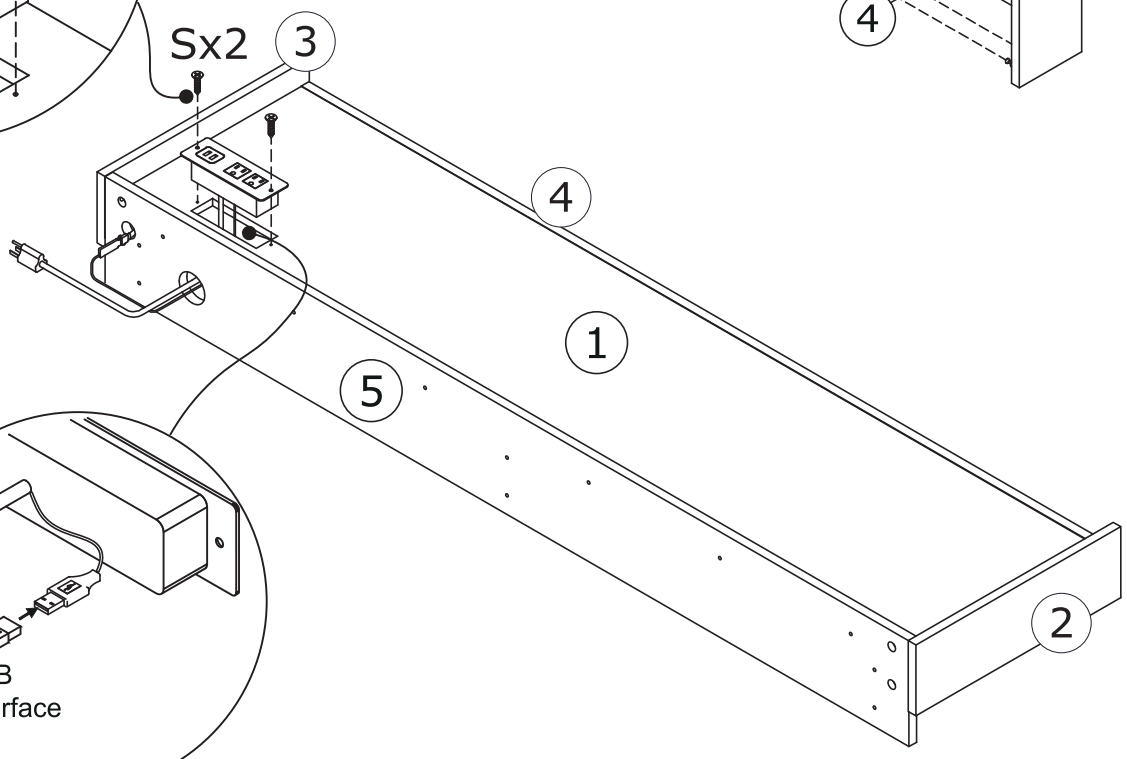

Insert the LED strip into the bottom interface of the power board

15

G x 16

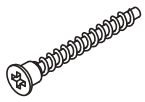

∅5 x 40 mm

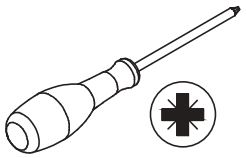

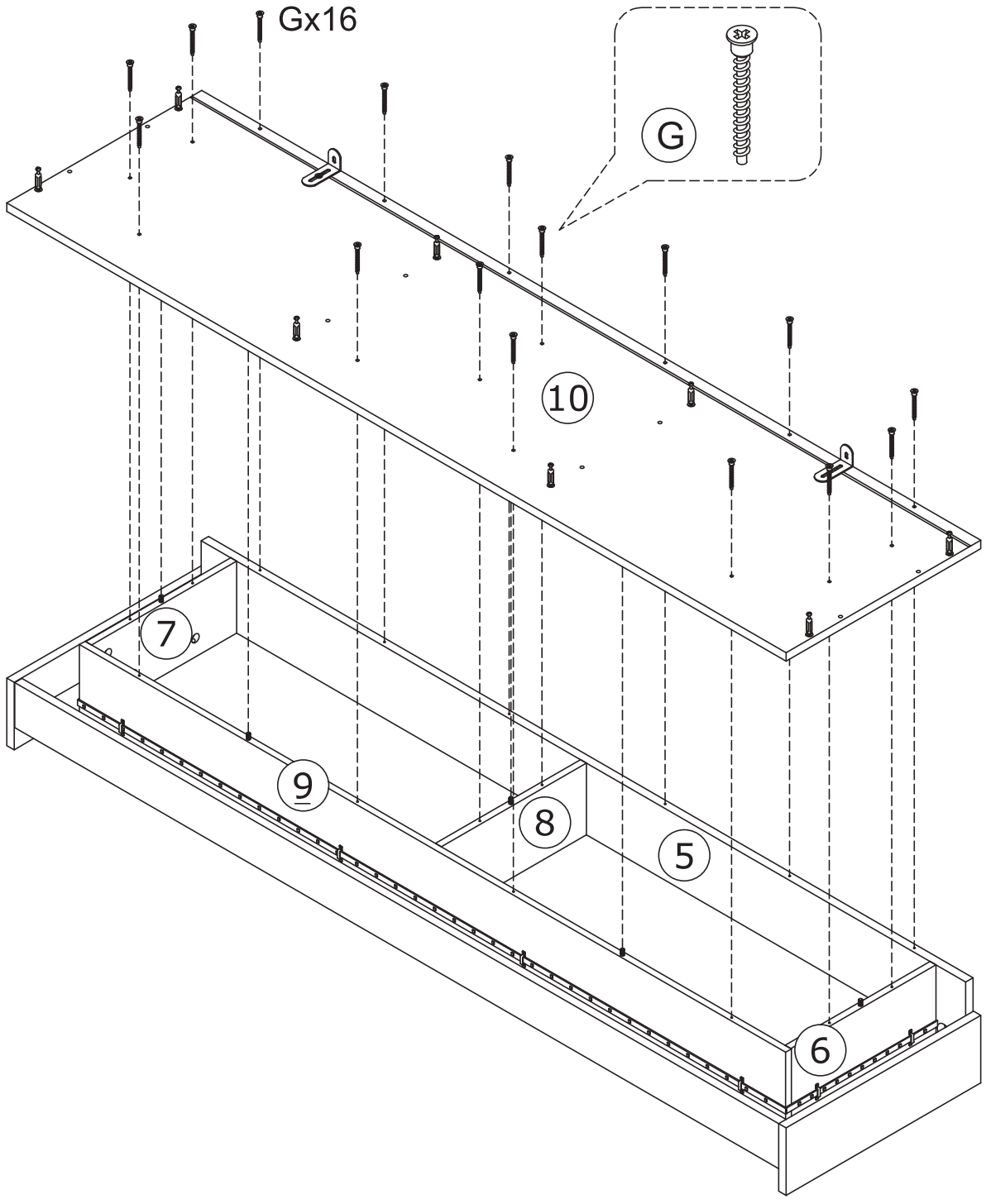

16

A x 4	G x 2	R x 2	
	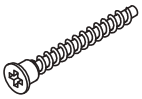	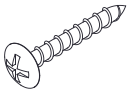	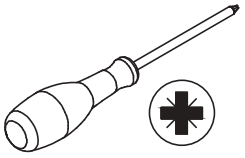
∅15 x 9.5 mm	∅5 x 40 mm	∅ 4 x 30 mm	

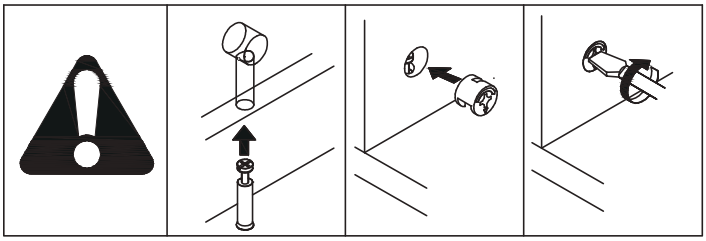

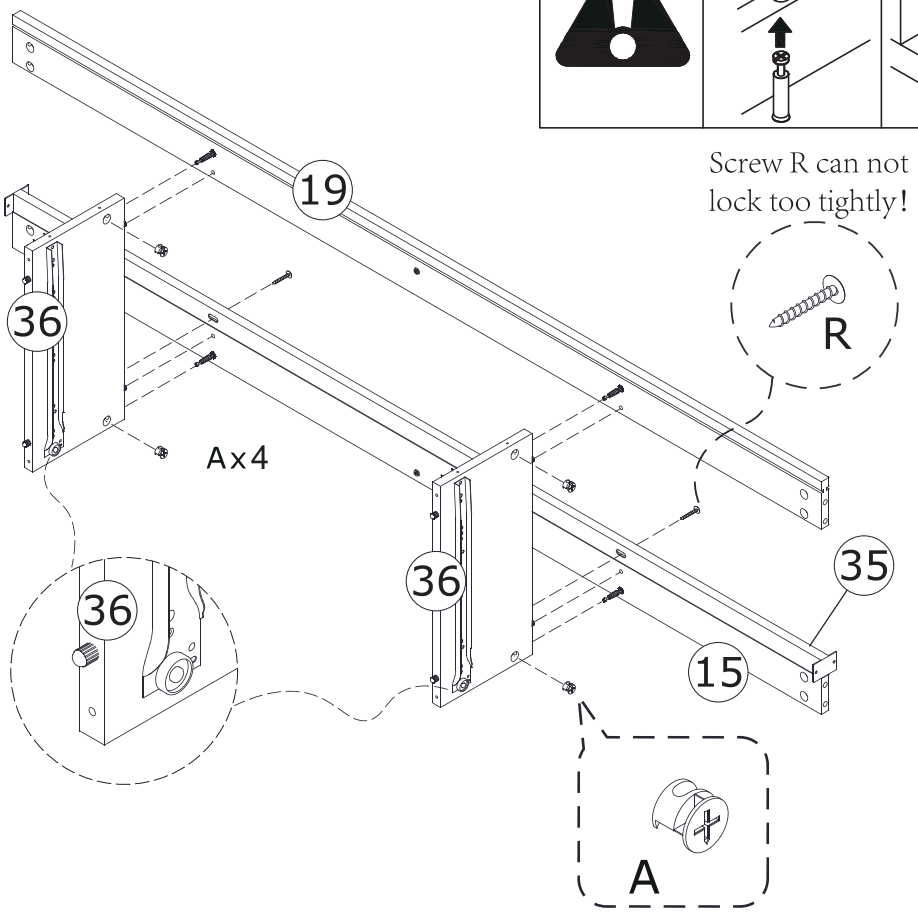

Screw R can not lock too tightly!

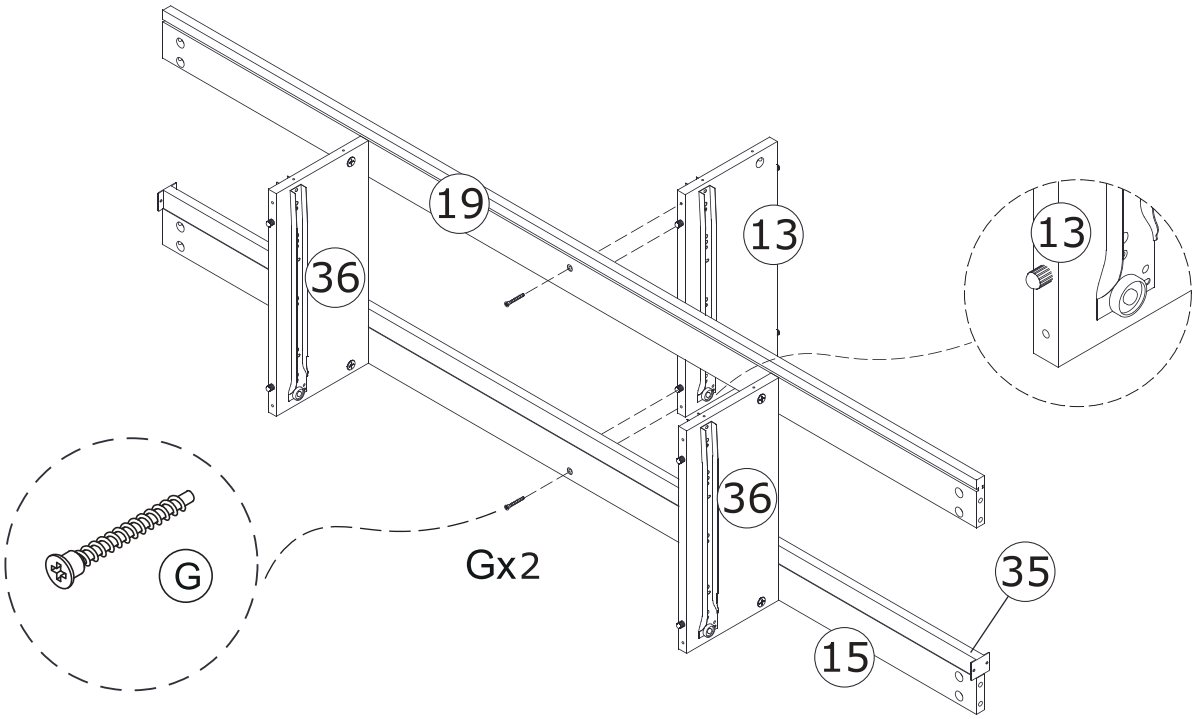

17

A x 6	G x 4	
	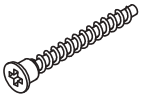	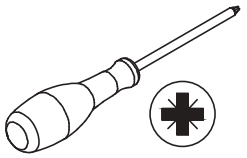
Ø15 x 9.5 mm	Ø5 x 40 mm	

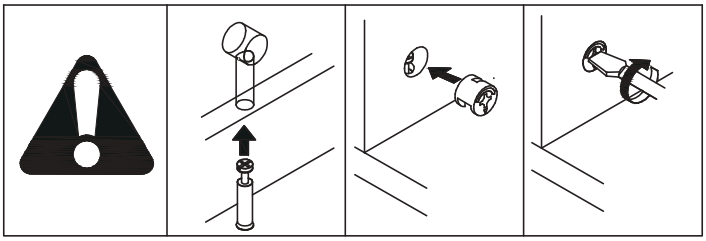

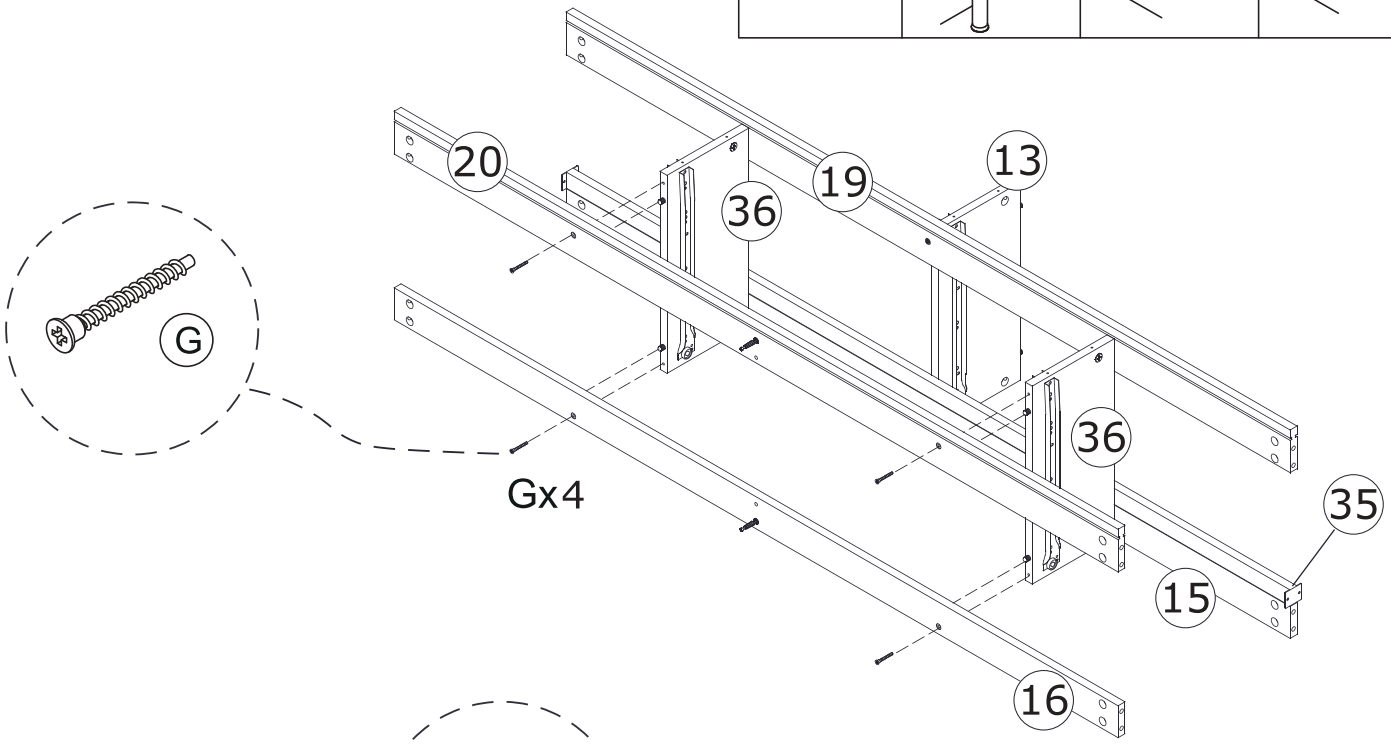

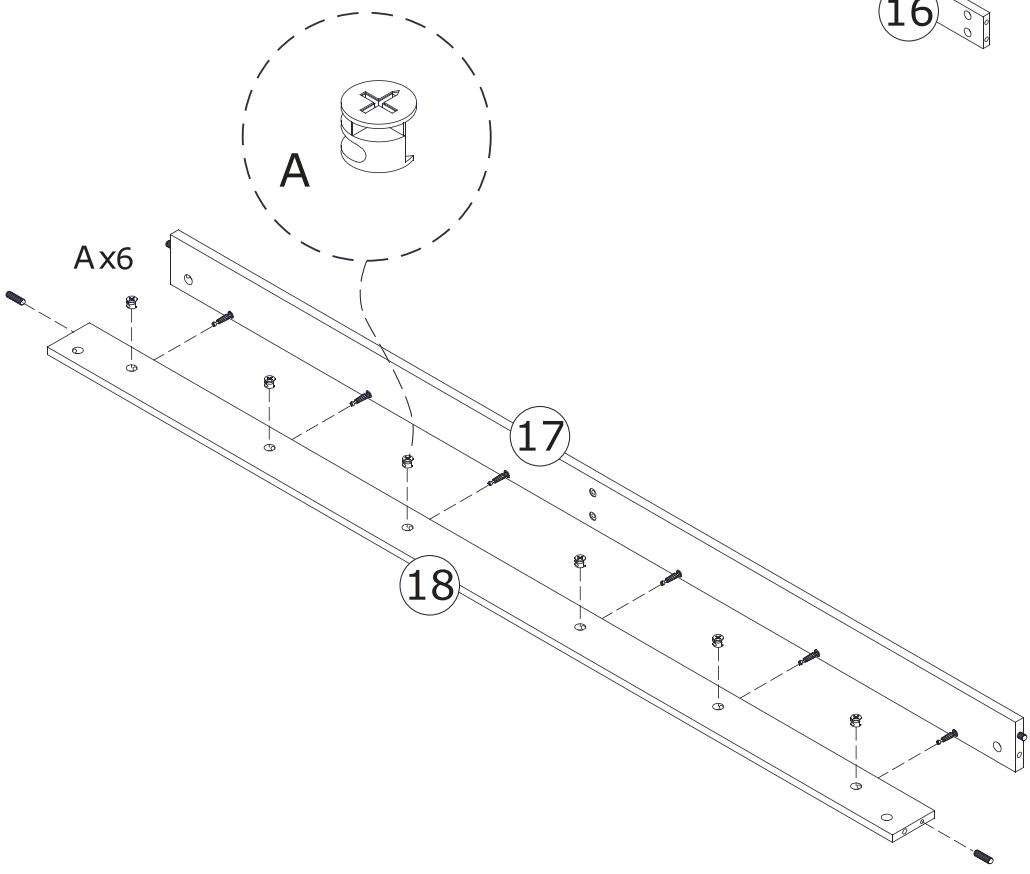

18

A x2	G x 2	
	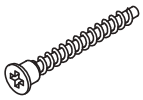	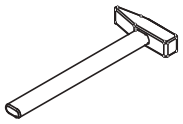
∅15 x 9.5 mm	∅5 x 40 mm	

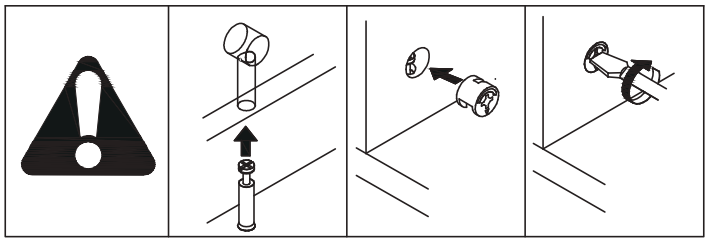

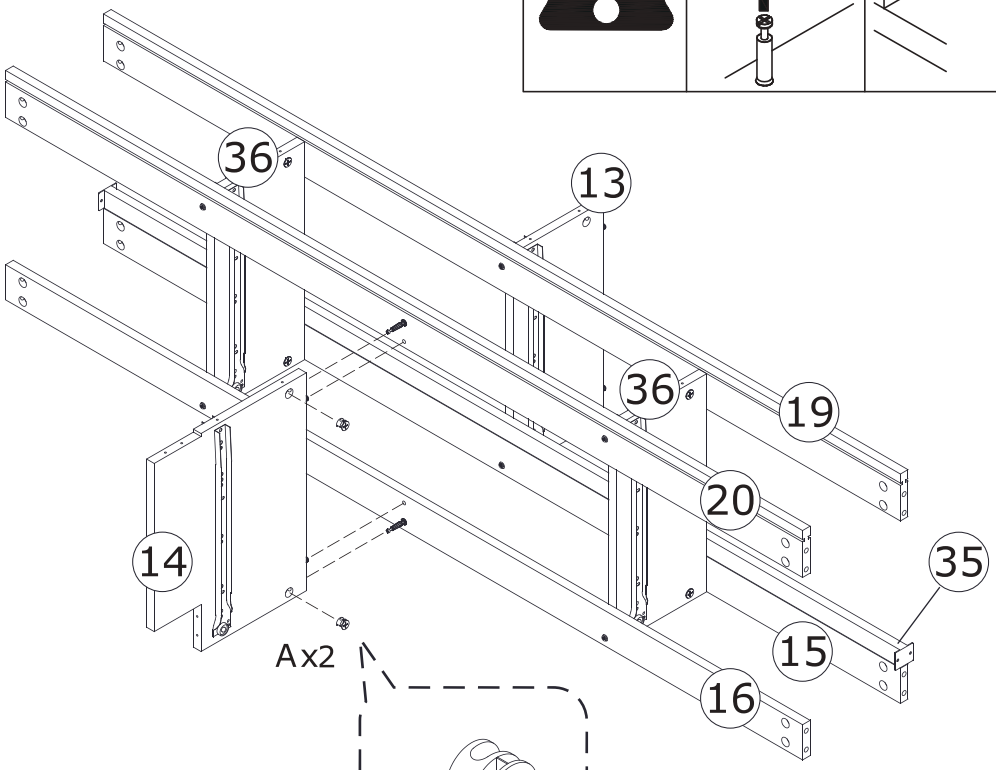

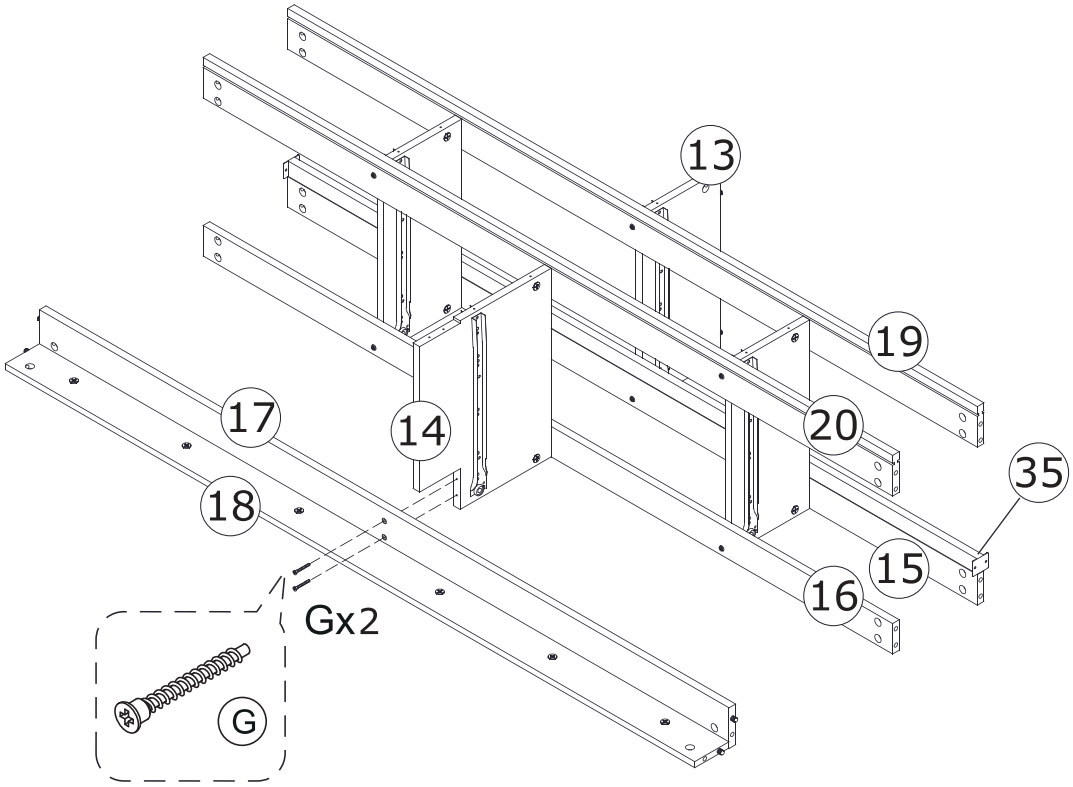

19

G x 2

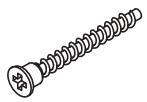

∅5 x 40 mm

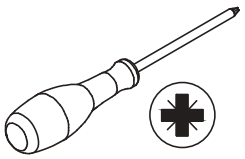

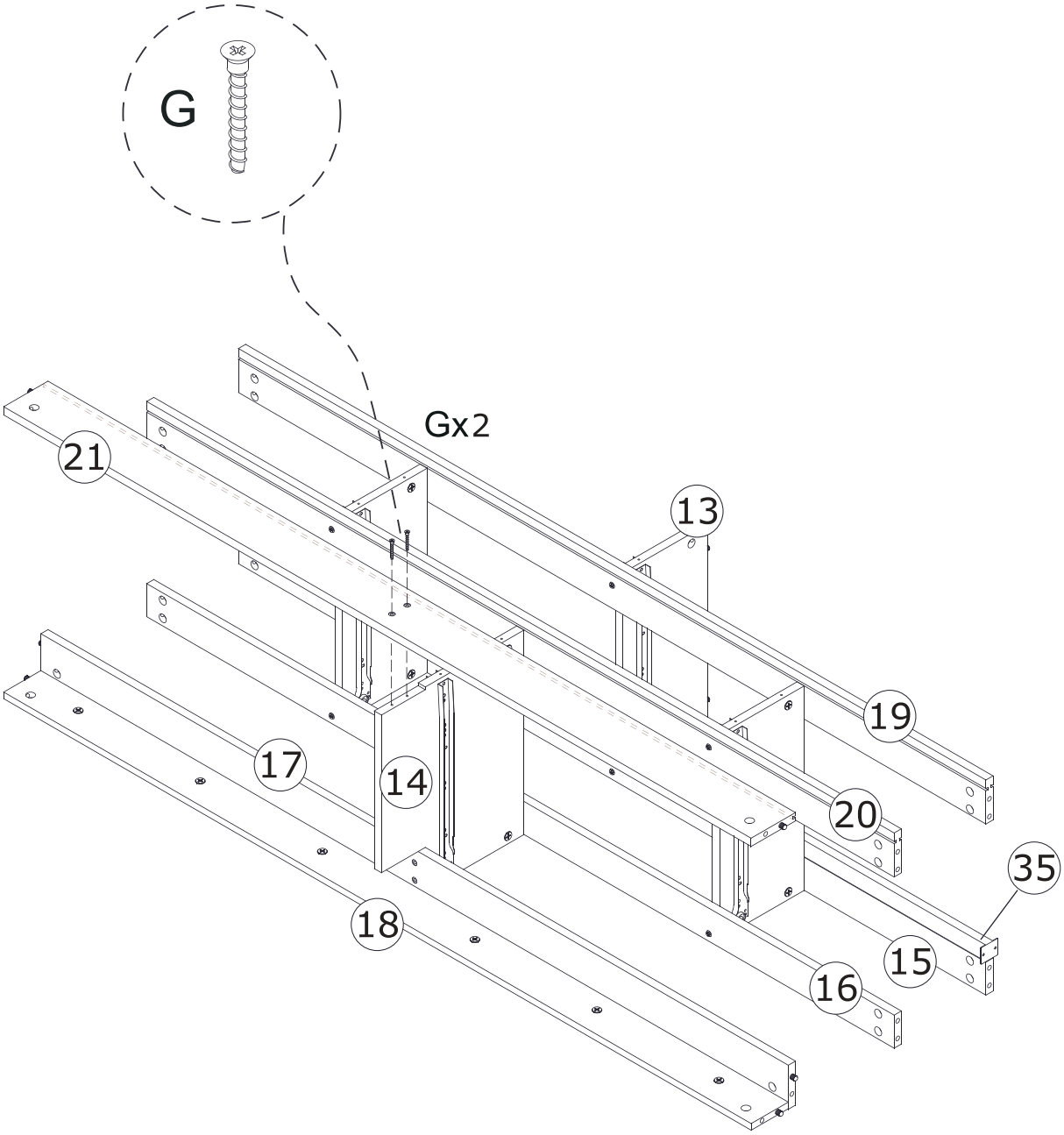

20

A x11	D x 2	
	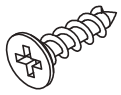	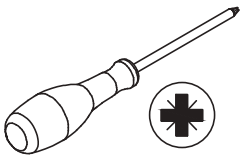
Ø15 x 9.5 mm	Ø3.5 x 14 mm	

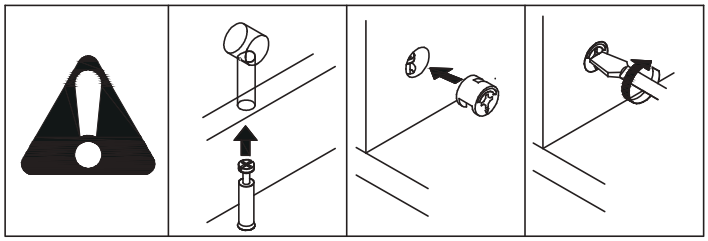

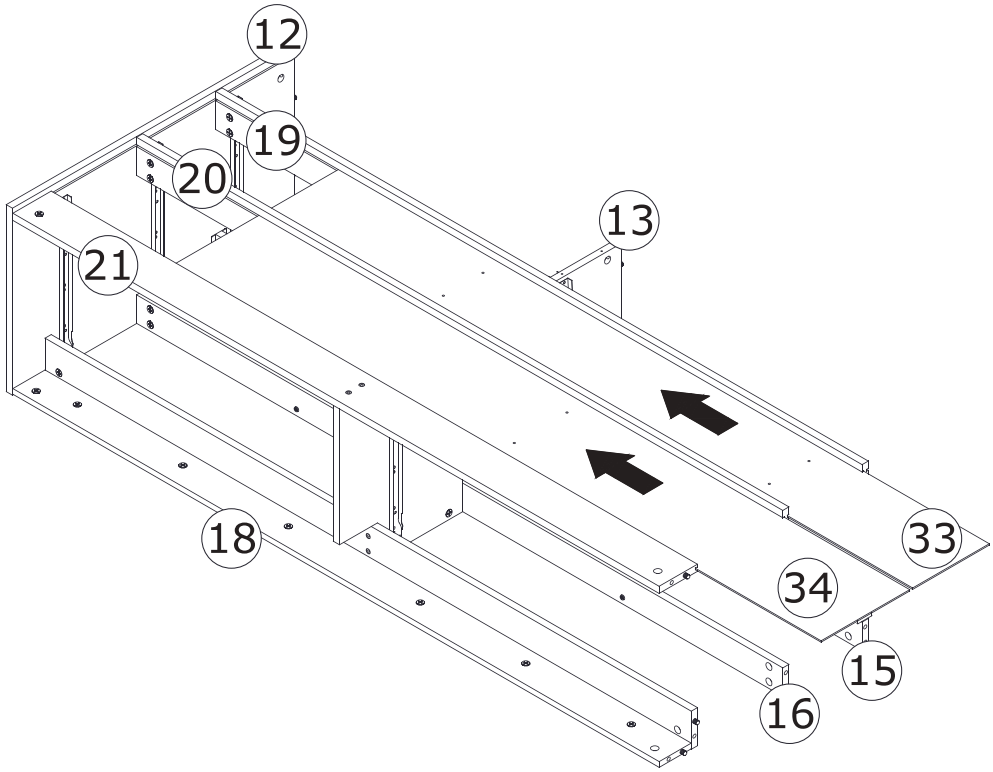

21

A x11	D x 2	M x 10	
 Ø15 x 9.5 mm	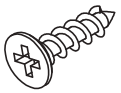 Ø3.5 x 14 mm		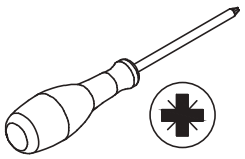

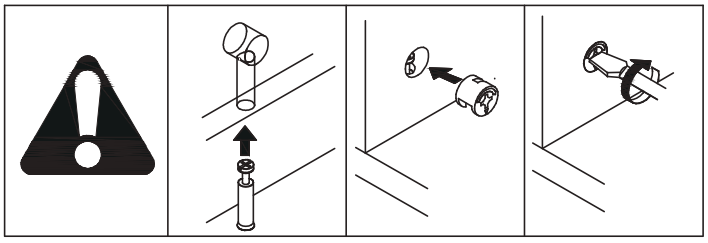

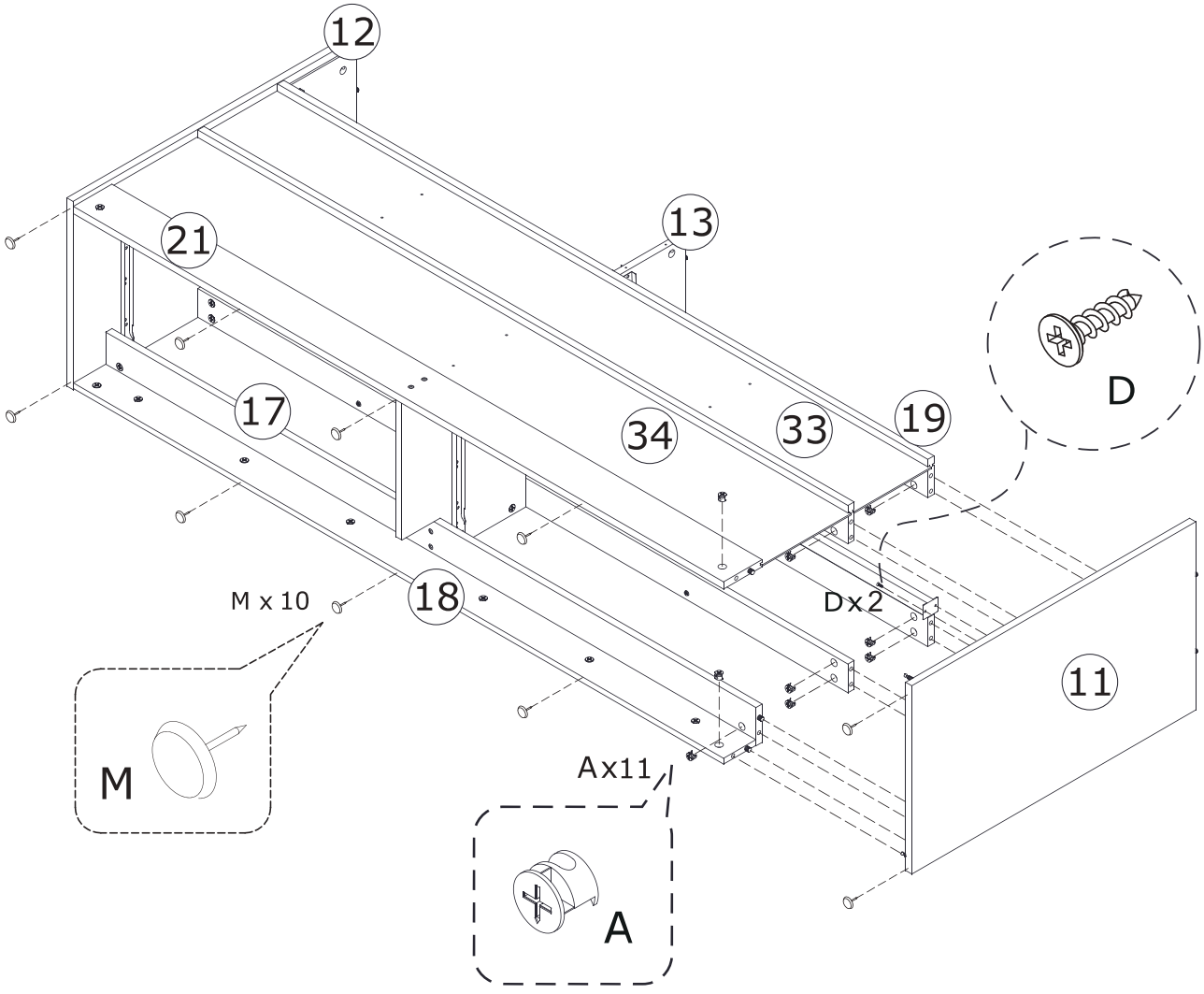

22

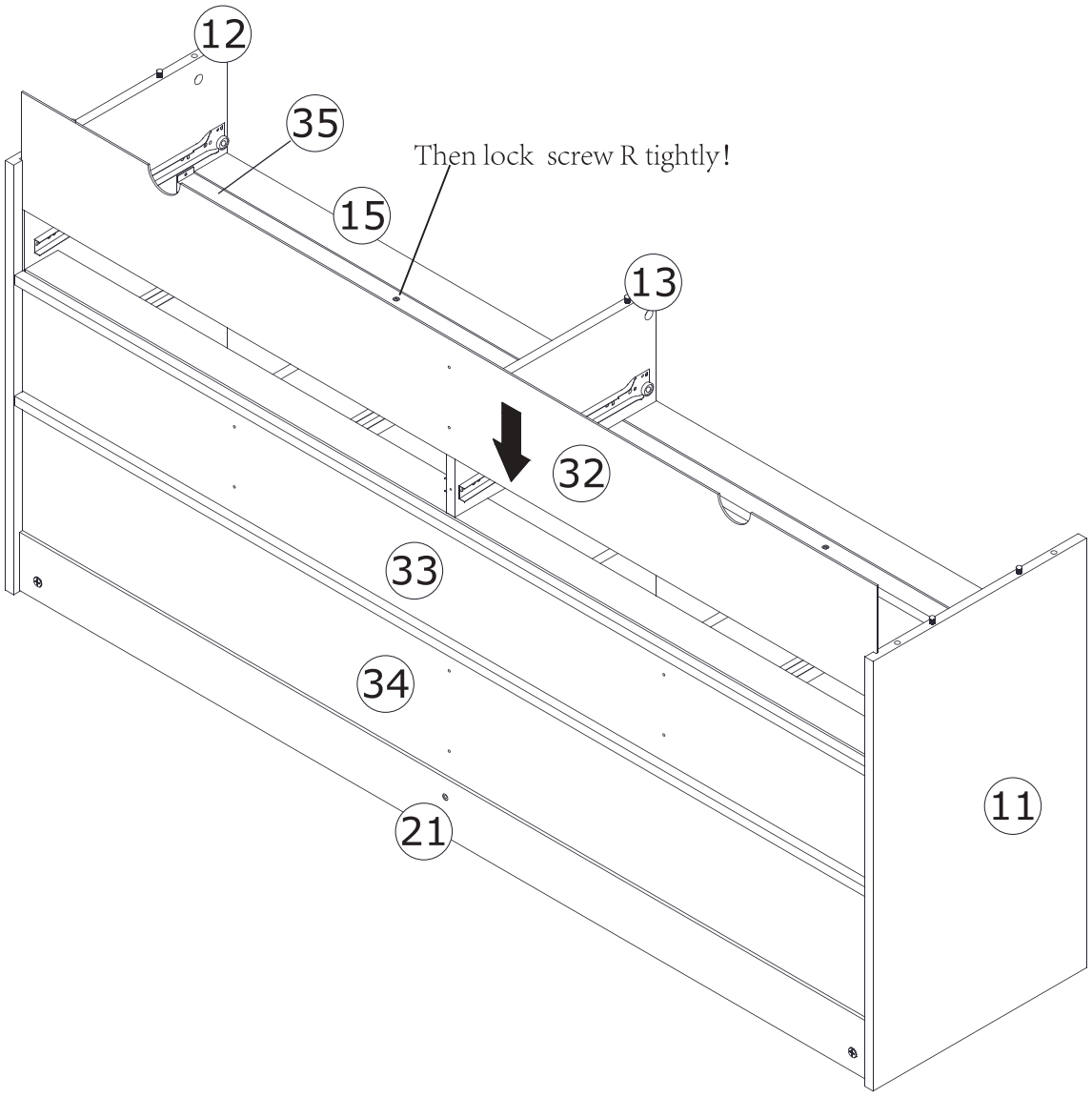

23

A x 6



Ø15 x 9.5 mm

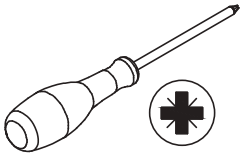

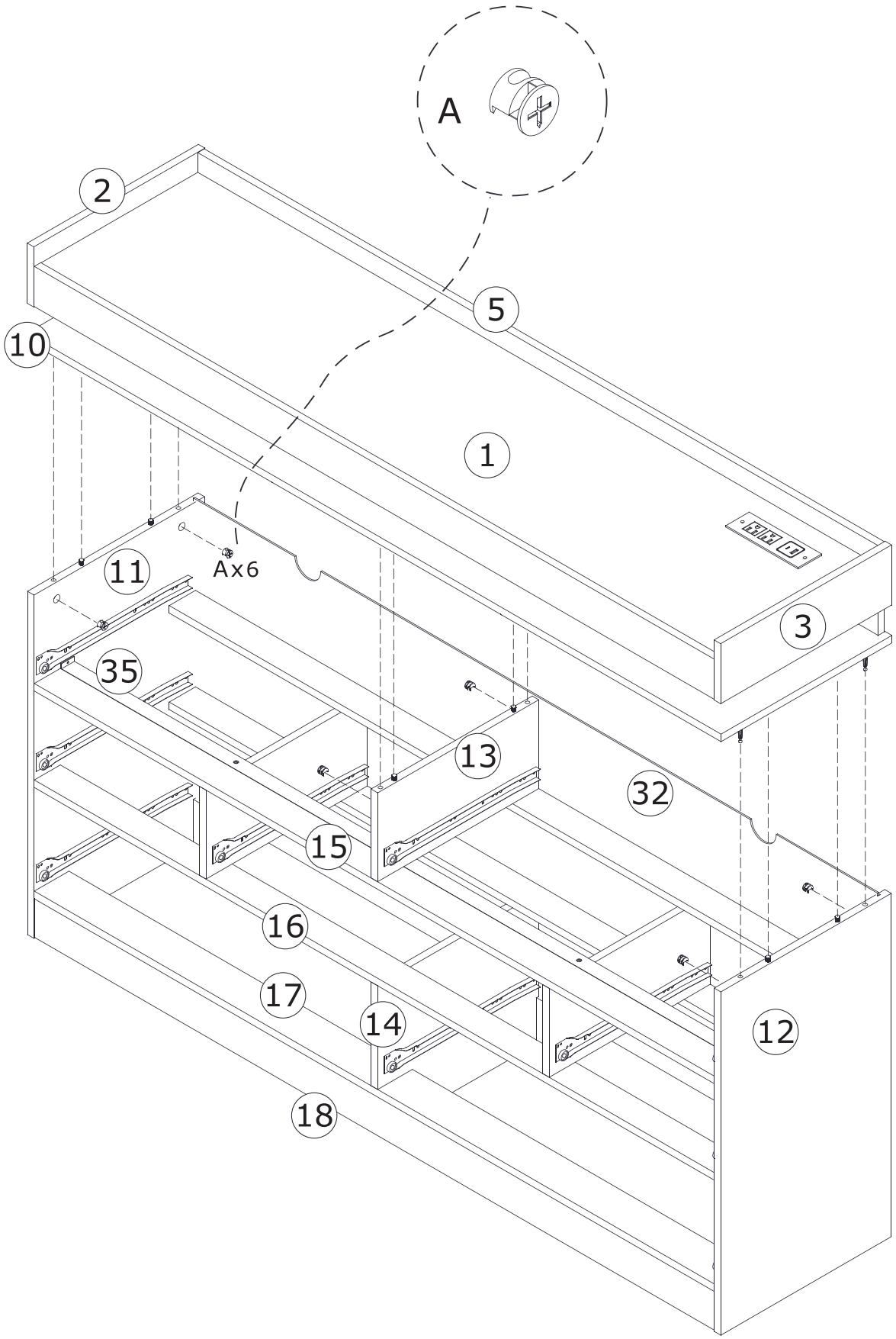

24

H x 24	F x 8	
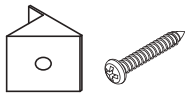	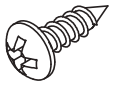 Ø 4 x 14 mm	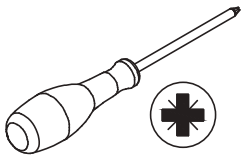

O

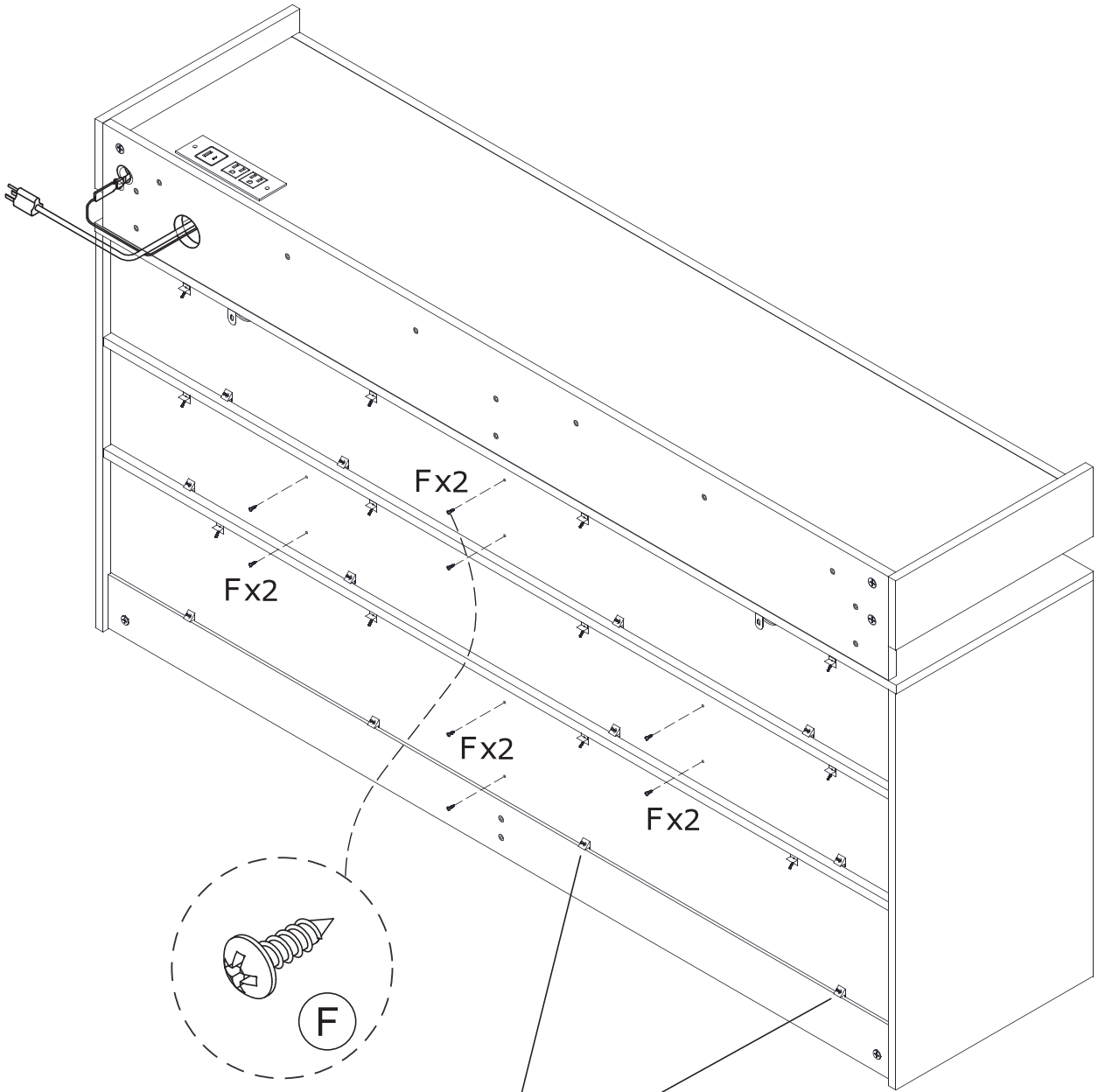

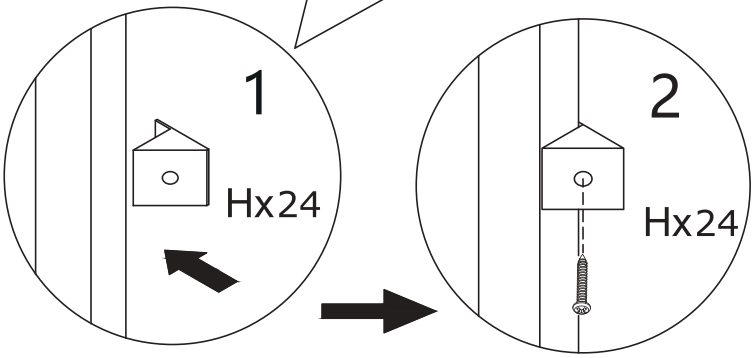

25

N x2

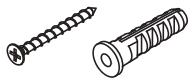

N-4 N-3

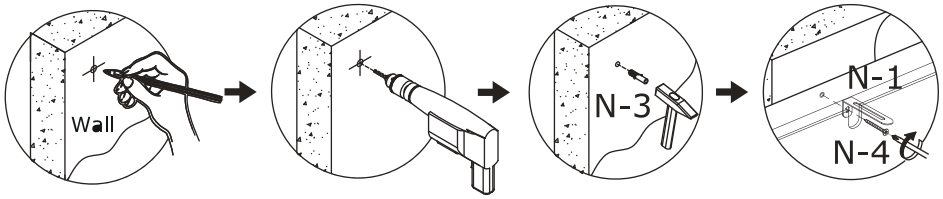

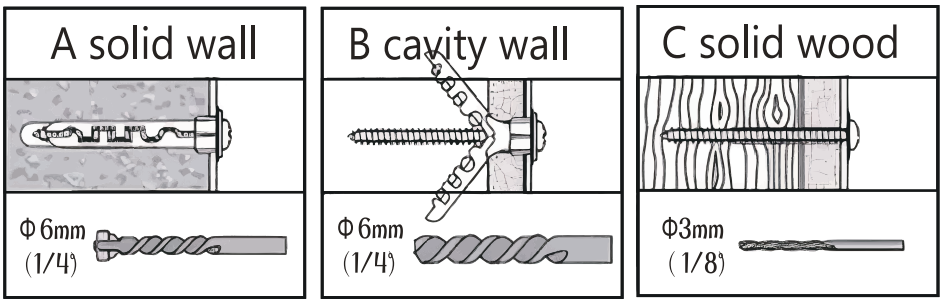

⚠ Warning: If you overturn the furniture, it may cause serious or fatal crushing injuries. We have a wall connection device attached, please use it to hold the furniture following these instructions.

1. Mark the corresponding hole positions where you want to place the furniture;
2. Use a impact drill to drill holes and pay attention to avoid wires and water pipes;
3. Knock the expansion pipes into the wall holes;
4. Place the furniture in the corresponding position and tighten the wall connection device with screws,and lock the N-2 screw tightly.

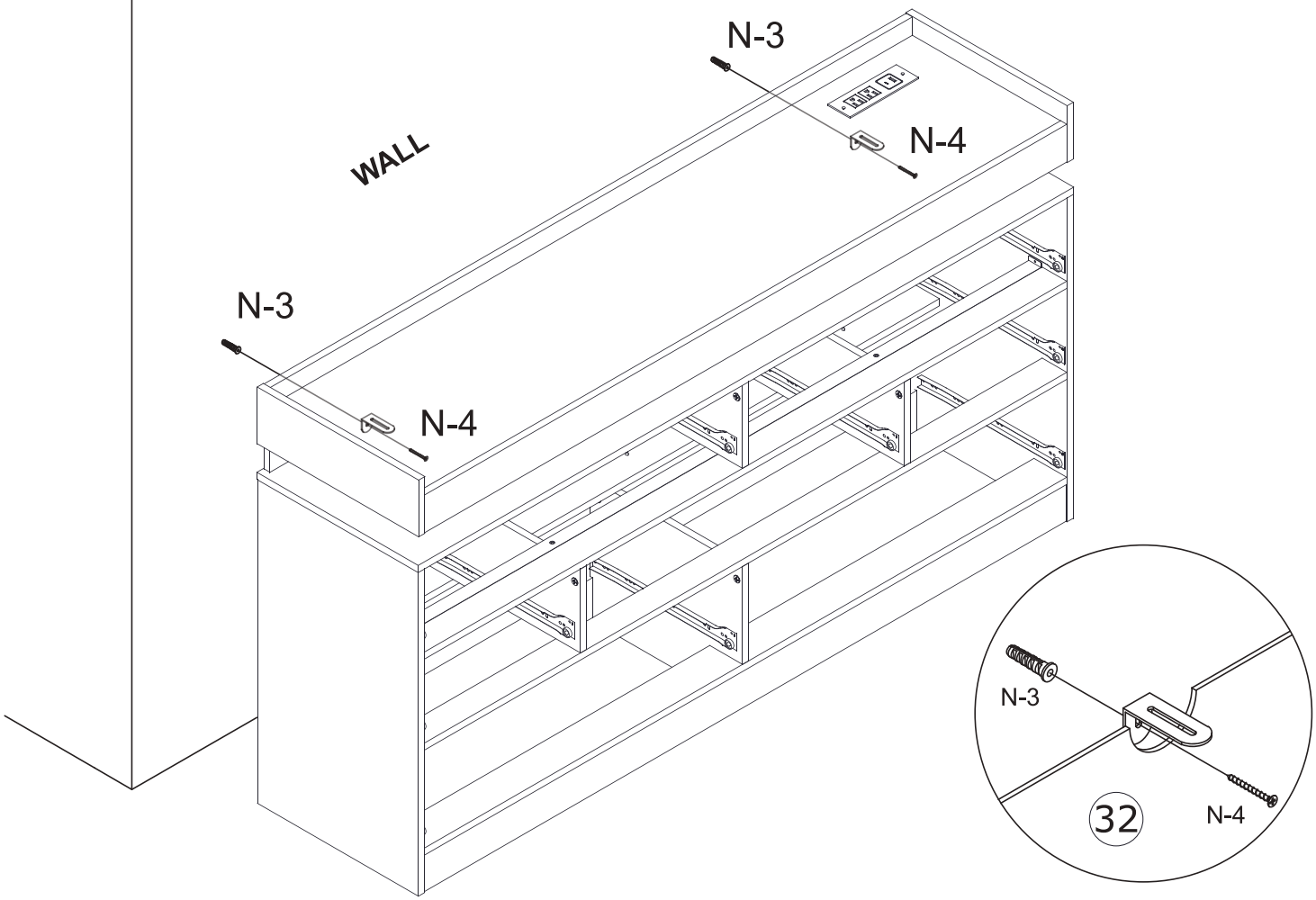

26

K x 33	E x 7	
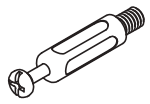	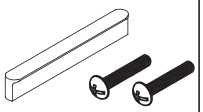	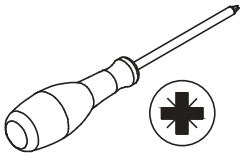
∅7 x 40 mm	∅4 x 16 mm	

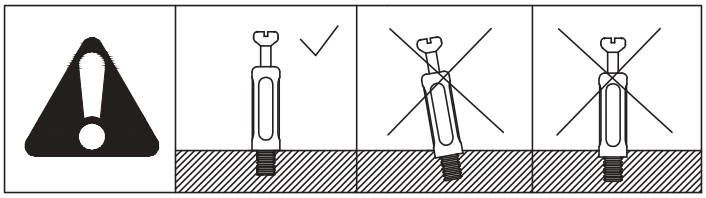

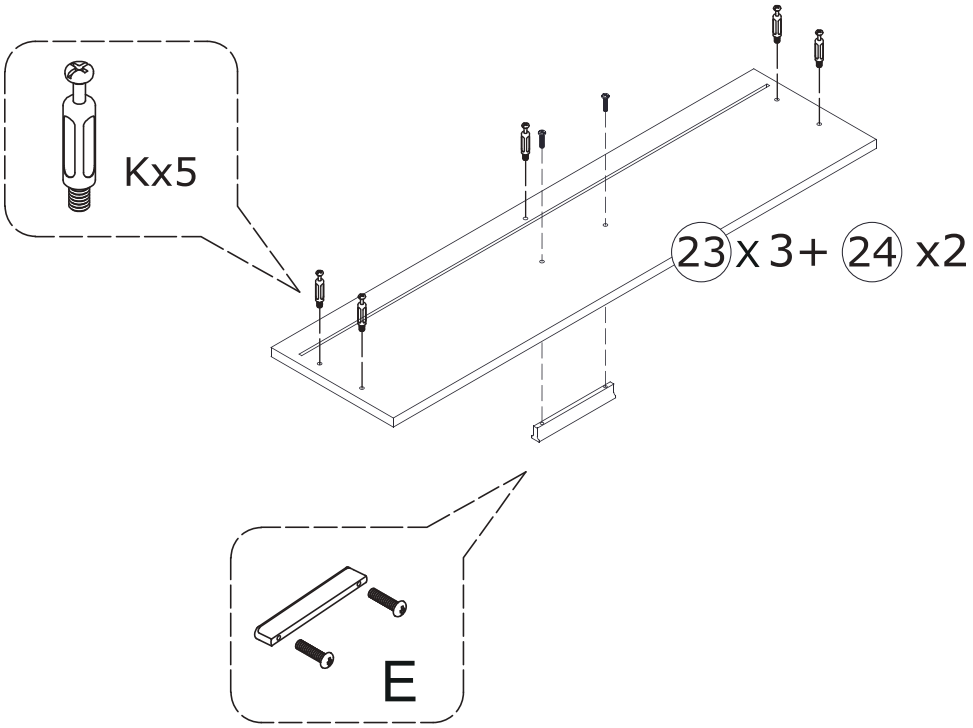

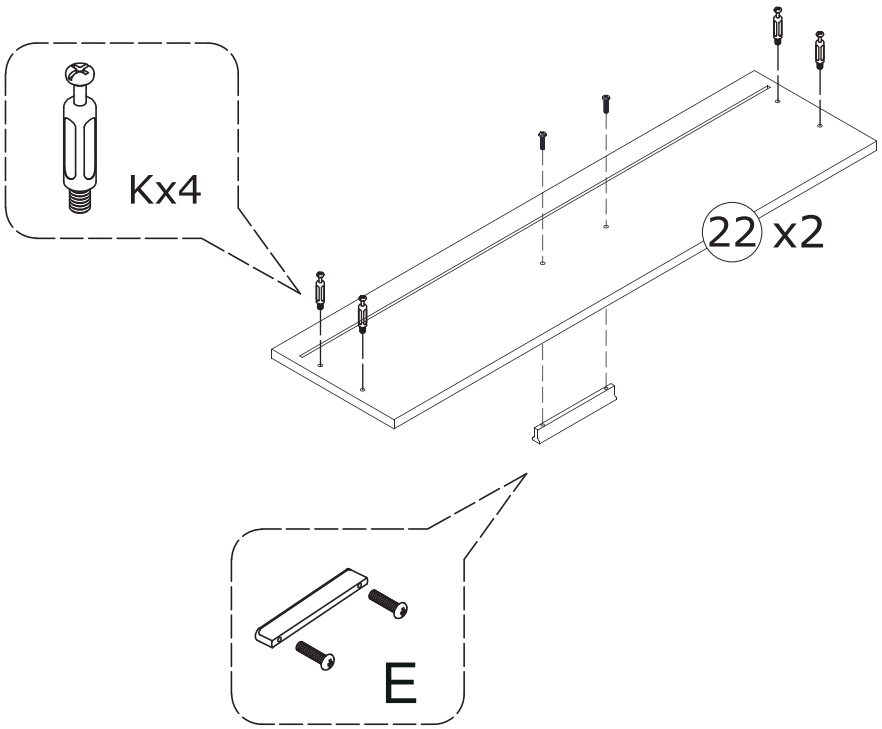

27

I x 8	Q x 6	
	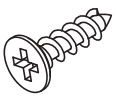	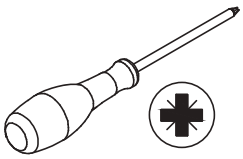
∅4 x 35 mm	∅3.5 x 16 mm	

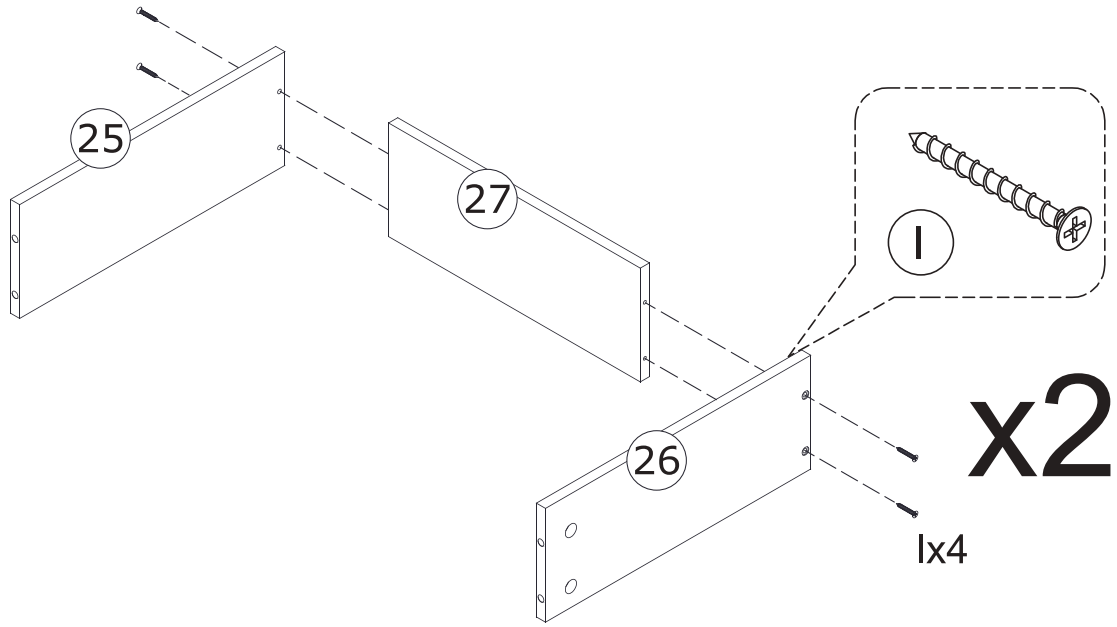

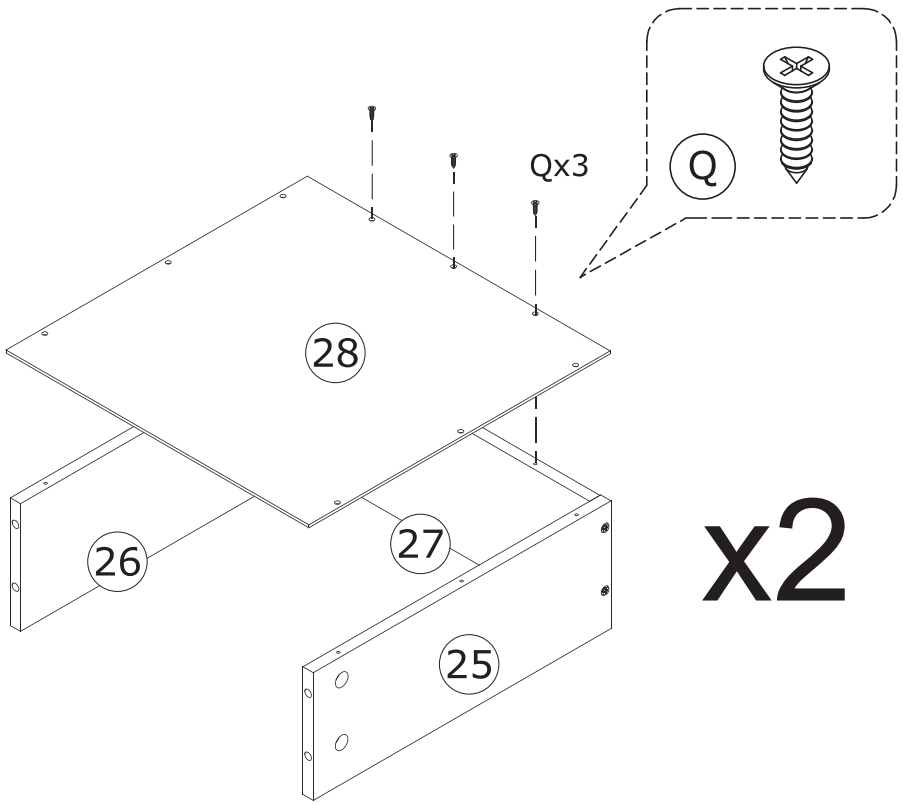

28

Q x 12	DL x 2	DR x 2	A x 8	
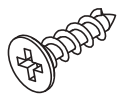	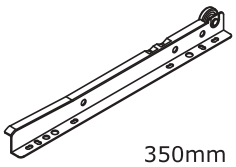	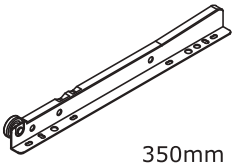		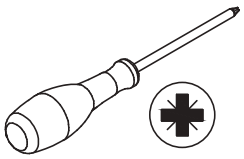
Ø3.5 x 16 mm	350mm	350mm	Ø15 x 9.5 mm	

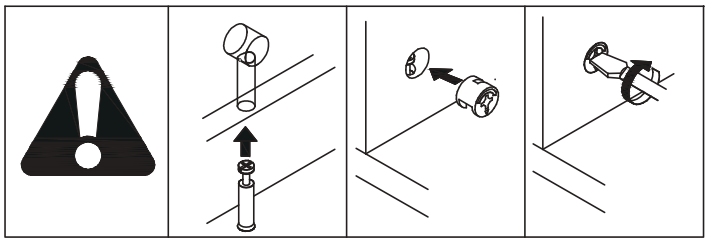

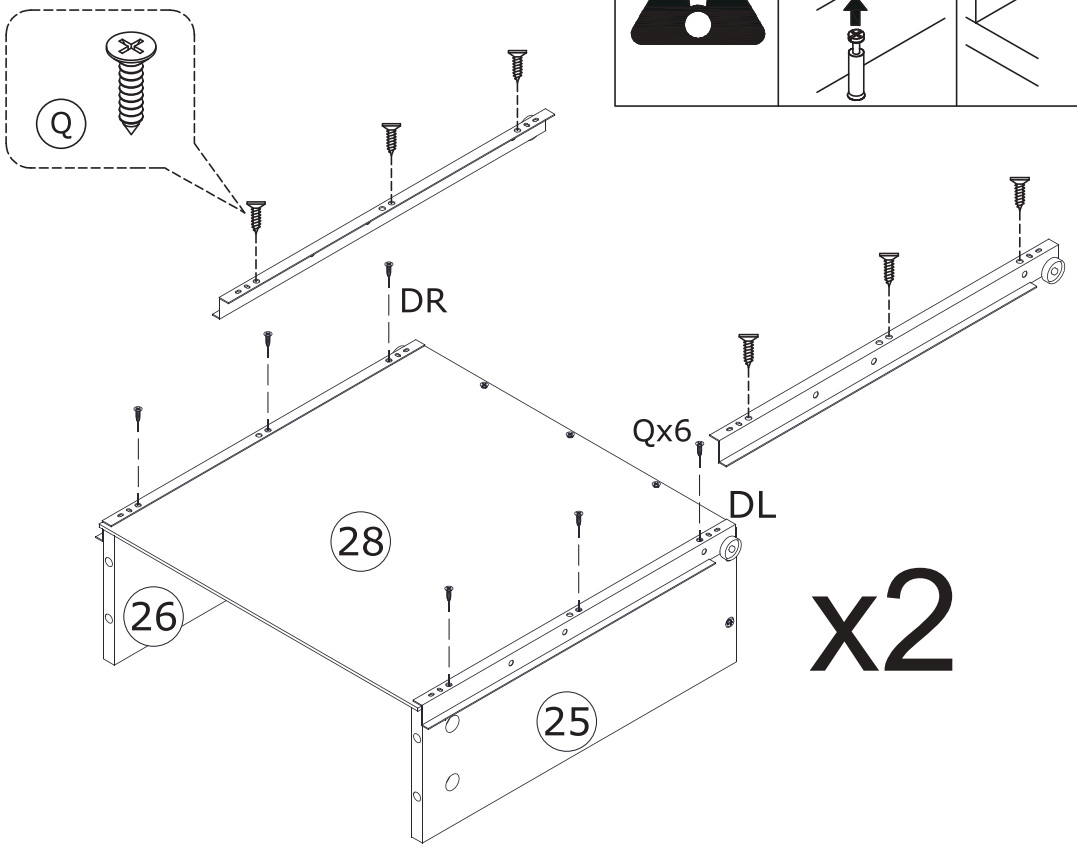

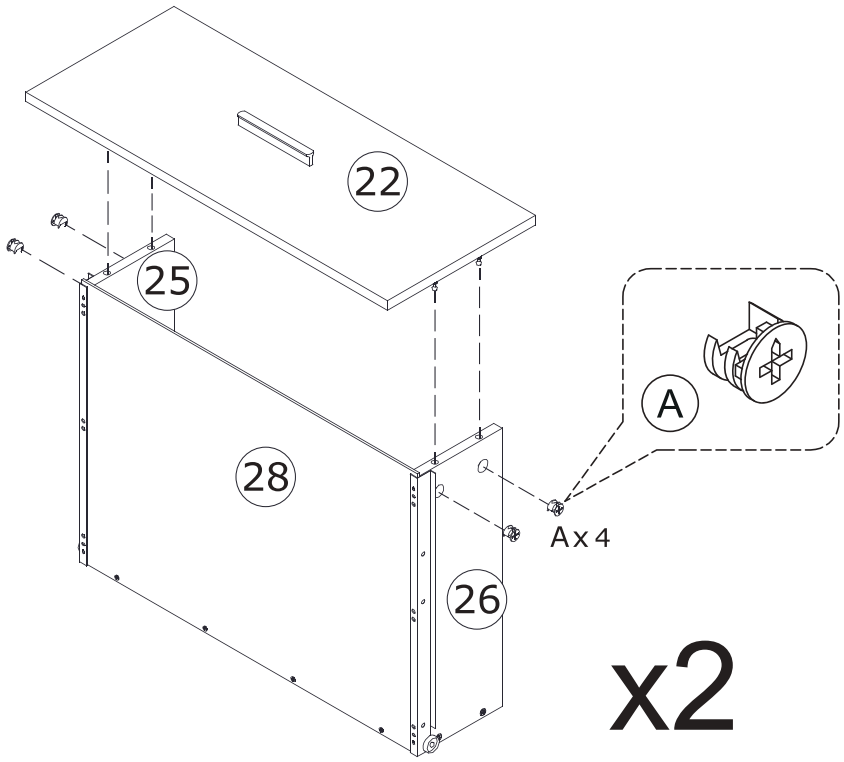

29

I x 20	Q x 30	
	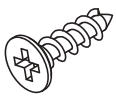	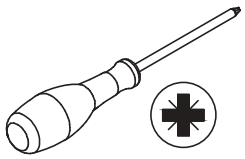
∅4 x 35 mm	∅3.5 x 16 mm	

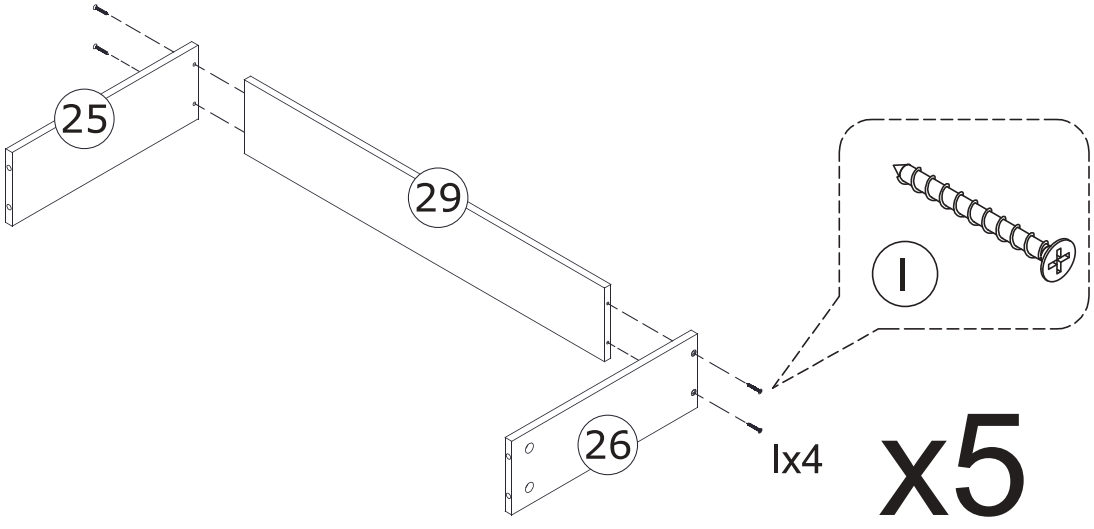

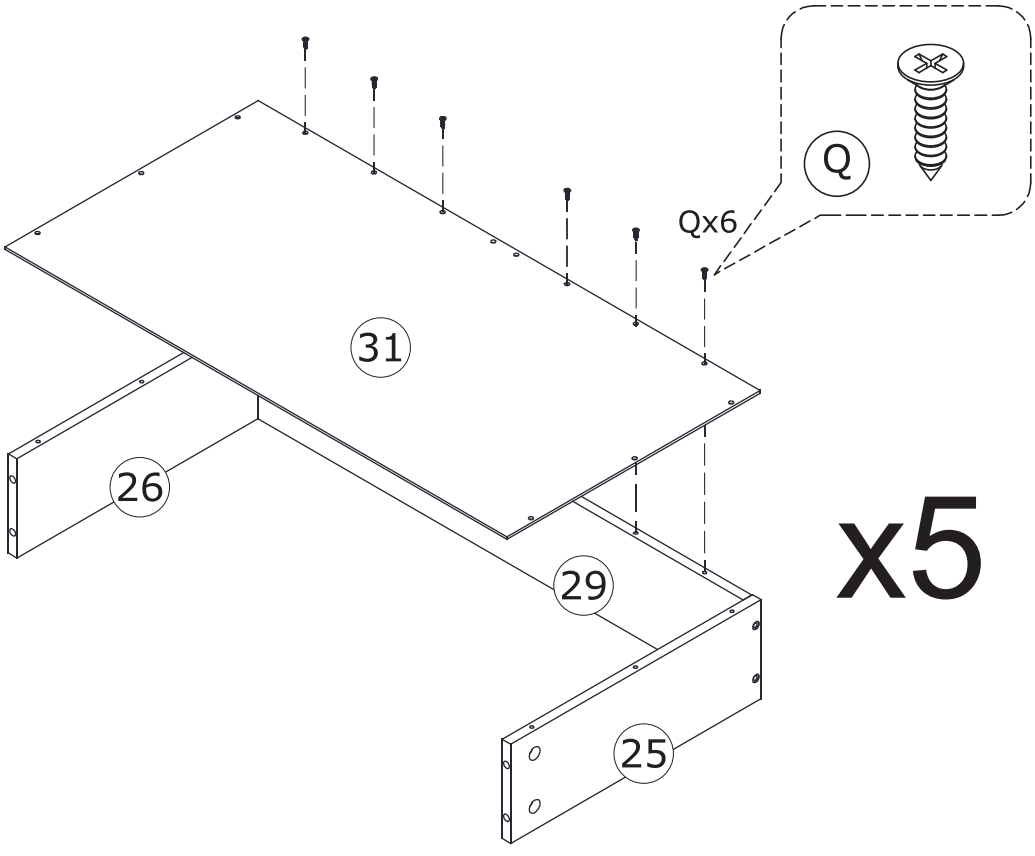

30

I x 10	Q x 30	DL x 5	DR x 5	A x 25	
	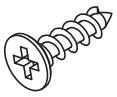	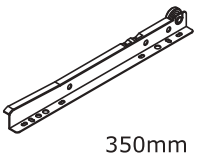	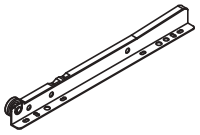		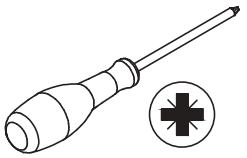
Ø4 x 35 mm	Ø3.5 x 16 mm	350mm	350mm	Ø15 x 9.5 mm	

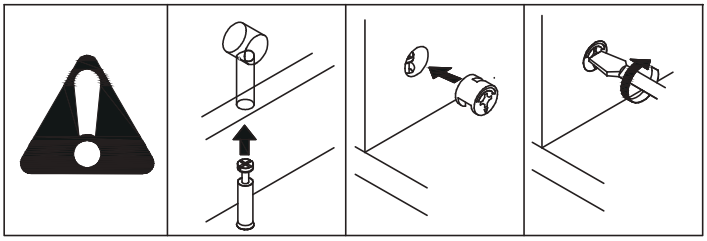

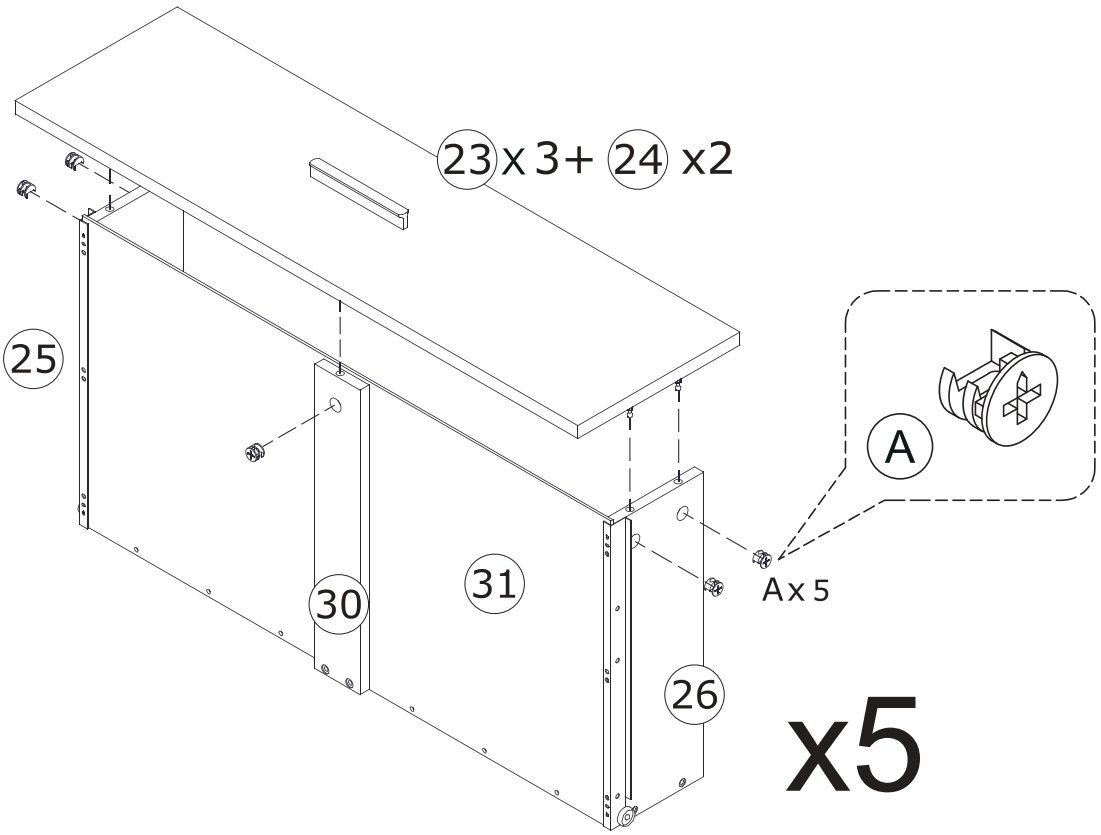

31

J x 105	P x 2	
	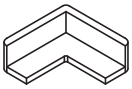	

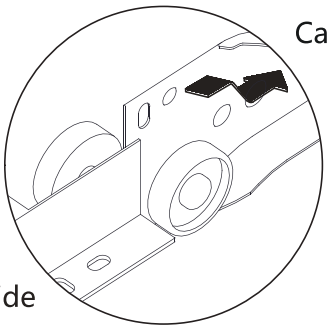

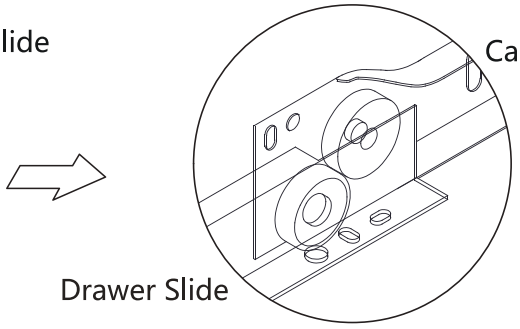

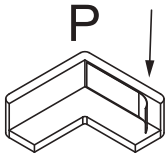

Peel off the protective film first and stick it well.

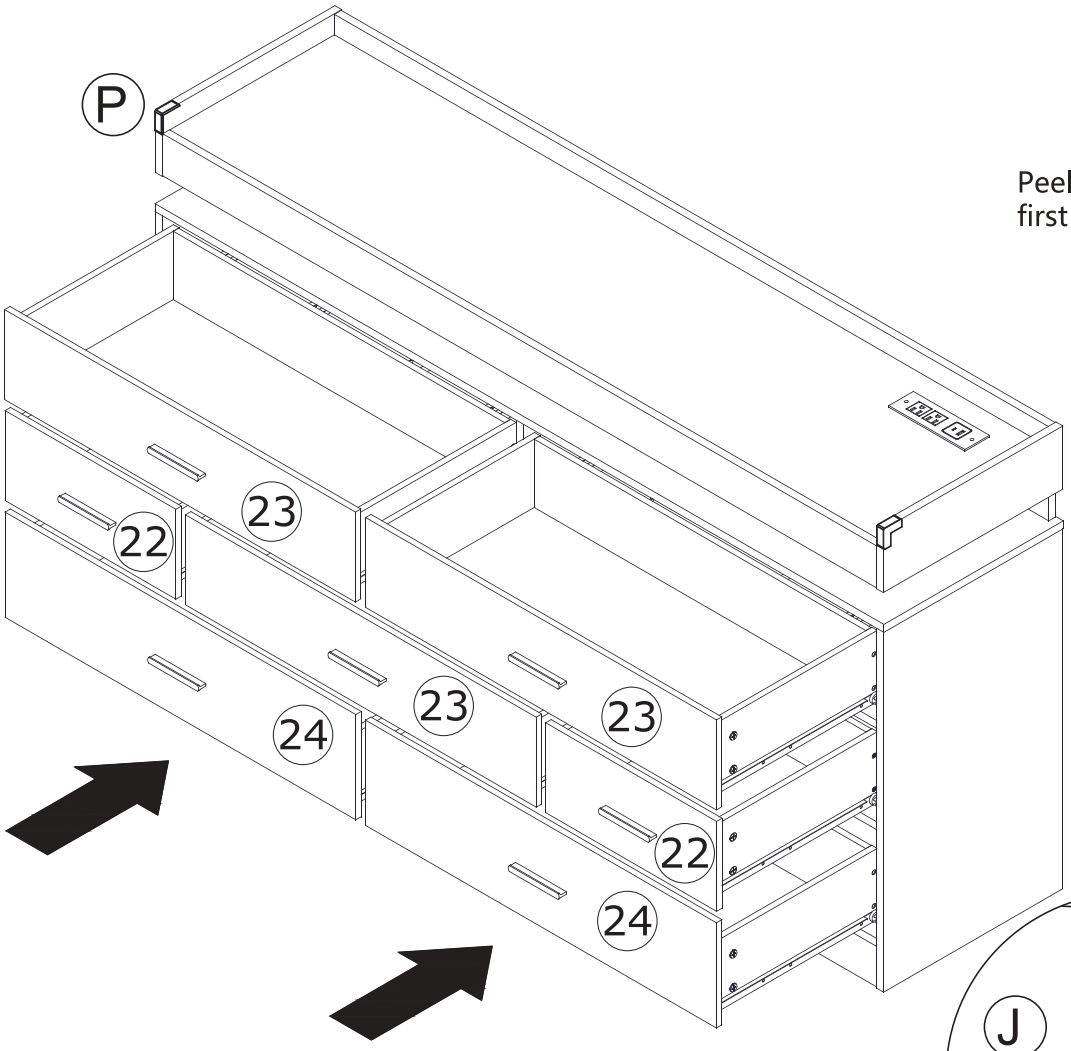

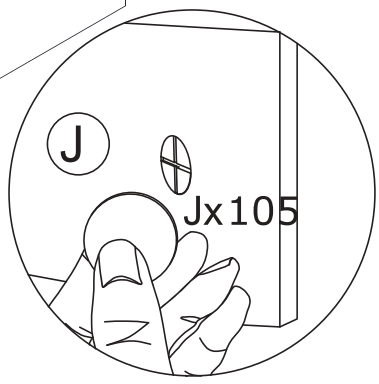

Stick the ring patch J on the lock holes!

32

-LED lamp with effective remote control distance of 5 meters

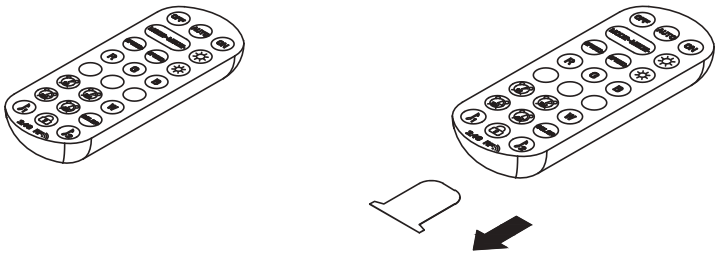

1.Take out the remote control gasket

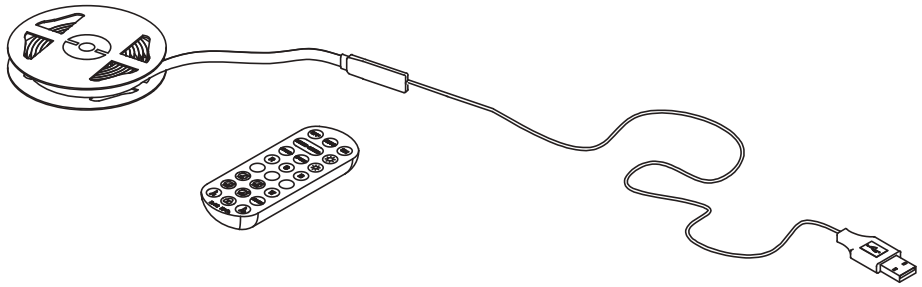

2.Align romote controller to the RGB Control box to adjust the color mode

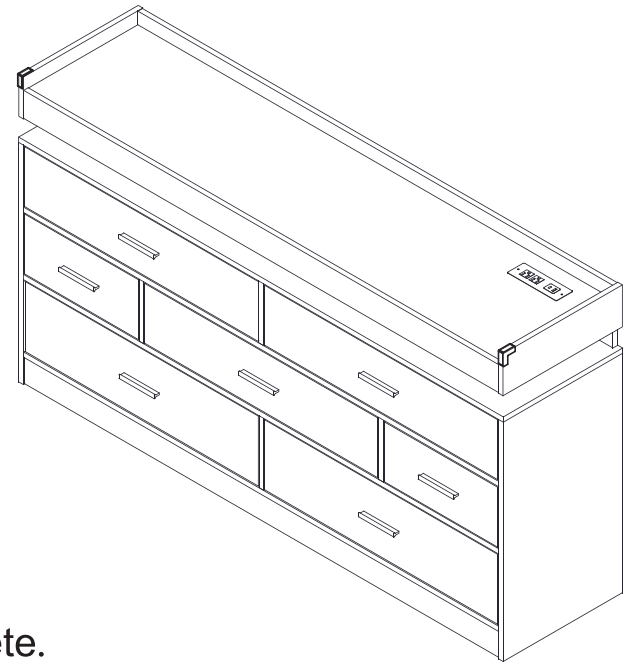

- Installation complete.

33

APP PROGRAM USAGE



Scan two-dimensional code download APP

① Connect LED color strip and controller, power on controller

② Scan two-dimensional code download APP:

③ Start APP, search and connect controller

④ Enjoy the Bluetooth wireless control experience

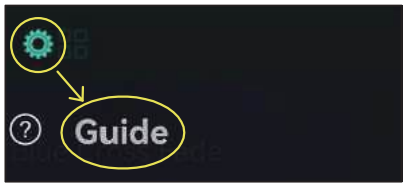

Notes:
detailed operating instructions, enter the menu "Guide":

Product Paramters:
- Bluetooth: BLEV4.2
- Input Voltage:4.5~26V
- Working Temp:-25~75℃
- Size:43*22*11mm
- Weight:30g
- Max Power:144W(24V)

LED mobile phone Bluetooth controllerProduct Features

- LED Bluetooth controller is directly via mobilephone control remote distance can reach 20m without the need to set up, easy to connect open the software within 5 seconds you can automatically connect the controller
- Flow the rhythm of the music changes
- Group control
- Brightness, speed addition and subtraction
- Maximum can be 10 meters RGB(W) strip
- The software shows that the text is based onthe language of the mobile phone set up automatic transformation of Chinese and English

Animation Effect:
- Colorful gradient
- All kinds of monchrome, double color gradient
- All kinds of monochrome, double color,colorfull flashing
- Colorful jump
- Follow the thythm of the music chagnes