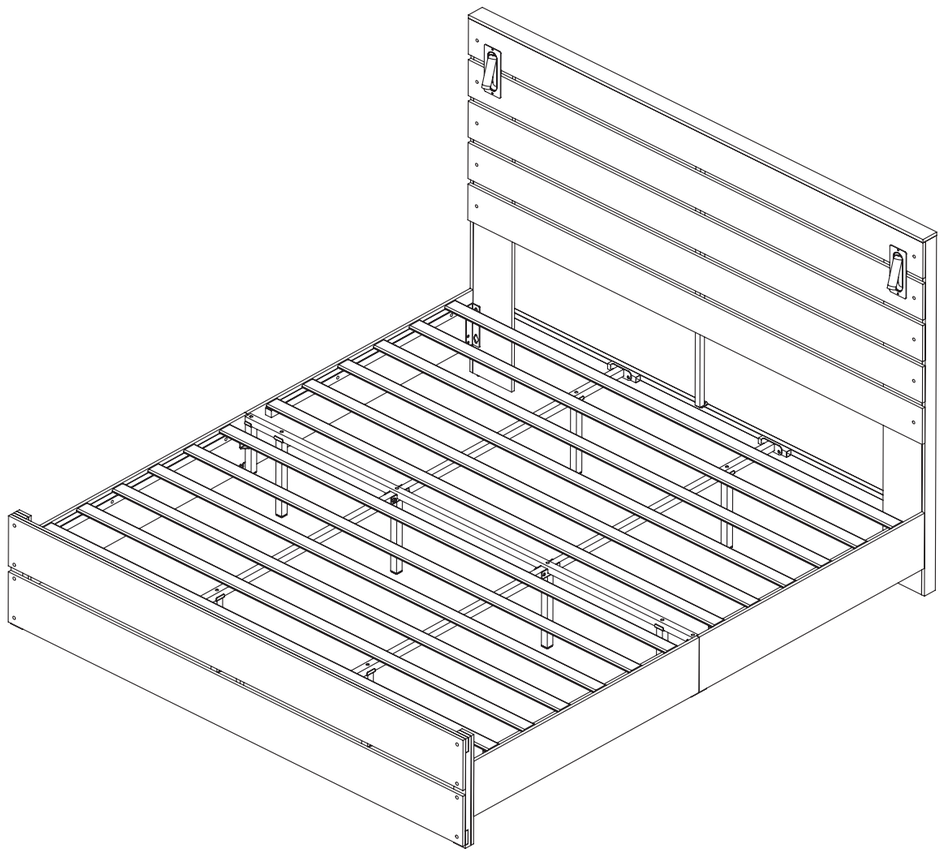
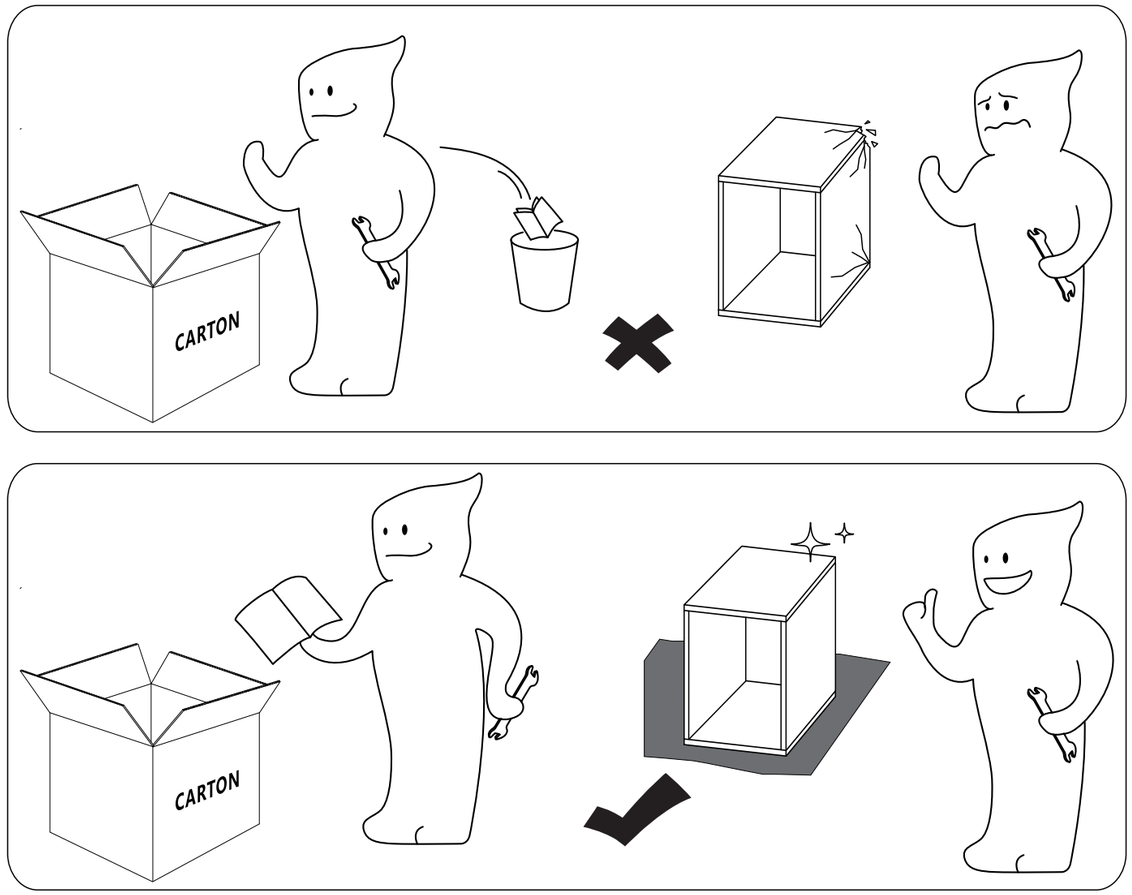
Panel Bed-K
Assembly Instructions



ASSEMBLY INSTRUCTIONS

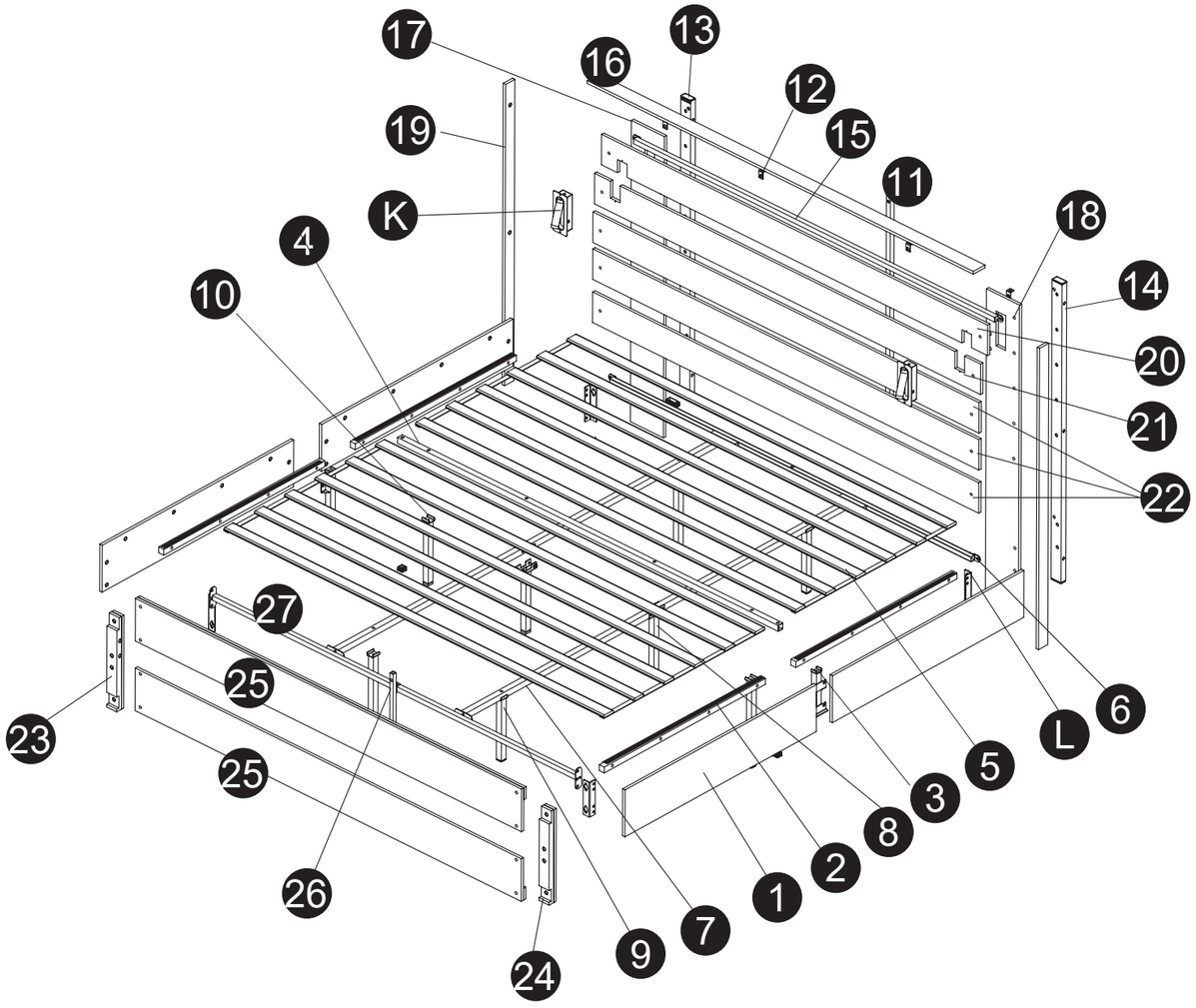
IMPORTANT

Please follow the instruction manuals and use a pad to protect the product during your assembly.

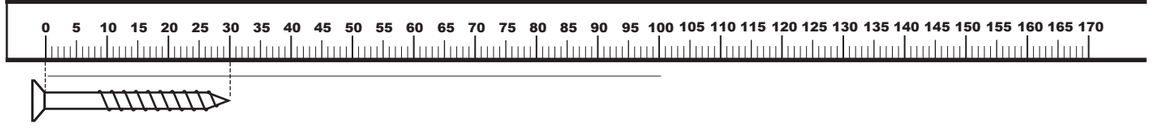


Note:
1. Should be assembled on flat ground to keep balance.
2. Before completing the installation, do not tighten the screws.

For easier and better assembly, **2** or more adults are required.

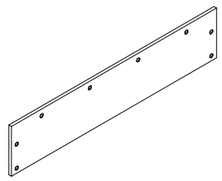
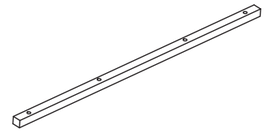
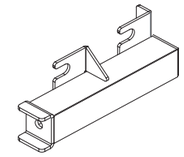
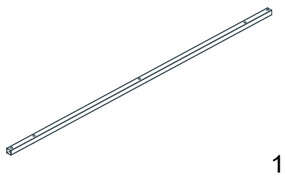
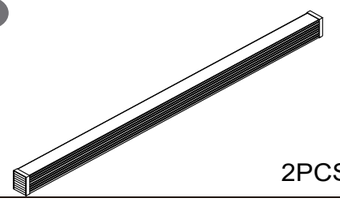
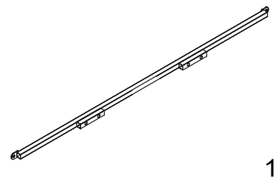
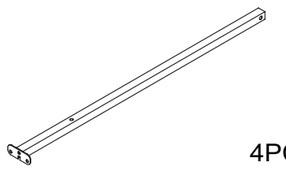
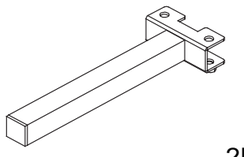
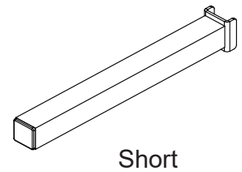
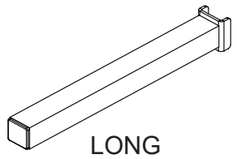
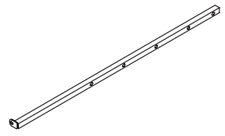
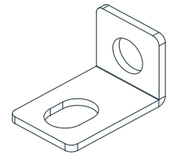
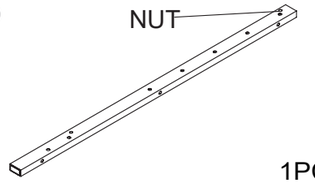
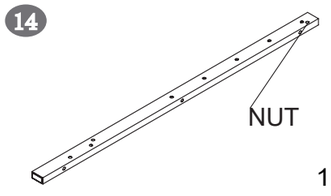
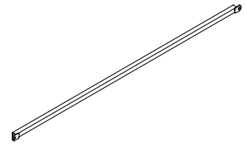
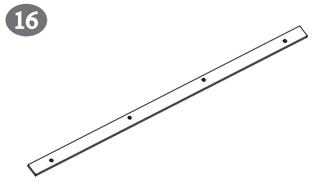
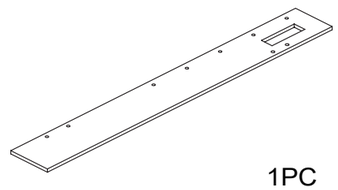
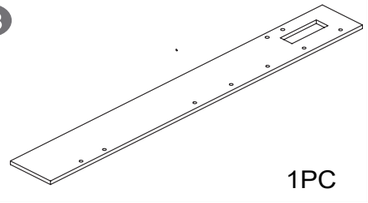
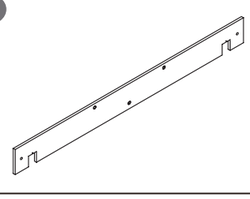
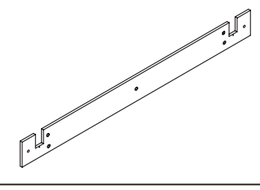


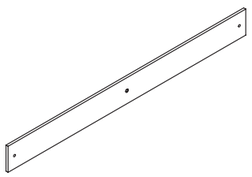
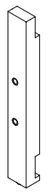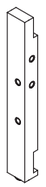
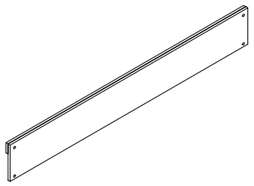
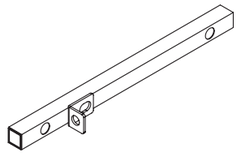
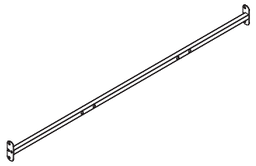
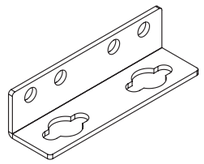
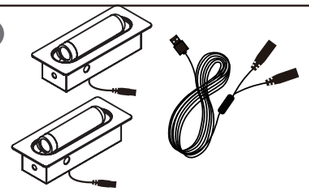
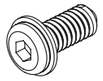
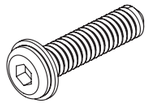
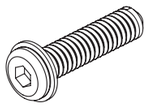
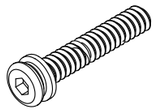
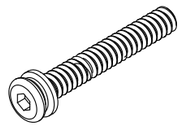
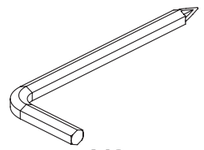
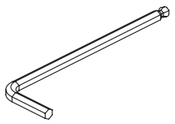
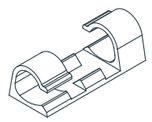
Ruler - Use this ruler to help correctly identify the screws



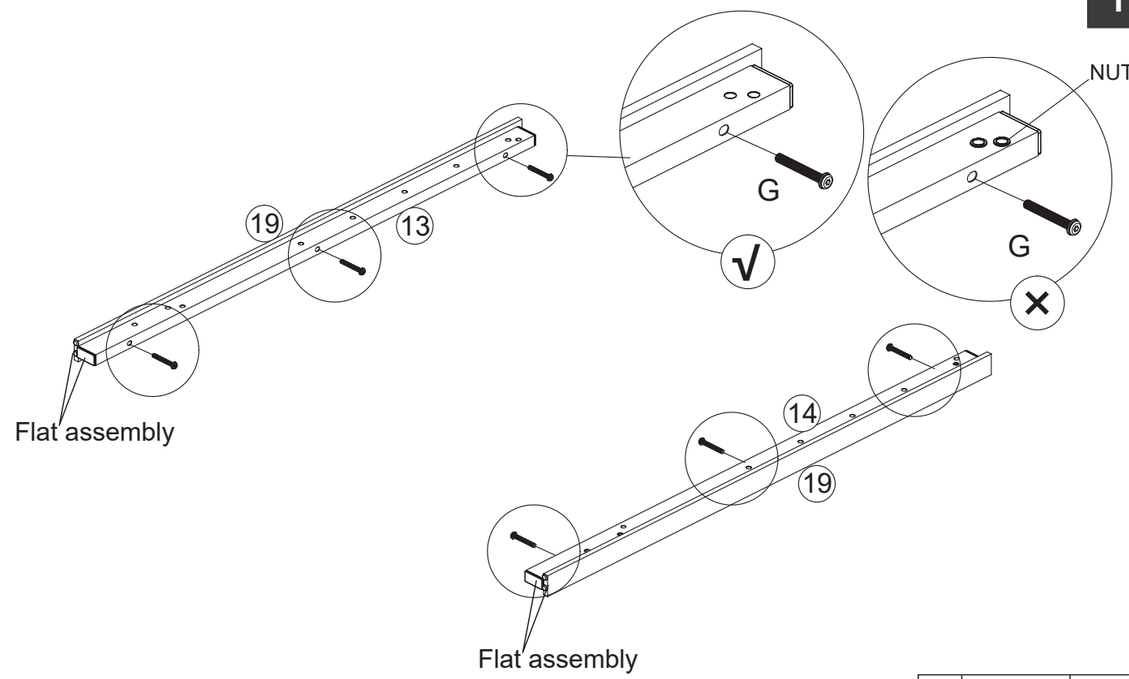
The lenath of the screw is measured from the rod part excluding the screw cap (30mm screw shown）

PARTS LIST

1  4PCS	2  4PCS	3  2PCS
4  1PC	5  2PCS	6  1PC
7  4PCS	8  2PCS	9  Short 4PCS
10  LONG 2PCS	11  1PC	12  4PCS
13 NUT  1PC	14 NUT  1PC	15  1PC
16  1PC	17  1PC	18  1PC
19 2PCS	20  1PC	21  1PC

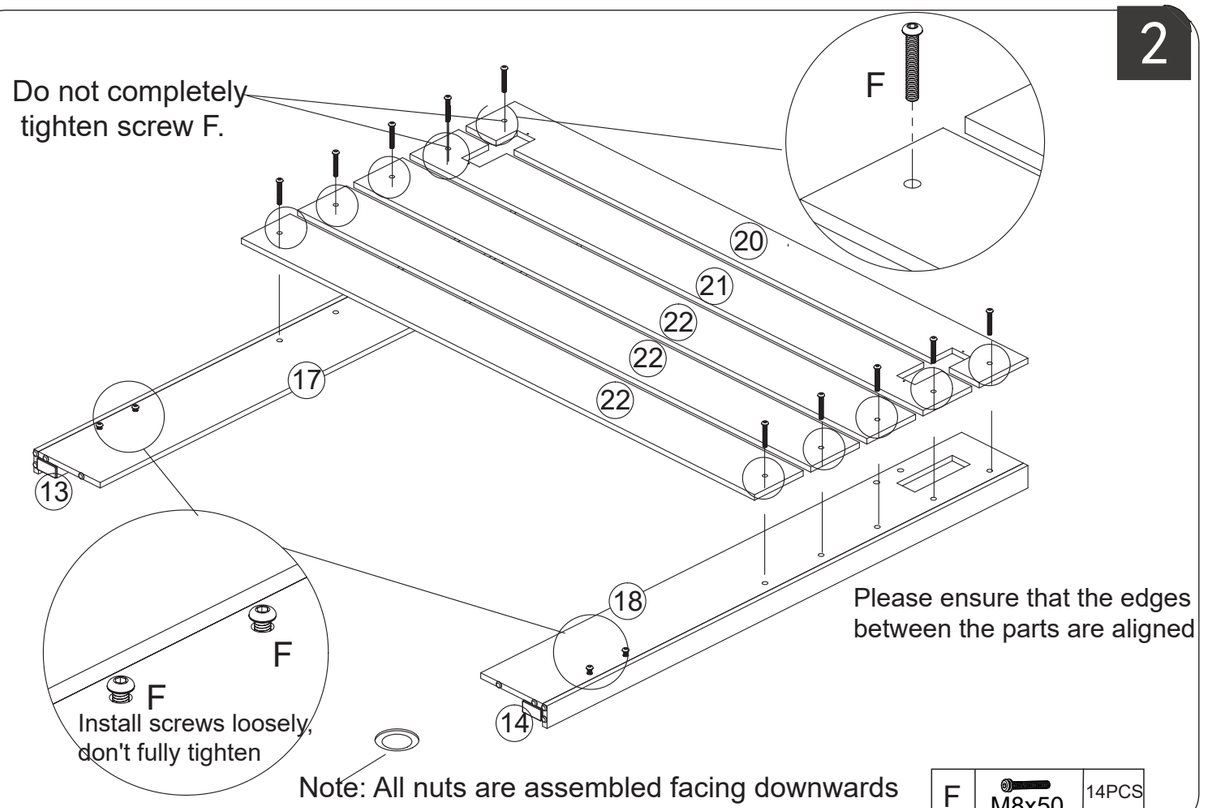
22  3PCS	23  1PC	24  1PC
25  2PC	26  1PC	27  1PC
L  4PCS	K  1PC	
A  M8x12 white zinc 28PCS	B  M8x20 22PCS	C  M8x25 Color Zinc 2PCS
D  M8x30 white zinc 5PCS	E  M8x35 32PCS	F  M8x50 20PCS
G  M8x60 6PCS	H  ST4.2x12 4PCS	I  M8 1PC
J  M8 1PC	M  4PCS	

1



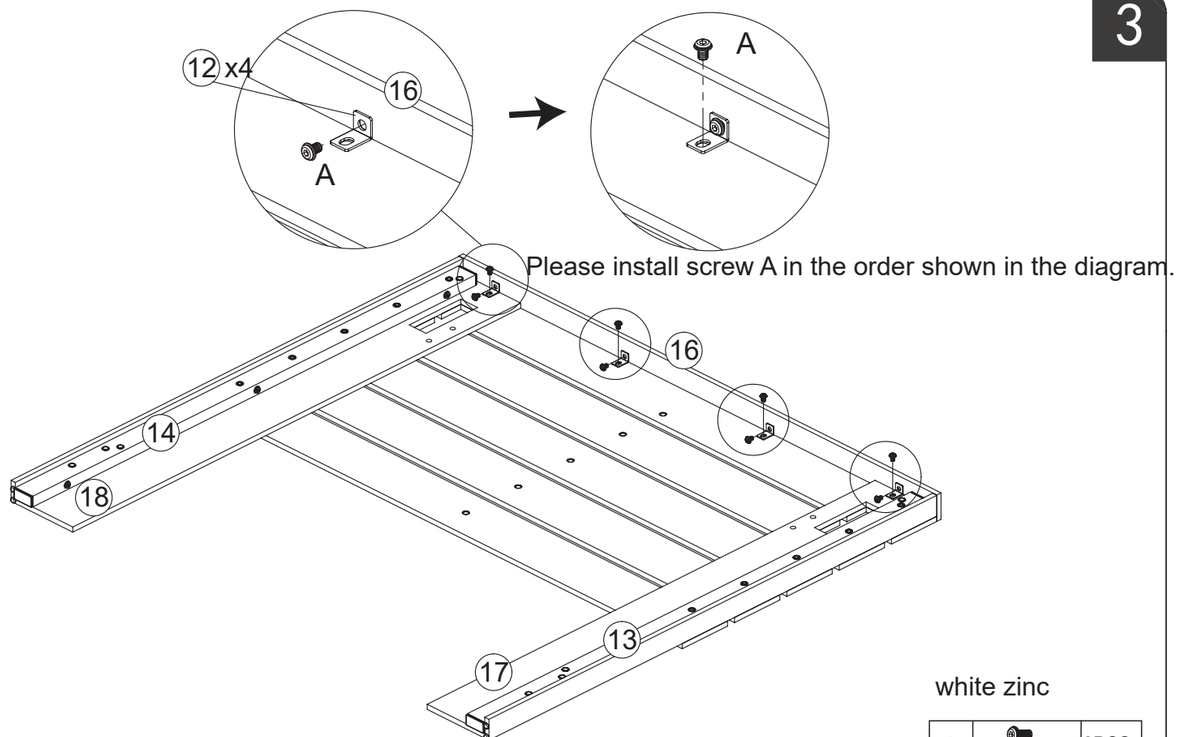
G	M8x60	6PCS

2



F	M8x50	14PCS

3

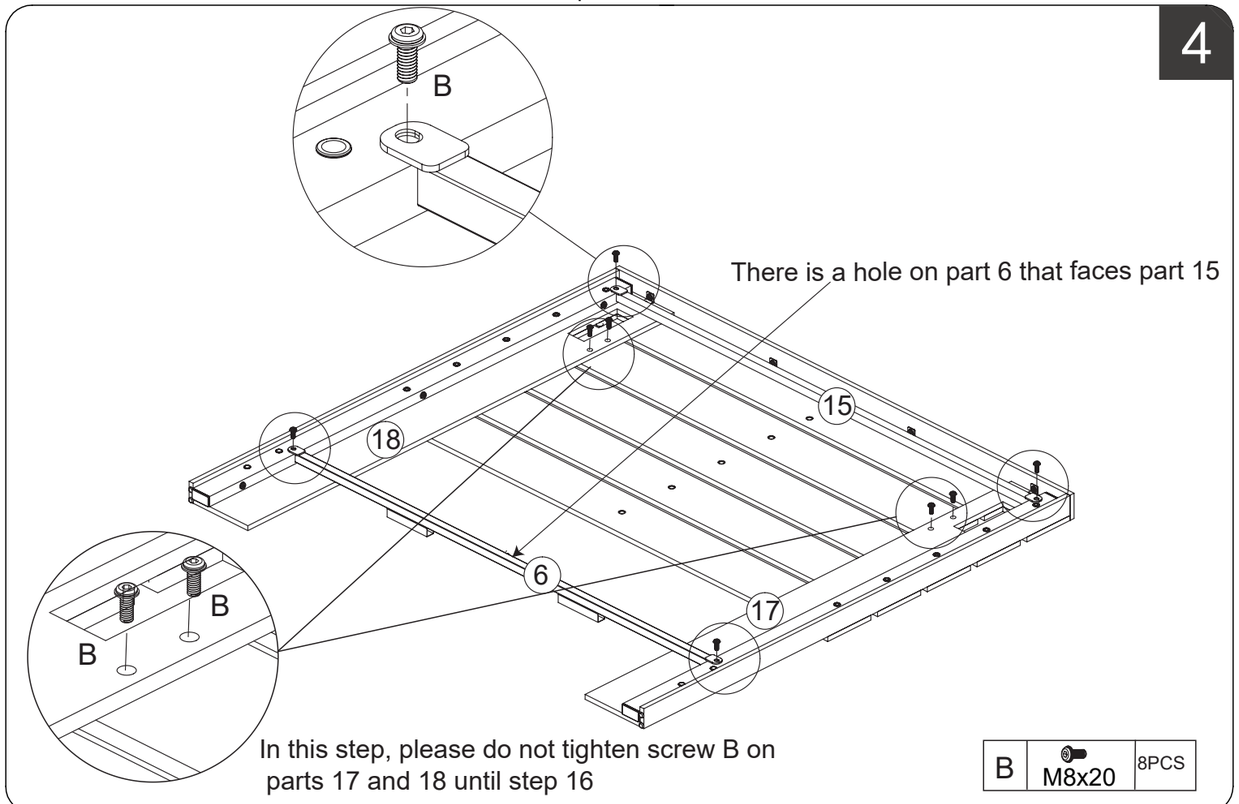


Please install screw A in the order shown in the diagram.

white zinc

A	M8x12	8PCS

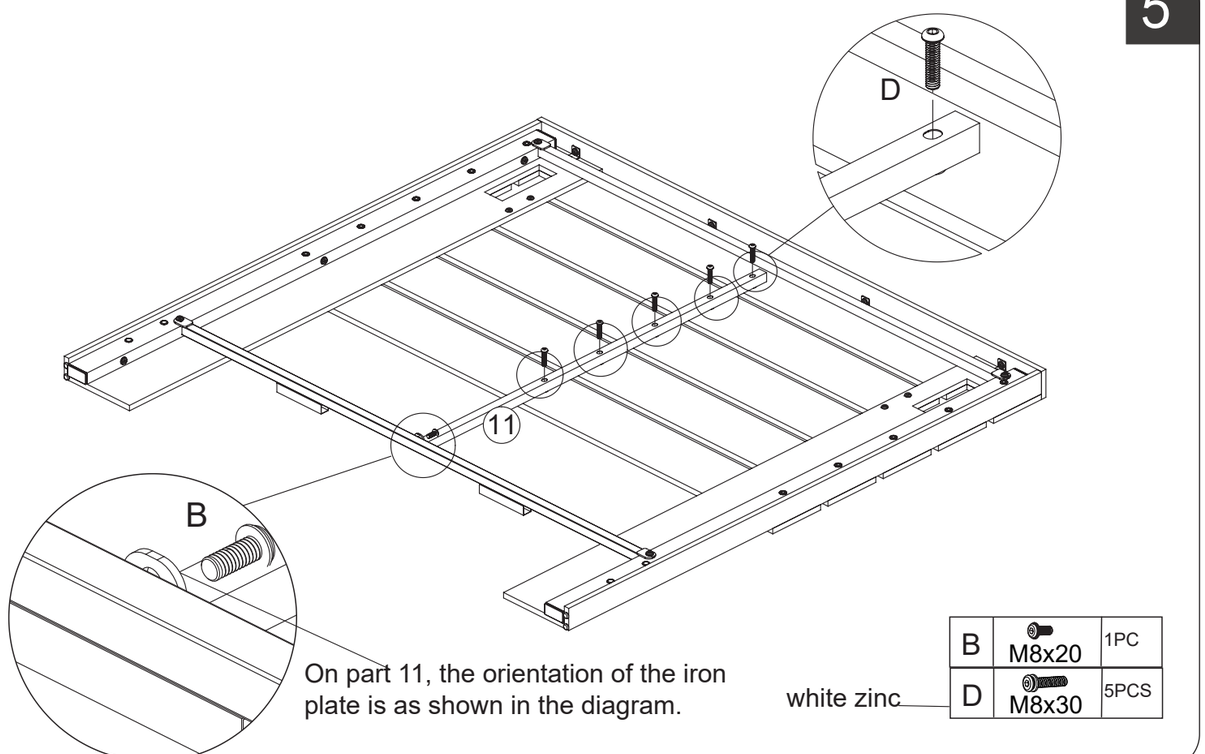
4



In this step, please do not tighten screw B on parts 17 and 18 until step 16

B	M8x20	8PCS

5

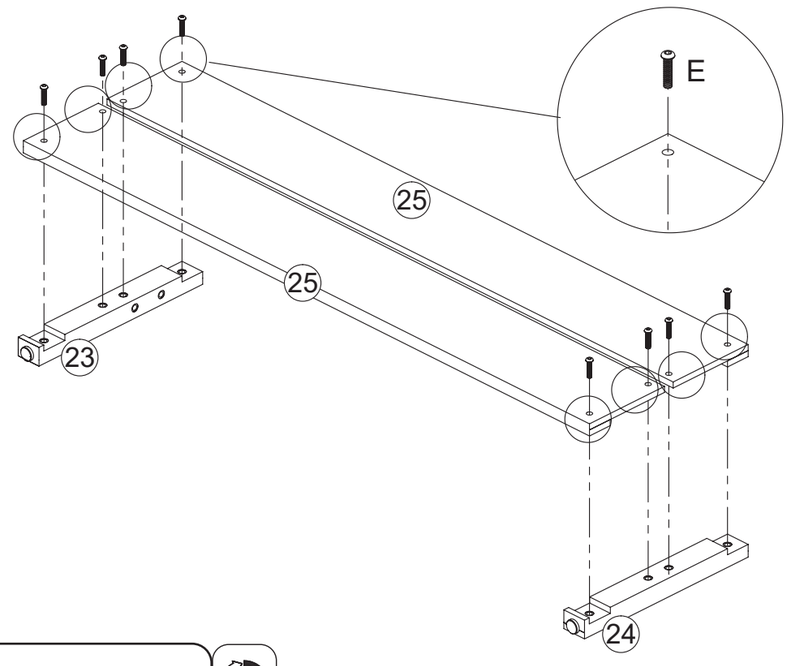


On part 11, the orientation of the iron plate is as shown in the diagram.

white zinc

B	M8x20	1PC
D	M8x30	5PCS

6

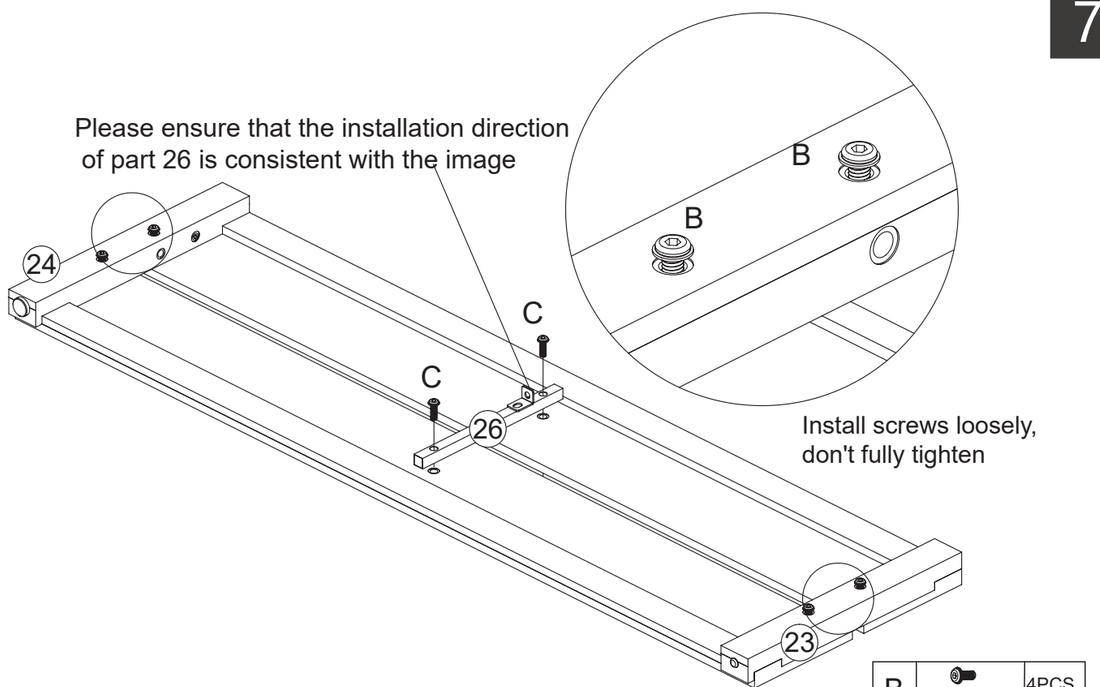


Do not completely tighten screw E.



E	M8x35	8PCS

7

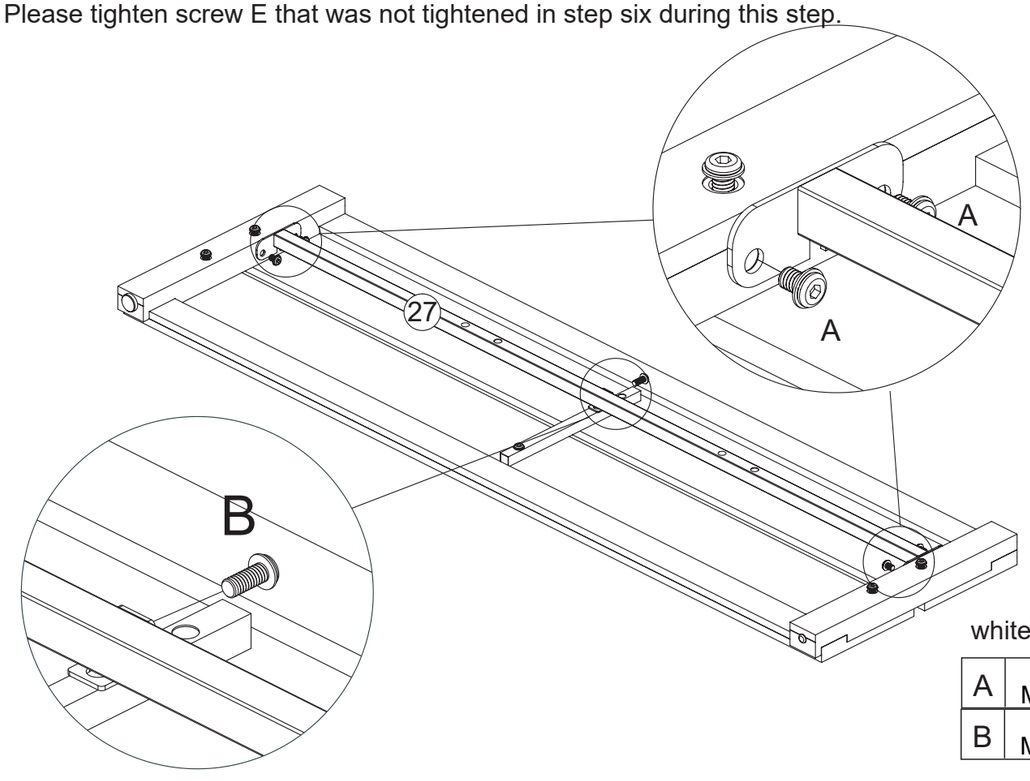


B	M8x20	4PCS
C	M8x25	2PCS

Color Zinc

8

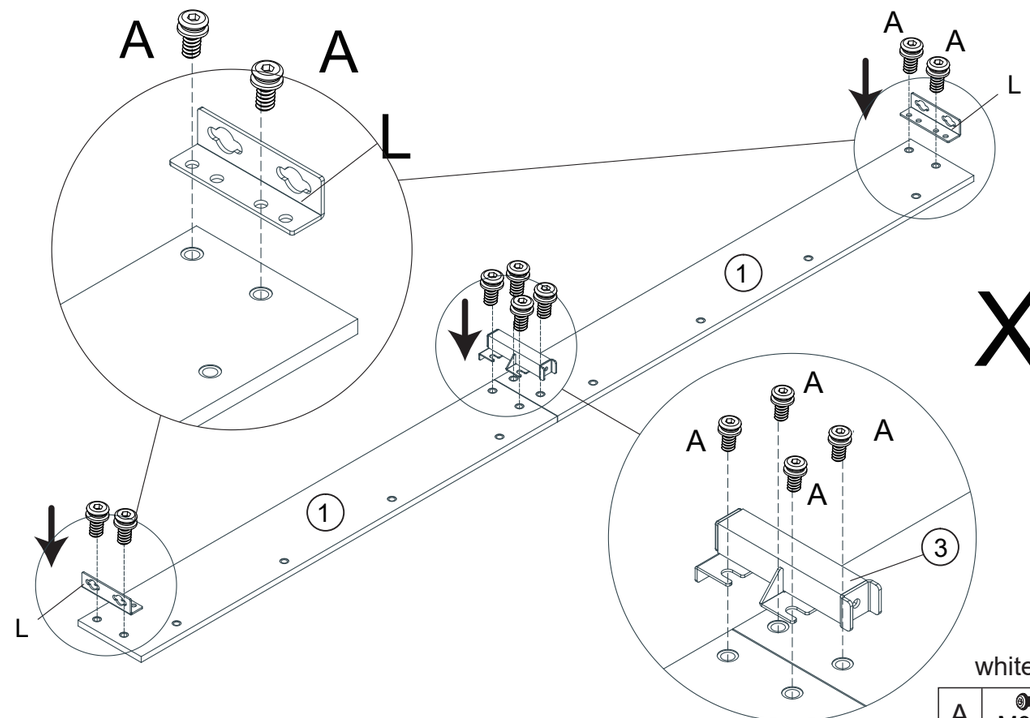
Please tighten screw E that was not tightened in step six during this step.



white zinc

A	M8x12	4PCS
B	M8x20	1PC

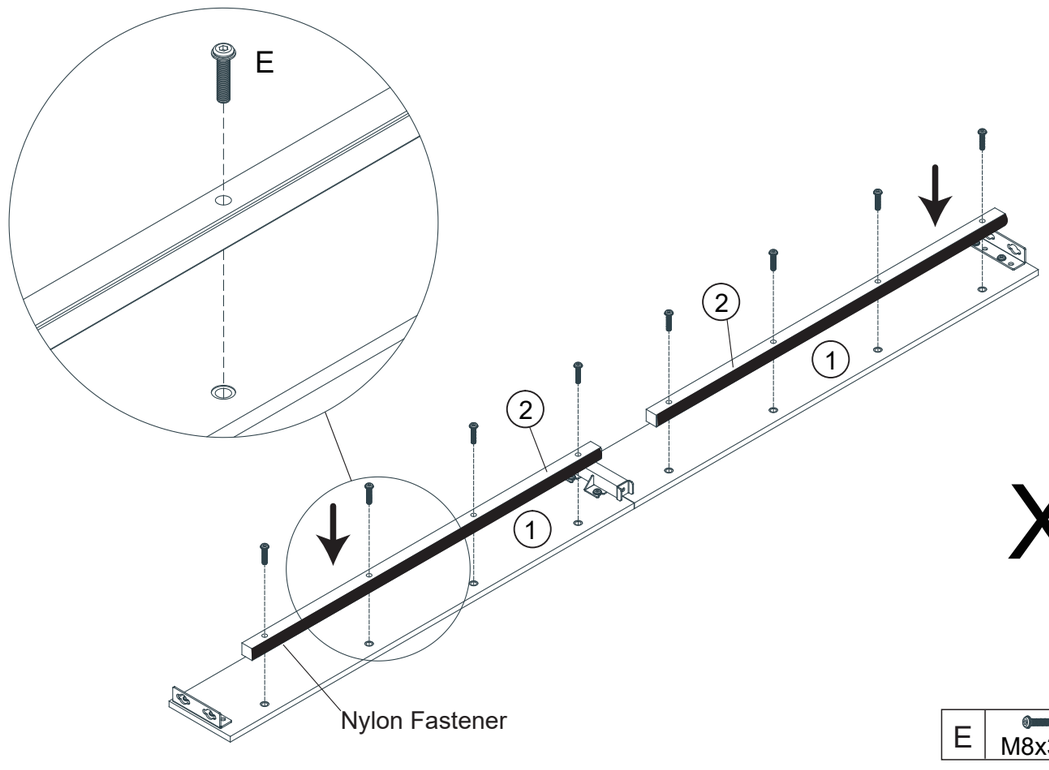
9



white zinc

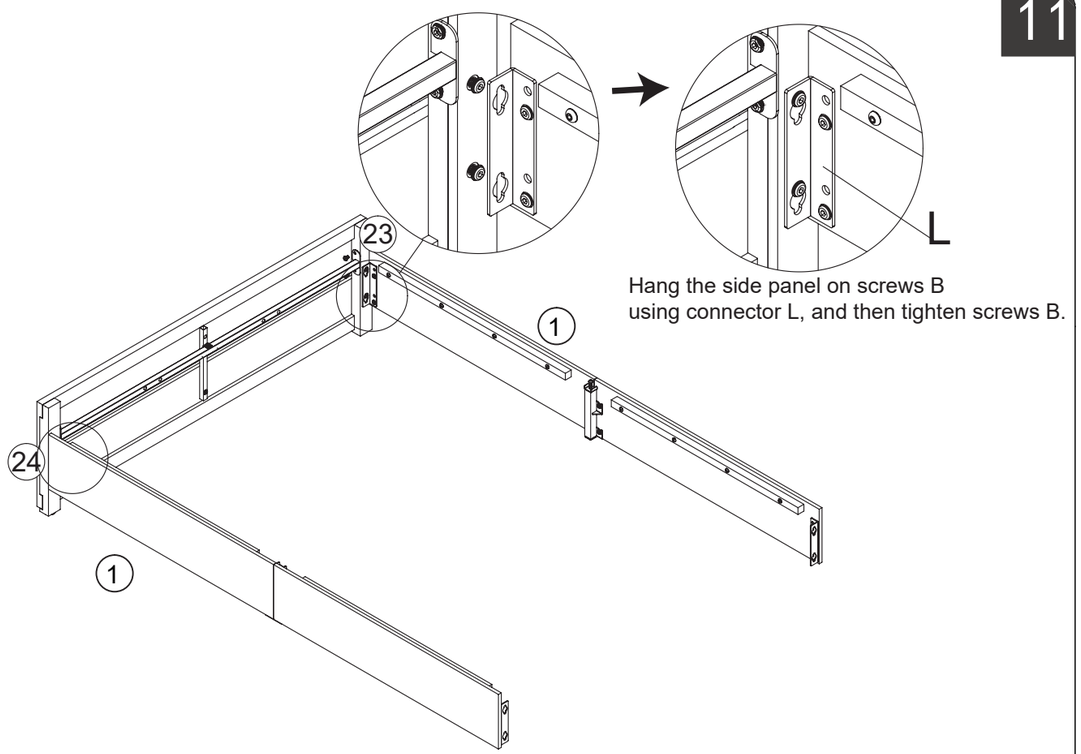
A	M8x12	16PCS

10



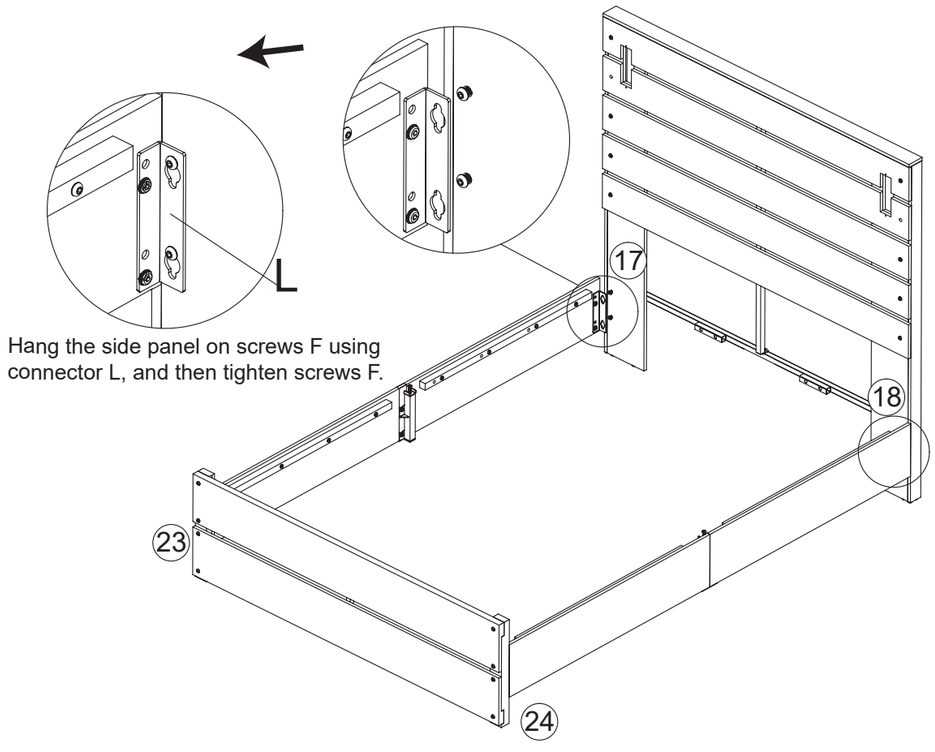
E	M8x35	16PCS

11



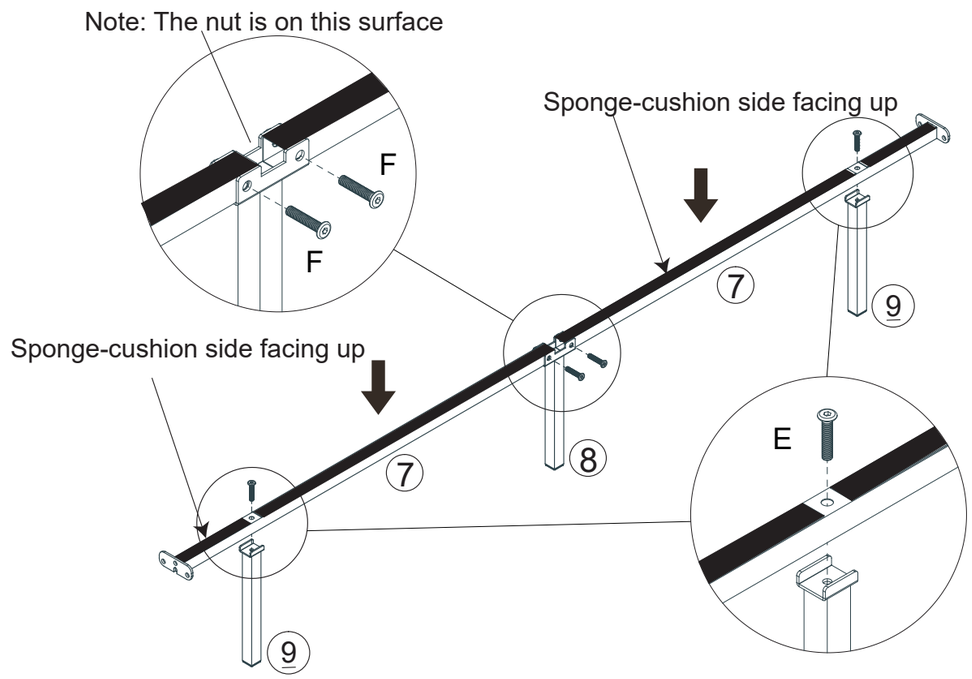
Hang the side panel on screws B
using connector L, and then tighten screws B.

12



Hang the side panel on screws F using
connector L, and then tighten screws F.

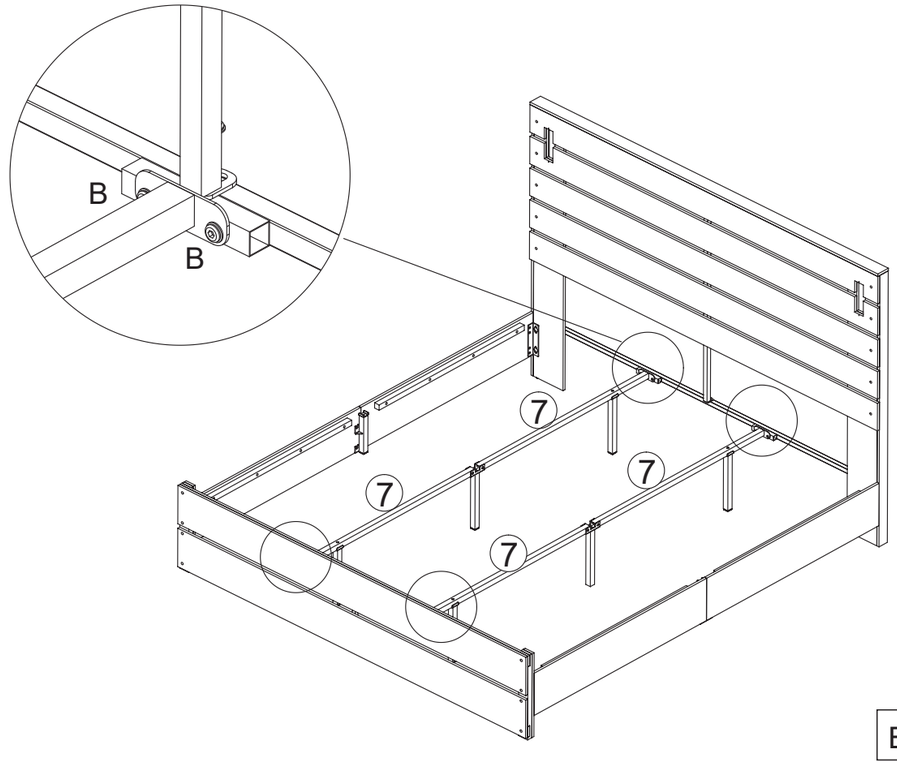
13



X2

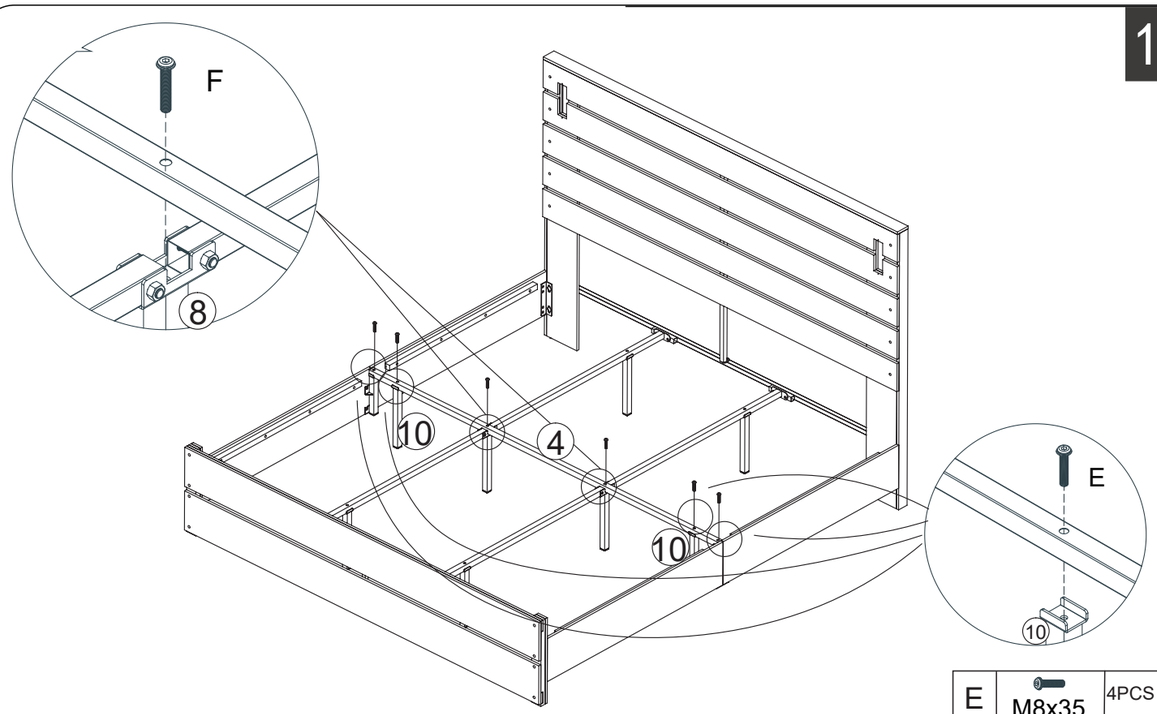
E	M8x35	4PCS
F	M8x50	4PCS

14



B	M8x20	8PCS

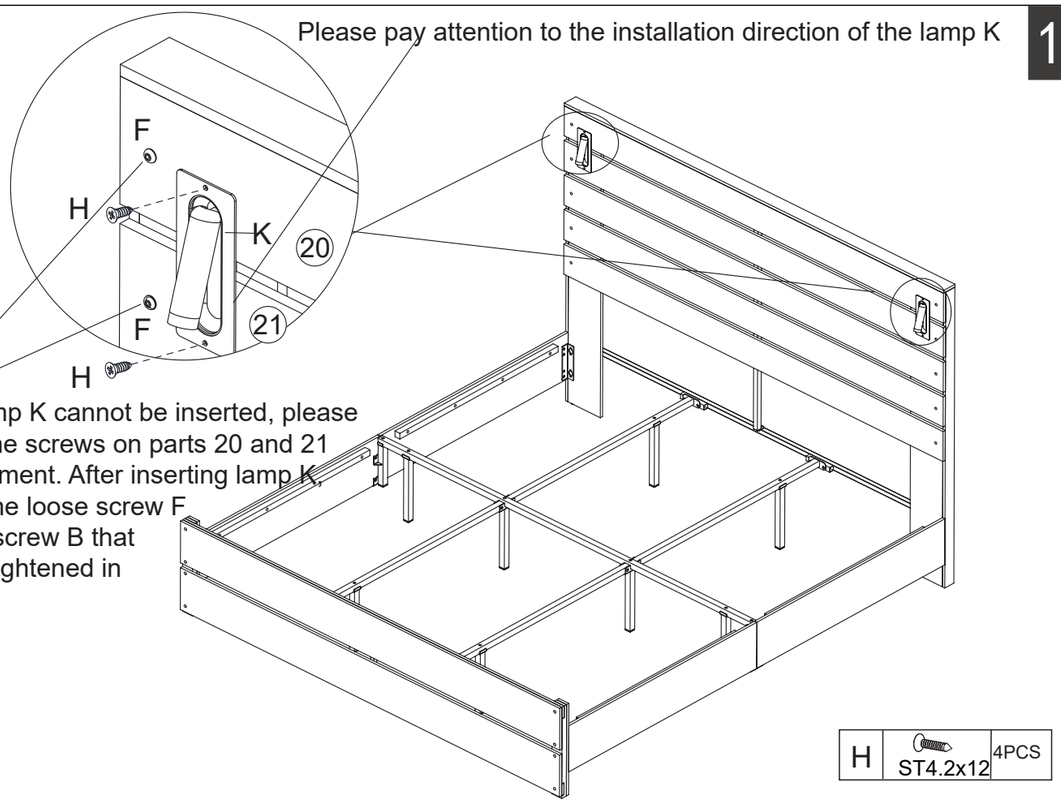
15



E	M8x35	4PCS
F	M8x50	2PCS

16

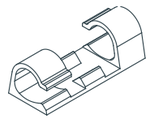
Please pay attention to the installation direction of the lamp K



When lamp K cannot be inserted, please loosen the screws on parts 20 and 21 for adjustment. After inserting lamp K, tighten the loose screw F and the screw B that was not tightened in step four.

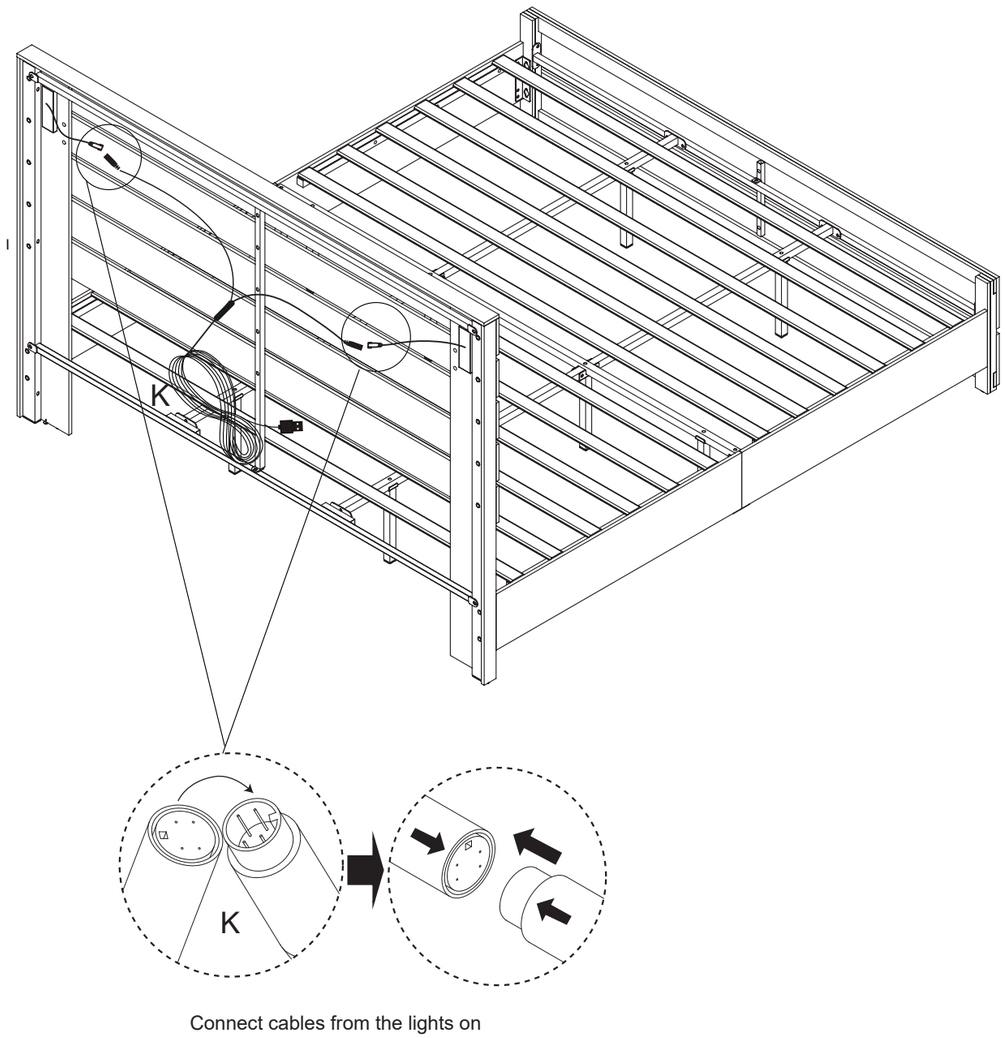
H	ST4.2x12	4PCS

17



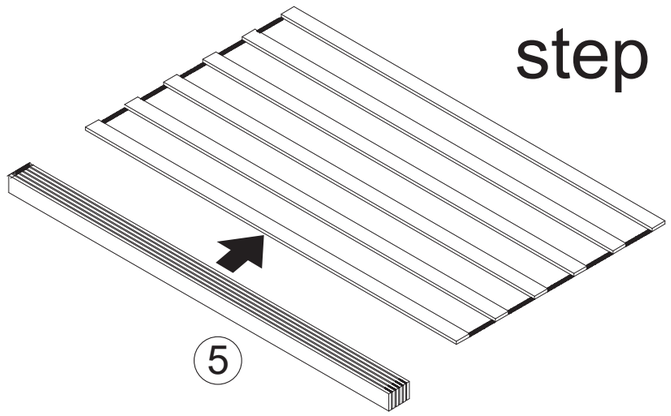
M

Use a line organizer to organize the circuit

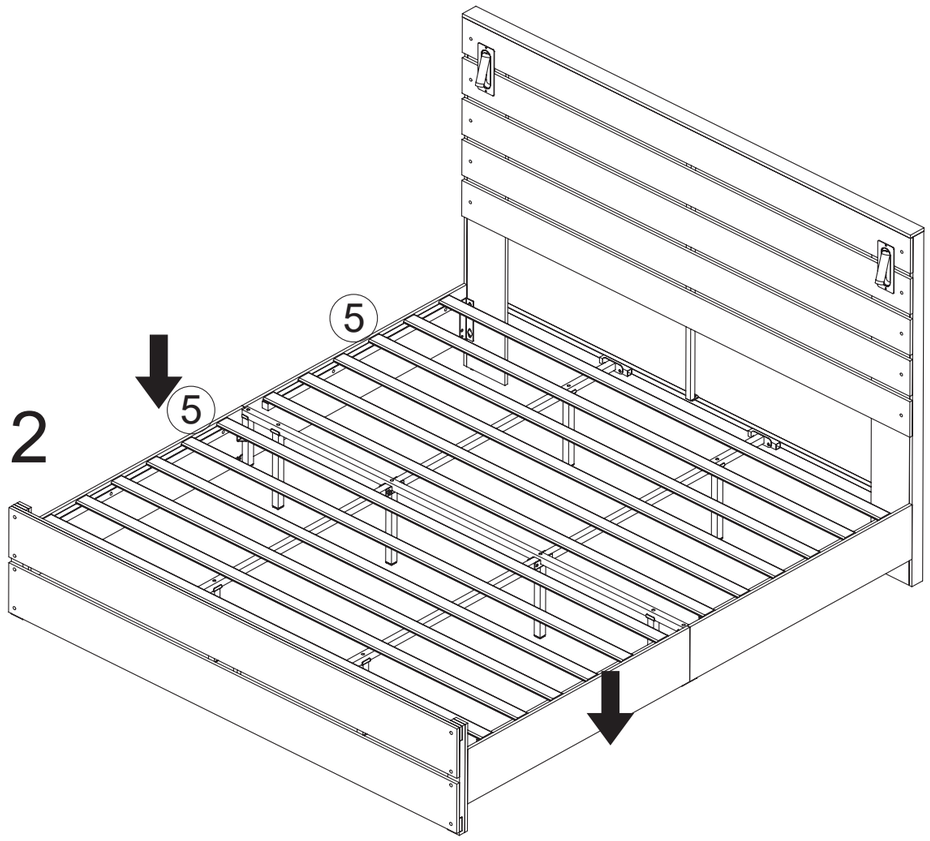


Connect cables from the lights on headboard with one power cable.

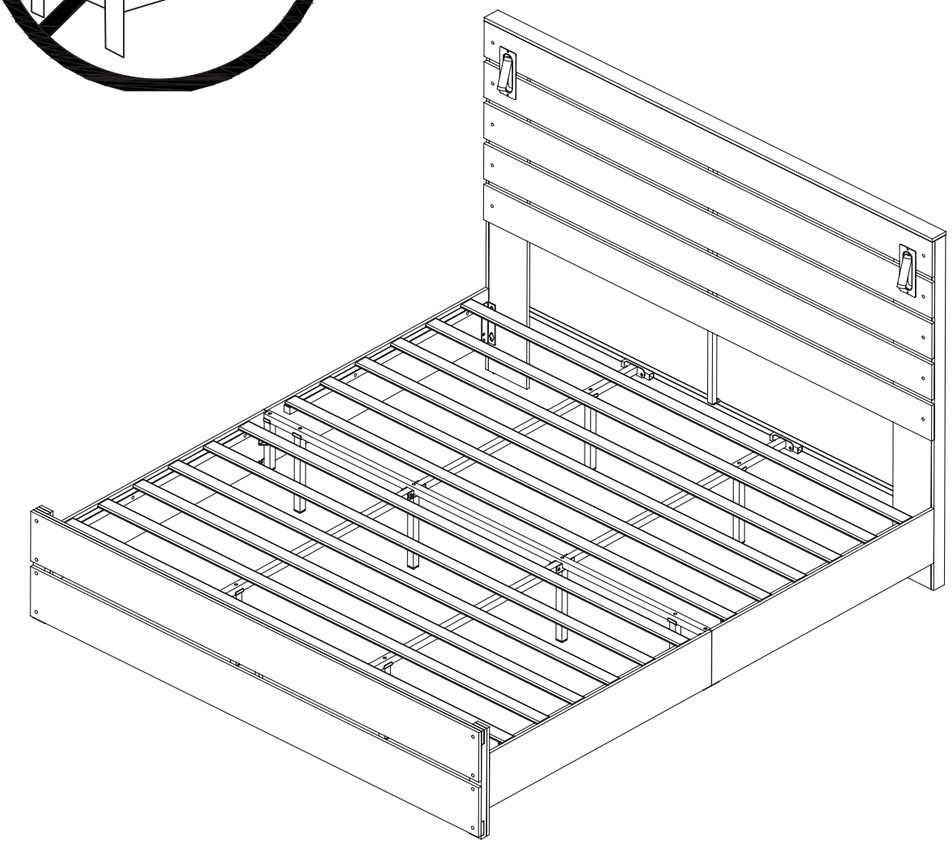
step 1



step 2







Please make sure to check that all screws are tightened after completing the entire installation.

Installation Complete