INSTRUCTION MANUAL ENCLOSED

ATTENTION

IF YOU HAVE ANY PROBLEMS OR QUESTIONS, EMAIL OR CALL CUSTOMER SERVICE BEFORE YOU RETURN THIS PRODUCT TO THE STORE WHERE IT WAS PURCHASED.

When emailing Customer Service, please include your **Order Number and **platform of purchase** in the email subject for quicker assistance.

INSTRUCTION MANUAL ENCLOSED

OUTDOOR SOFA SET

OUTDOOR SOFA SET ASSEMBLY INSTRUCTION

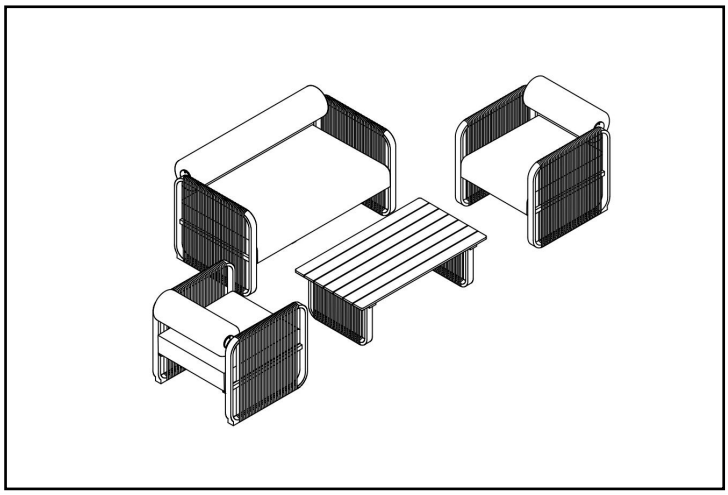

PARTS LIST

Part	Description	Quantity
	PARTS	
A	Armrest Frame	2
B	Seat Frame	1
C	Backrest Frame	1
D	Support Legs	1
	HARDWARE	
E	Bolts M6*25mm	8
F	Bolts M6*35mm	4
G	Bolts M6*20mm	2
H	Washer	10
I	Allen Key	1

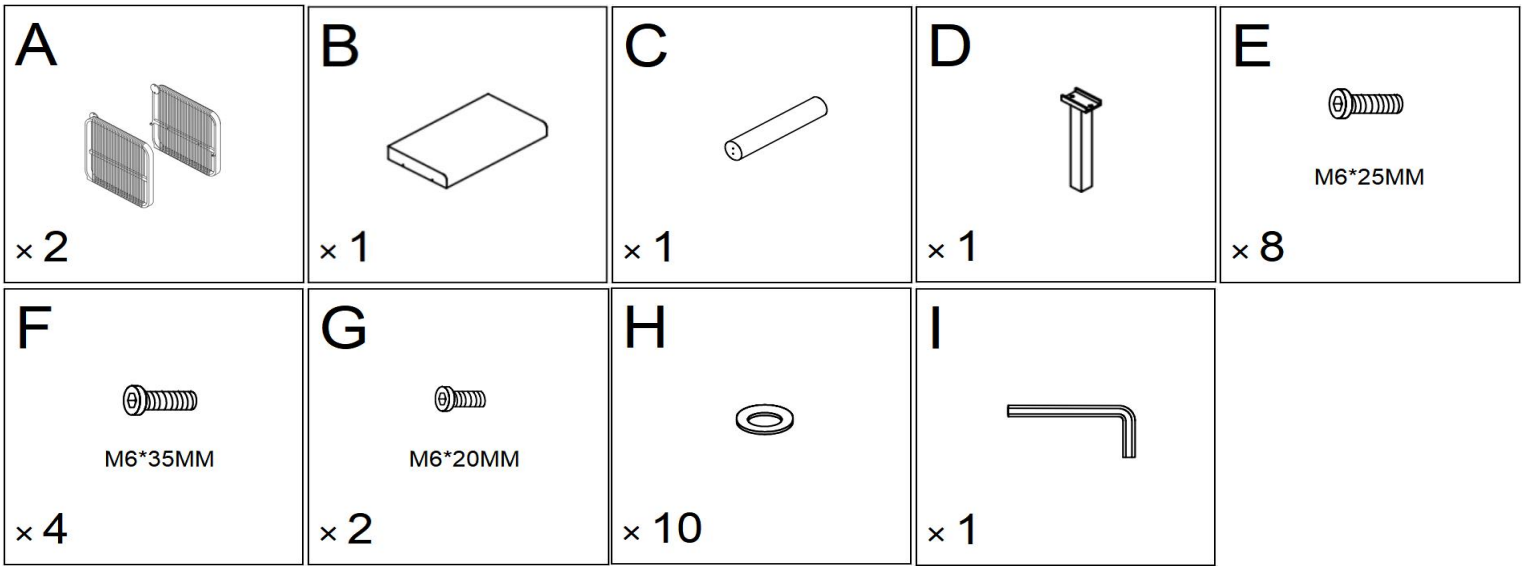

PLEASE READ AND FOLLOW ALL SAFETY TIPS

GETTING STARTED

1. Before assembly, CAREFULLY use scissors or utility knife to cut and unwrap all parts. Make sure you do notdiscard the hardware.
2. Make sure that you have all the parts listed. If you are missing any parts, please email us. Please identify the parts you need and model number. Make sure to include your name and address.
3. Please include your Order Number and platform of purchase in the email subject, and one of our customer service representative will get back to you.
Warm Tips:

1. The plastic covers on some metal parts are just for product protection. Please remove it before assembly.
2. Please follow the sequence of AI during assembly.
3. Do not tighten the screws until all of them are in right positions.

1.Position each Armrest frame(A) to the Seat frame(B) by the pre-drilled threads. Use Allen Key(I) to fasten Bolts(E/F) with Washer(H). As shown in the figure, use a Bolt(E) on one side and Bolt(F) on the other side. It should have 8 bolts fastened. (Photo 1)

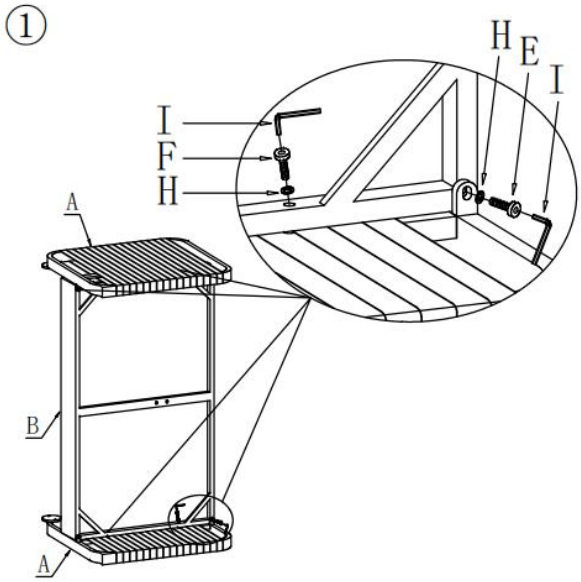

2.Position Support leg(D) to Armrest frame(B) by the pre-drilled threads. Use Allen Key(I) to fasten Bolts(G) with Washer(H). It should have 2 bolts fastened. (Photo 2)

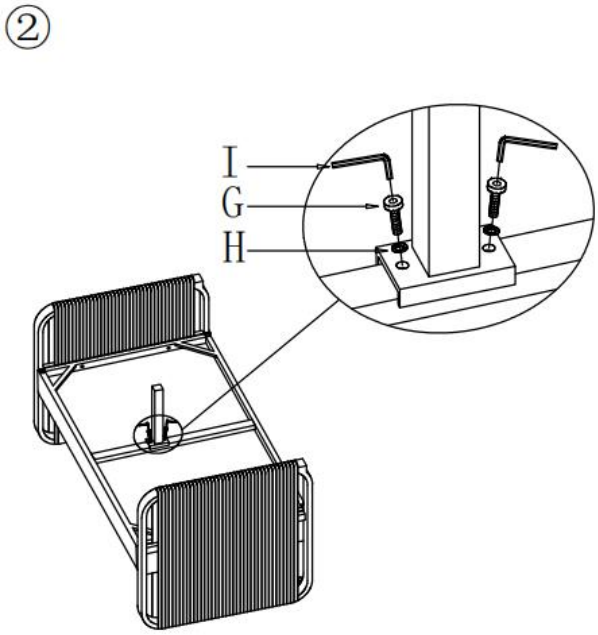

3.Position Backrest frame(C) to Armrest frame(A) by the pre-drilled threads. Use Allen Key(I) to fasten Bolts(E) . It should have 4 bolts fastened. (Photo 3)

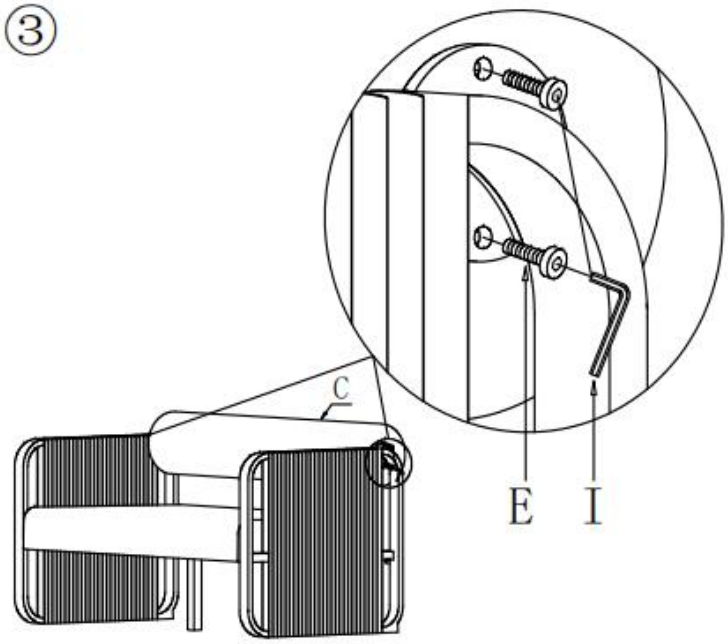

You have completed assembling the furniture – enjoy!

INSTRUCTION MANUAL ENCLOSED

OUTDOOR SOFA SET

OUTDOOR SOFA SET ASSEMBLY INSTRUCTION

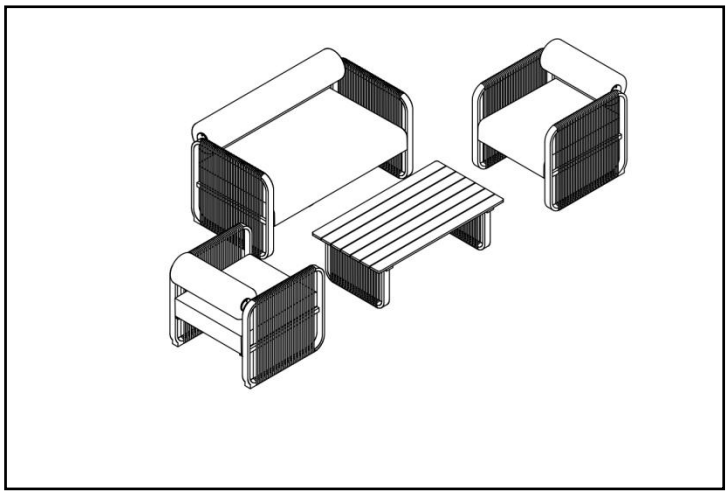

PARTS LIST

Part	Description	Quantity
	PARTS	
A	Armrest Frame	2
B	Seat Frame	1
C	Backrest Frame	1
	HARDWARE	
D	Bolts M6*25mm	8
E	Bolts M6*35mm	4
F	Washer	8
G	Allen Key	1

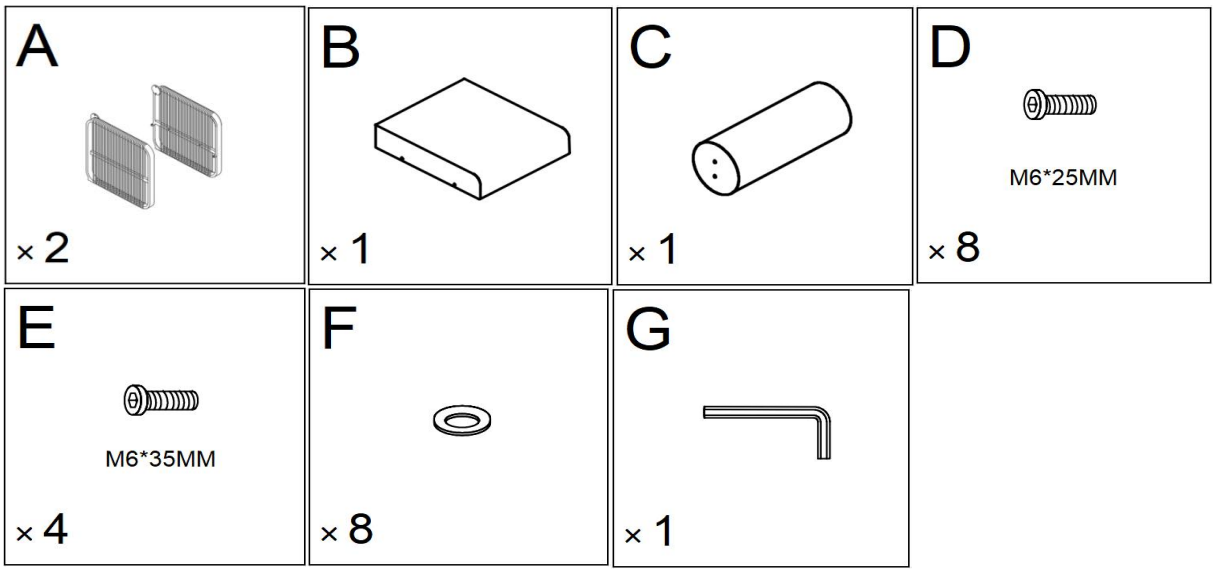

PLEASE READ AND FOLLOW ALL SAFETY TIPS

GETTING STARTED

1. Before assembly, CAREFULLY use scissors or utility knife to cut and unwrap all parts. Make sure you do notdiscard the hardware.
2. Make sure that you have all the parts listed. If you are missing any parts, please email us. Please identify the parts you need and model number. Make sure to include your name and address.
3. Please include your Order Number and platform of purchase in the email subject, and one of our customer service representative will get back to you.
Warm Tips:

1. The plastic covers on some metal parts are just for product protection. Please remove it before assembly.
2. Please follow the sequence of AI during assembly.
3. Do not tighten the screws until all of them are in right positions.

1.Position each Armrest frame(A) to the Seat frame(B) by the pre-drilled threads. Use Allen Key(G) to fasten Bolts(D/E) with Washer(F). As shown in the figure, use a Bolt(D) on one side and Bolt(E) on the other side. It should have 8 bolts fastened. (Photo 1)

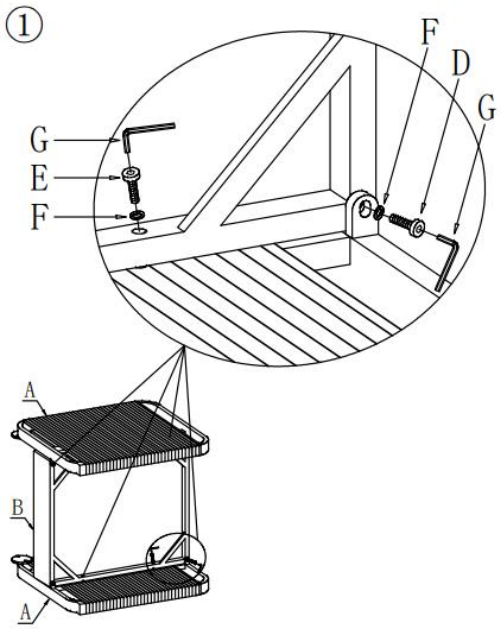

2.Position Backrest frame(C) to Armrest frame(A) by the pre-drilled threads. Use Allen Key(G) to fasten Bolts(D). It should have 4 bolts fastened. (Photo 2)

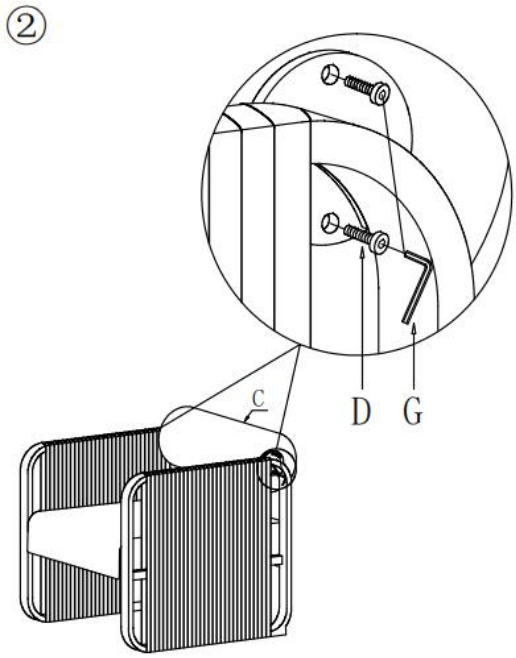

You have completed assembling the furniture – enjoy!

INSTRUCTION MANUAL ENCLOSED

OUTDOOR SOFA SET

OUTDOOR SOFA SET ASSEMBLY INSTRUCTION

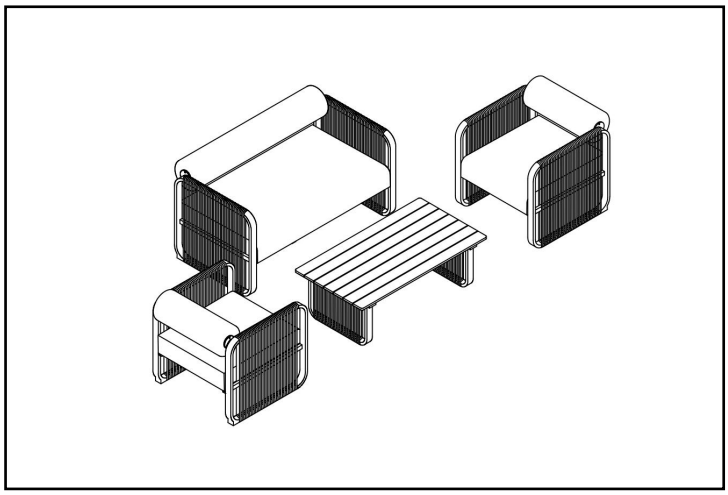

PARTS LIST

Part	Description	Quantity
	PARTS	
A	Table Top	1
B	Table Frame	2
	HARDWARE	
C	Bolts M6*35mm	8
D	Washer	8
E	Allen Key	1

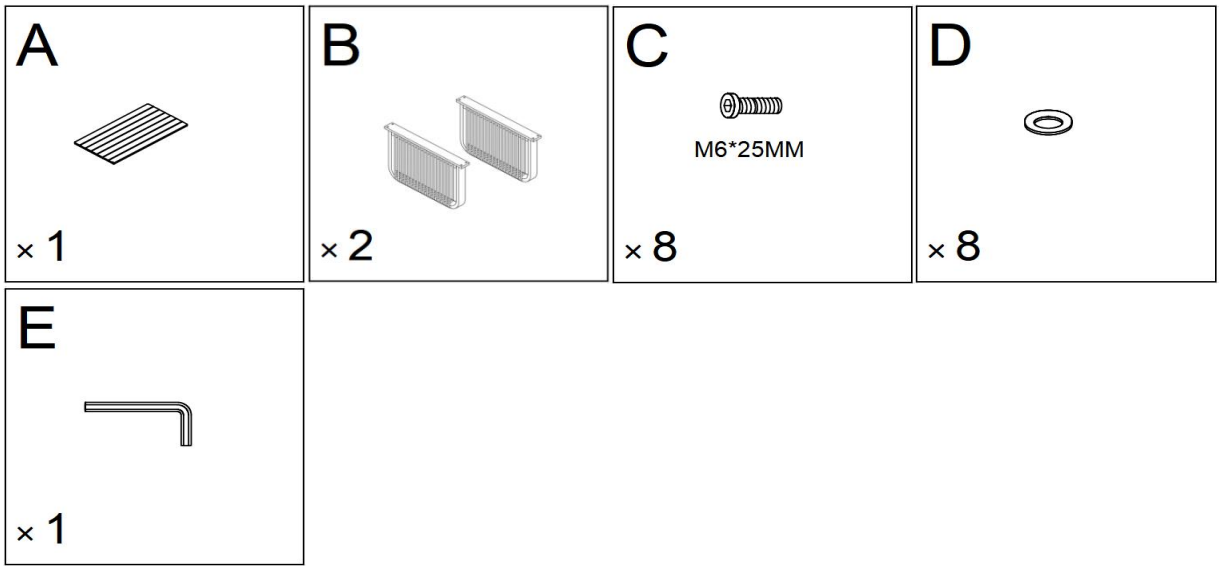

PLEASE READ AND FOLLOW ALL SAFETY TIPS

GETTING STARTED

1. Before assembly, CAREFULLY use scissors or utility knife to cut and unwrap all parts. Make sure you do notdiscard the hardware.
2. Make sure that you have all the parts listed. If you are missing any parts, please email us. Please identify the parts you need and model number. Make sure to include your name and address.
3. Please include your Order Number and platform of purchase in the email subject, and one of our customer service representative will get back to you.
Warm Tips:

1. The plastic covers on some metal parts are just for product protection. Please remove it before assembly.
2. Please follow the sequence of AI during assembly.
3. Do not tighten the screws until all of them are in right positions.

1.Position each Table leg(B) to the Table top(A) by the pre-drilled threads. Use Allen Key(E) to fasten Bolts(C) with Washer(D). It should have 8 bolts fastened. (Photo 1)

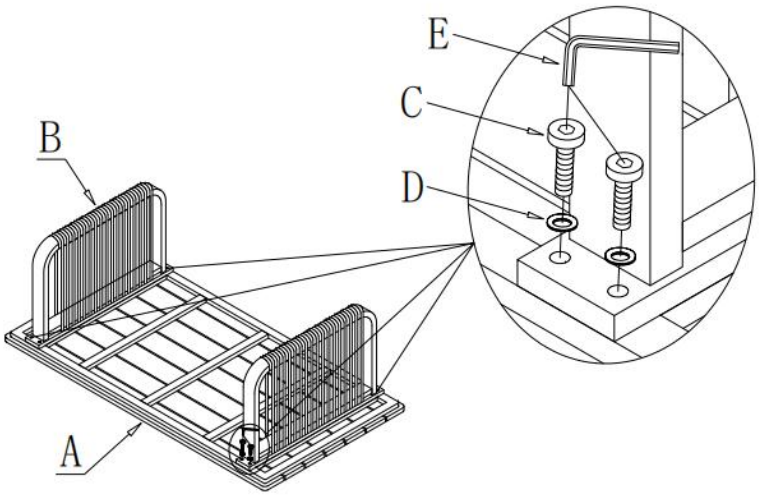

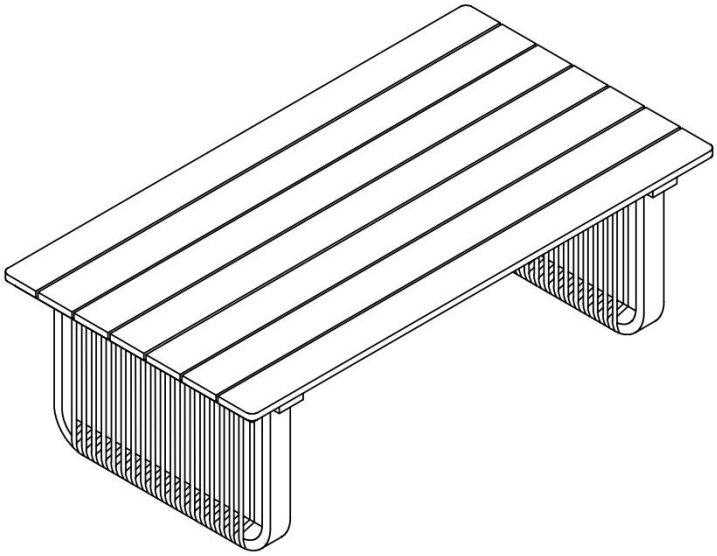

You have completed assembling the furniture – enjoy!