ASSEMBLY INSTRUCTION FOR

DINING TABLE

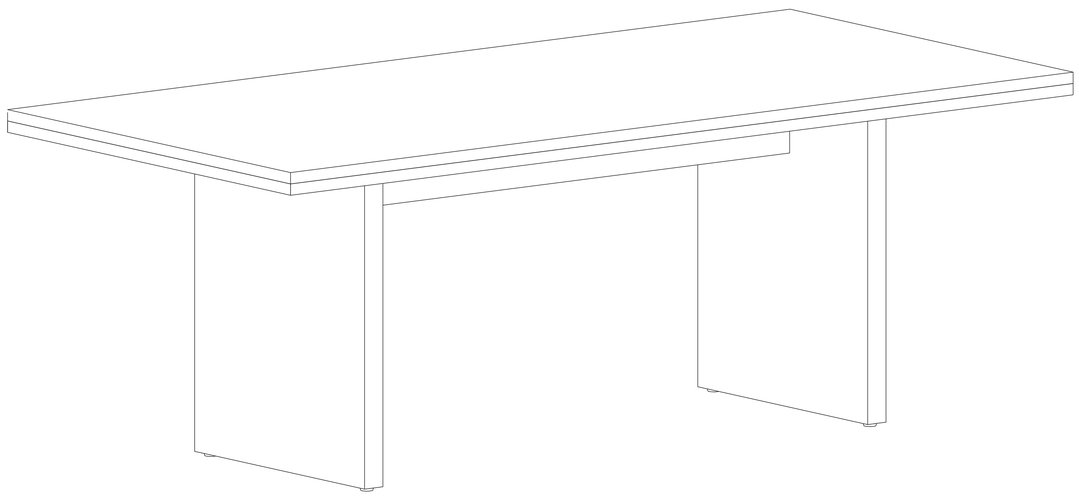

Hardware List

A		Bolt	8x40mm	14
B		Bolt	8x60mm	2
C		Bolt	6x40mm	6
D		Flat Washer	6x16x2mm	6
E		Flat Washer	8x19x2mm	14
F		Spring Washer	8x19mm	14
G		Half Moon Washer		2
H		Wooden Dowel	10x40mm	6
I		Allen Key	4mm	1

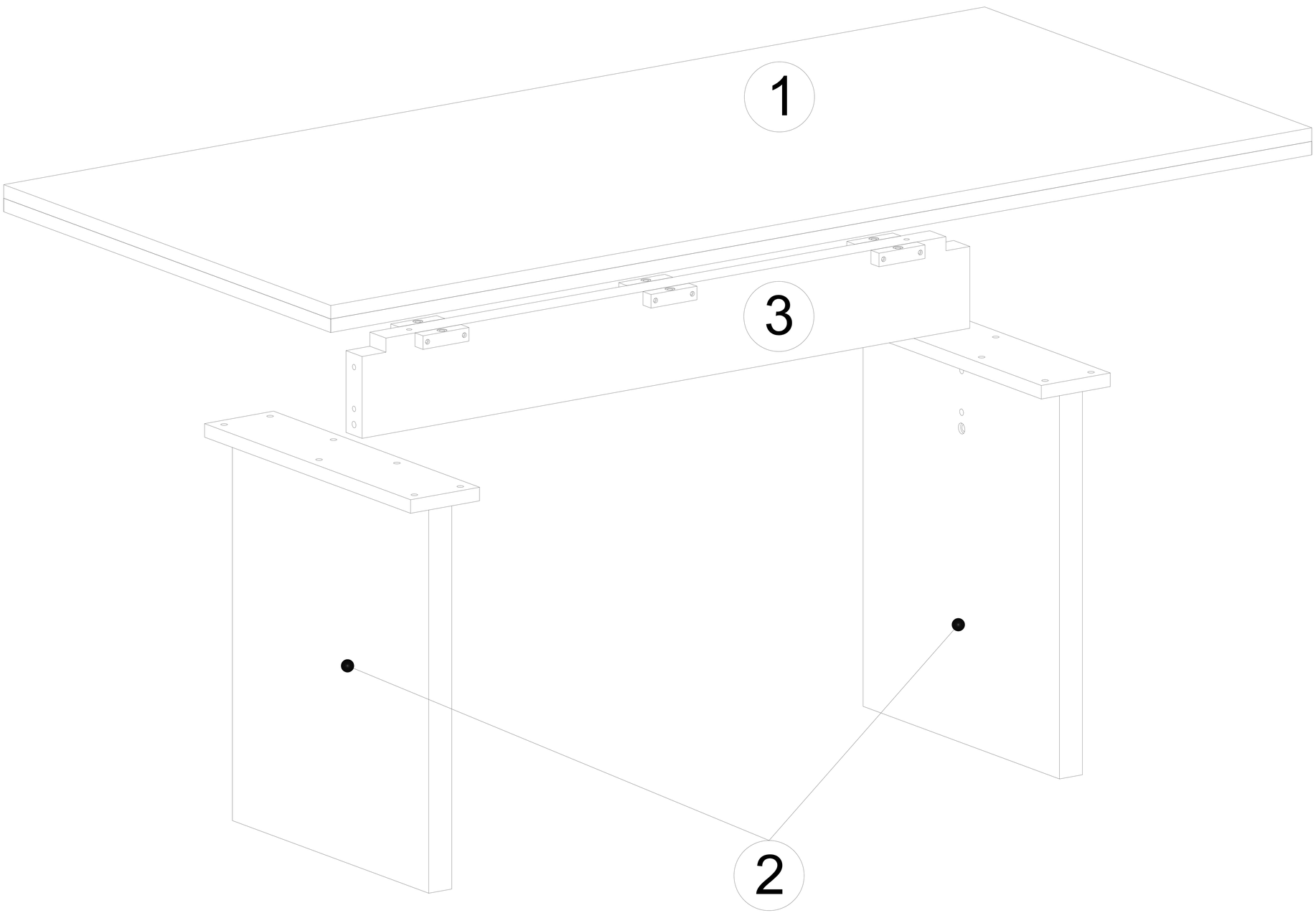

Made in Vietnam

Step 1

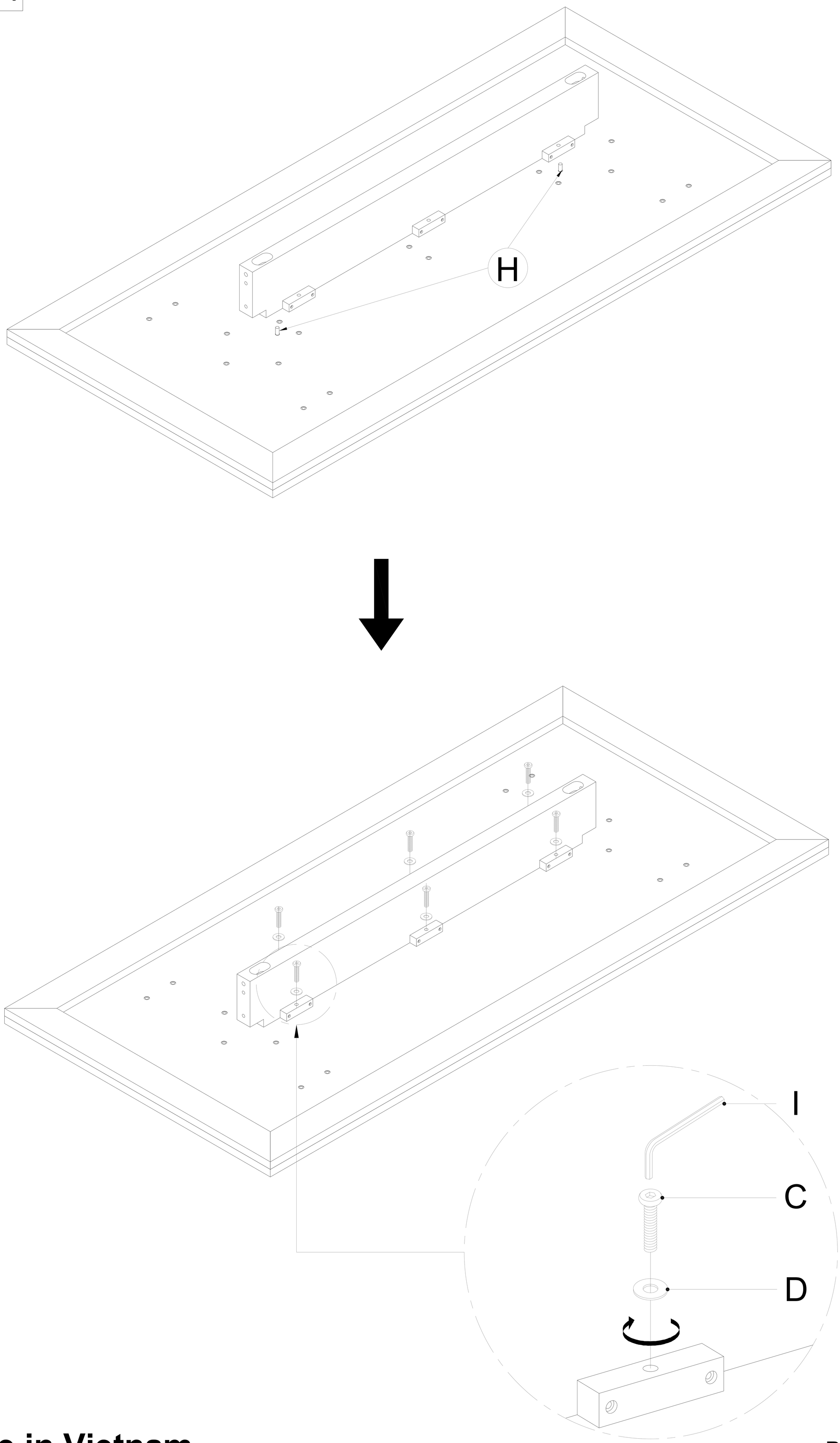

Made in Vietnam

Step 2

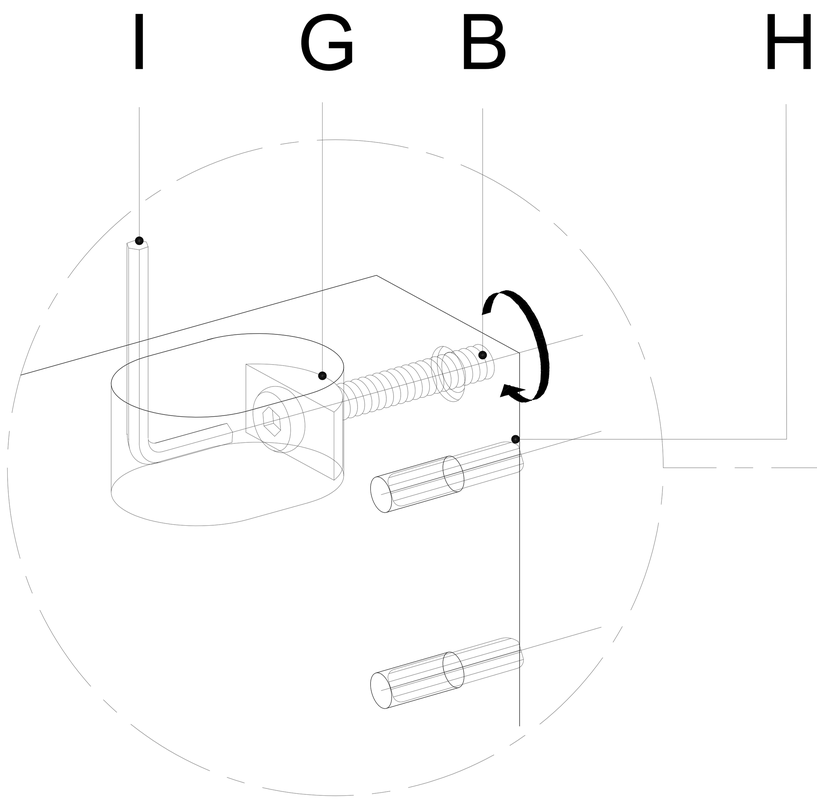

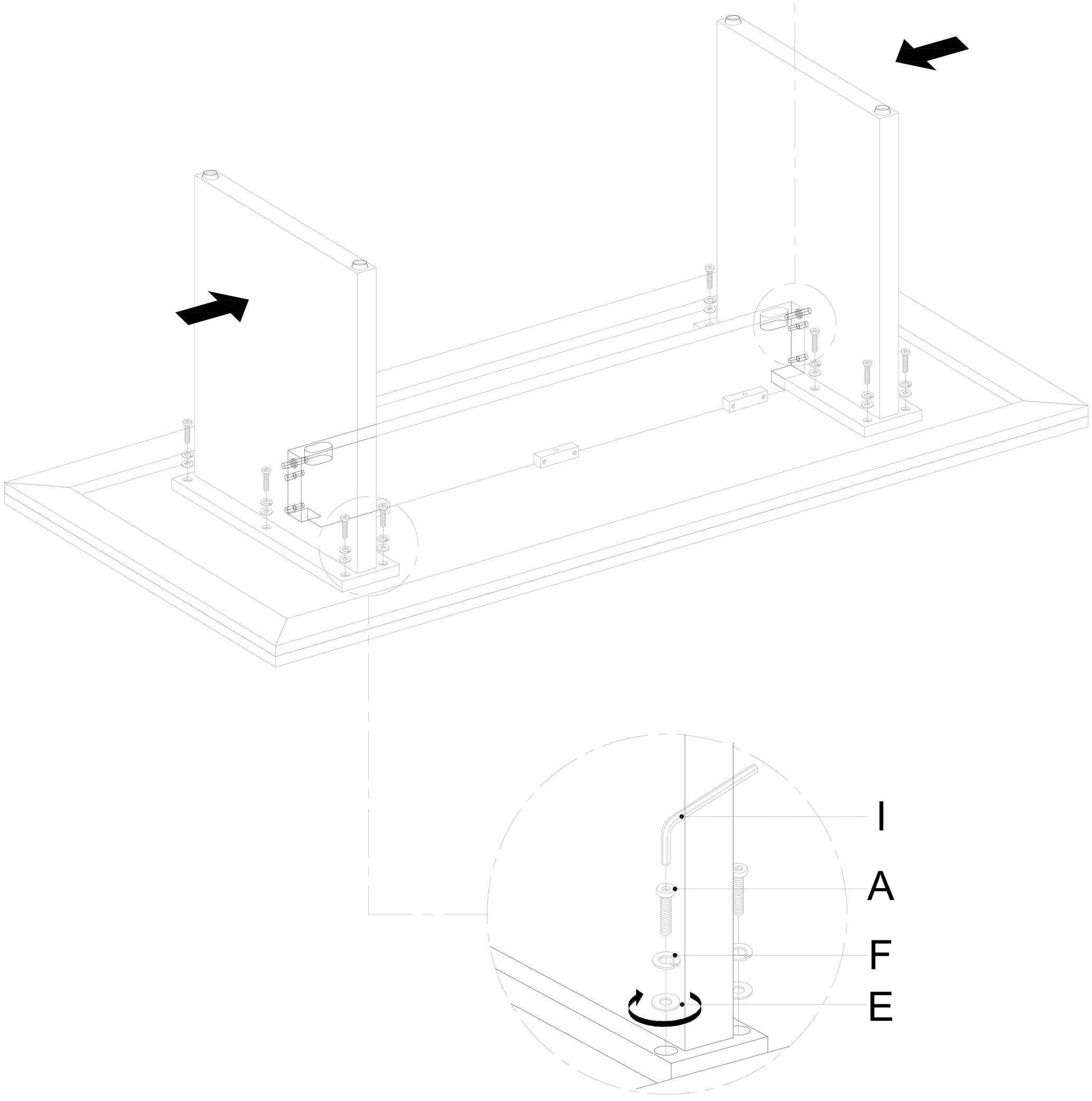

Made in Vietnam

Step 3

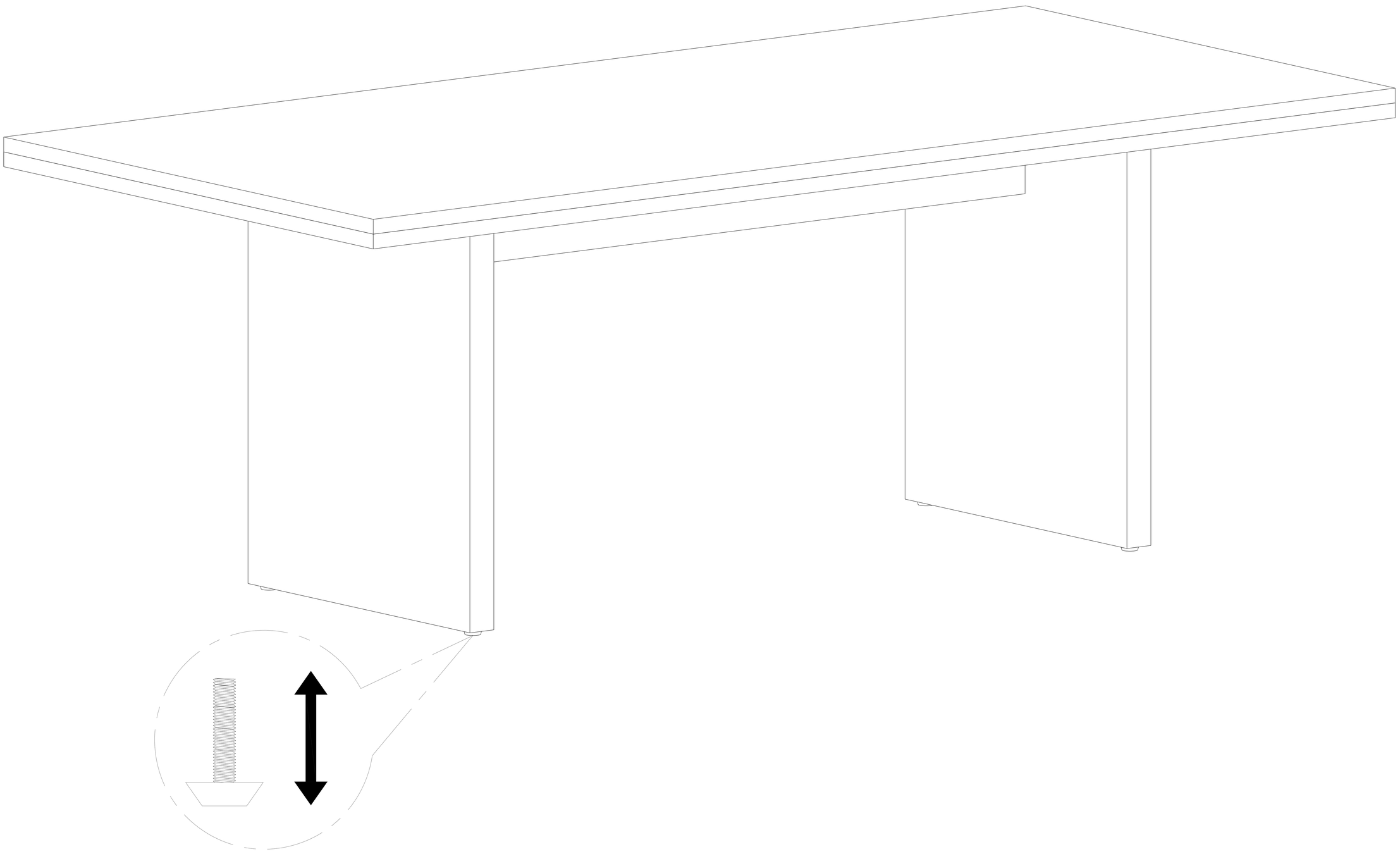

Made in Vietnam